Sundstrand Data Control, Inc.
REDMOND, WASHINGTON 98052
subsidiary of Sundstrand Corporation

GROUND PROXIMITY WARNING COMPUTER

PART NUMBER 965-0376-070
965-0376-071
965-0376-072
965-0376-073
965-0376-079
965-0376-081
965-0376-087

COMPONENT MAINTENANCE MANUAL
WITH
ILLUSTRATED PARTS LIST

THE FOLLOWING PAGES ARE MISSING:

1046 (Fig 2, Sheet 2-2)
1086 (Fig 8, Sheet 2-2)
1087 to 1098.10

DOCUMENT NO. 012-0226-001

PROPRIETARY INFORMATION

THE DEVICE DESCRIBED HEREIN IS MANUFACTURED UNDER U.S. PAT NO. 3715318 WITH OTHER PATENTS PENDING AND IS A PROPRIETARY PRODUCT OF SUNDSTRAND DATA CONTROL, INC. THIS DOCUMENT IS PROVIDED TO THE ADDRESSEE FOR THE COMPONENT MAINTENANCE INFORMATION CONTAINED HEREIN, AND SHALL NOT BE DISCLOSED OUTSIDE OF THE ADDRESSEE WITHOUT THE EXPRESS WRITTEN PERMISSION OF SUNDSTRAND DATA CONTROL, INC. IN THE EVENT THIS DOCUMENT, OR PORTIONS THEREOF, ARE INCORPORATED IN A CONTRACTUAL AGREEMENT, THIS LEGEND SHALL NOT BE MODIFIED EXCEPT IN ACCORDANCE WITH PROVISIONS OF SUCH CONTRACT.

34-45-08
Dec 1/75
Rev. 2: Nov 30/76

Sundstrand Data Control, Inc.
unit of Sundstrand Corporation

OVERLAKE INDUSTRIAL PARK · REDMOND, WASHINGTON 98052 · PHONE 206/885-3711 · TWX 910/449-2860 · TELEX 32-0313

November 30, 1976

TO: HOLDERS OF COMPONENT MAINTENANCE MANUAL - GROUND PROXIMITY WARNING COMPUTER, PART NO. 965-0376-070/071/072/073/079/081/087, DOCUMENT NO. 012-0226-001, ATA 100, NO. 34-45-08.

REVISION NO. 2 DATED NOV. 30, 1976

Pages which have been revised are outlined below together with highlights of the revision. Please remove and/or insert affected pages noted below and enter Revision 2 and insertion data on the record of revision pages.

PAGE NO.	DESCRIPTION OR CHANGE	EFFECTIVITY
Front Matter	Updated to revision 2.	All
2	Fig. 2: Weight was "7.2 pounds approximate".	All
	Input power was "115 vac, 400 Hz, single phase, less than 20 watts."	All
26	Para. (11), Gate U2D: "below 1000 feet" was "above 1000 feet".	All
103	Added ATLAS program reference for 965-0376-081 to last paragraph.	Model 081
116	Step (j), model 087, 2nd line: "-0.724 to -0.726 vdc" was -0.720 to -0.730 vdc".	Model 087
117	Step (1), model 087, 2nd line: "-0.899 to -0.901 vdc" was -0.89 to -0.91 vdc.	Model 087
124	Step (18)(a): Move "set PROGRAM MODE 4 switch to OFF" from step (18)(a) to last sentence of step (18)(b).	All
132	Step (27)(a), 4th sentence: Changed "connect the DVM (+) lead to TP-22 and multimeter (+) lead to ATE 17." to "Connect the DVM (+) lead to TP-22, except if testing model 081 connect to BP-32. Connect multimeter (+) lead to ATE 17.	Model 081

PAGE NO.	DESCRIPTION OR CHANGE	EFFECTIVITY
132 (cont')	Step (27)(a), 8th line: Added "(at TP-22)" after DVM.	All, except Model 081
	Step (27)(a), 10th line: Added "The DVM (at BP-32) shall indicate ----." to last sentence.	Model 081
	Step (27)(b), 4th line: Added "The DVM (at BP-32) shall indicate ----."	Model 081
	Step (27)(c), 4th line: Added "(at TP-22)" after DVM.	All, except Model 081
	Step (27)(c), 5th line: Added "The DVM (at BP-32) shall indicate ----."	Model 081
	Step (27)(d), 3rd line: Added "(at TP-22)" after DVM.	All, except Model 081
	Step (27)(d), 4th line: Added "The DVM (at BP-32) shall indicate ----.".	Model 081
133	Deleted "NOTE: For model 081 only, verify DC content of signal generator output is less than ±0.2 vdc." that preceded step (c).	Model 081
	Step (i): Last 2 sentences were "Disconnect scope from tester for all models, except model 081. Set the GAIN switch to LO."	All
140	Step (36)(f): Added second sentence.	All, except Models 070 and 087.
143	Step (g), 3rd sentence: Deleted Model 070 from underlined models.	Model 070
158	Step (i), 2nd sentence: -0.724 to -0.726 was -0.720 to -0.740.	Model 087
	Step (k), 2nd sentence: -0.899 to -0.901 should be -0.89 to -0.91.	Model 087

Sundstrand Data Control, Inc.
unit of Sundstrand Corporation

OVERLAKE INDUSTRIAL PARK · REDMOND, WASHINGTON 98052 · PHONE 206/885-3711 · TWX 910/449-2860 · TELEX 32-0313

PAGE NO.	DESCRIPTION OR CHANGE	EFFECTIVITY
198.41	Step (l), 5th sentence: -0.724 to -0.726 was -0.72 to -0.74.	Model 087
	Step (n), 3rd and 4th sentences: -0.899 to -0.901 was -0.89 to -0.91.	Model 087
198.73	Step (2)(i), 2nd sentence: -0.724 to -0.726 was -0.720 to -0.740.	Model 087
198.74	Step (k), 2nd sentence: -0.899 to -0.901 was -0.89 to -0.91.	Model 087
198.125	Fig. 112, BARO INHIBIT function: Wire from J3-X to J7-15 was J3-X to J11-20. All units comply.	All
198.130 198.134	Fig. 113: Added P1-KK, TO function. CR5 was CR3. All units comply.	All
198.134	Fig. 113: Added P1-KK, TO function. All units comply.	All
198.156 198.160	Pin 13 U5-Q1 was U5-$\overline{Q1}$ and pin 12 U5-$\overline{Q1}$ was U5-Q1. Illustration error.	All
198.161 198.162	A1 connector designations P1 and P2 were reversed.	All
198.217	Step E(3): -0.012 to +0.004 vdc was -12 to +4 vdc.	All
198.218	Step (1)(1): Second sentence add word "to".	All
	Step (2)(a): Added first sentence.	All
198.219	Step (3)(d), 2nd line: +4.307 to +4.671 was +4.601 to +4.965.	All, except Model 087
	Step (3)(h): Added last sentence.	All
198.221	Step (5)(c), 2nd line: +16.945 to +17.565 was +17.169 to +17.790.	All
	Step (5)(g) and (5)(i): Added first sentence to each step.	All
198.313	Step (71): Added last sentence.	All
305	Added ATA 34-45-08 to page.	
1013	A4A2R32 was Fig. 11 item 90.	Model 073
1022	RCR05G203JS: Quantity of 11 190 was 4.	Model 073

PAGE NO.	DESCRIPTION OR CHANGE	EFFECTIVITY
1029	722-1782-001 was -002.	Model 073
1098.2	R32 was item 90.	Model 073
1098.3	Item 90: Units per assembly was 6.	Model 073
1098.4	Item 190: Units per assembly was 4.	Model 073

PAGE NO.	DESCRIPTION OF CHANGE	EFFECTIVITY
198.68	In step (42)(b), 0.9 was 0.8 and added (0 vdc).	All
198.138	Added revision 1 to schematic revision sheet.	All
198.140/.141	Added NOTE 5 and CR33. Part No. 722-1757-004 was 722-1757-001.	Models -070,-071, -072,-073,-079, -081.
198.144/.145	Added NOTE 6 and CR33. Part No. 722-1757-005 was 722-1757-003. R122 was 137K, R120 was 13K, R162 was 13K.	Model -087
198.148	Added revision 1 to schematic revision sheet.	All
198.150/.151	R49 and R71 wer 20K.	All
198.154	Added revision 1 to schematic revision sheet.	All
198.156/.157	Deleted CR5, CR15 was R8, R17 was 220 ohms, R9 was 6.98K, R67 was 2.4K and Q1 was 2N3250.	Model -073,-079
	Part No. 722-1763-007 was 722-1763-004.	Model -073
	Part No. 722-1763-009 was 722-1763-006.	Model -079
198.160/.161	Deleted CR5,CR15 was R8, R17 was 220 ohms, R9 was 6.98K, R67 was 2.4K and Q1 was 2N3250. Part No. 722-1763-008 was 722-1763-005.	Model -070,-071 -072,-081,-087
198.164	Added revision 1 to schematic revision sheet	Model -073.
198.165	Added transistor identification to note 2.	Model -073.
198.168	Added revision 1 to schematic revision sheet.	All
198.170	R16 was 68K, R17 was 130K, R18 was 110K.	All
198.172	Added revision 1 to schematic revision sheet.	All
198.174	In note 7, Part No. 722-1761-006 was 722-1761-004.	Model -070, -087
198.175	A6A1R1 was 100K.	All

PAGE NO.	DESCRIPTION OF CHANGE	EFFECTIVITY
198.184	Added revision 1 to schematic revision sheet.	All
198.185	Added terminal numbers E9 thru E14 to 722-1770-001 diagram. Added diagram for Part No. 722-1770-002.	All
198.191	In step D.(3), added "If not, adjust COMP 115 VAC INPUT control for 114 to 116 vac. External power source may have to be increased. If so, do not exceed 120 vac".	All
198.194	In step (p), until scope drops to about 0 vdc was the TC light goes off. Added "The light shall go off" to end of step.	All
198.196	In step (f), 1 and 3 (flashing) lights are on was 1 and 3 lights are on.	Model -087
	In step (i), until scope drops to about 0 vdc was and the change in scope display.	All
198.197	In step (9)(c), until scope goes to about +28 vdc was and the change in scope display.	All
198.198	In steps (e) and (l), until scope goes to about 0 vdc was and the change in scope display.	All
198.200	Added "Remove scope trigger lead from fixture K jack and" to step (c).	All
	In step (e), until scope goes to about +28 vdc was and the change in scope display.	All
	In step (g), until scope drops to about 0 vdc was and the change in scope display.	All
198.202	Added "and 4.D.(1)" to step F.(1)	All
198.218	In step (2)(a), Part No. 722-1757-004 was 722-1757-001 and 722-1757-005 was 722-1757-003.	All

PAGE NO.	DESCRIPTION OF CHANGE	EFFECTIVITY
198.219	In steps (2)(b), (3)(b), (3)(d), (3)(f), (3)(i) and (3)(j), Part No. 722-1757-004 was 722-1757-001 and 722-1757-005 was 722-1757-003.	All
	In step (3)(b), +9.931 to +10.445 was +10.414 to +10.948. In step (3)(d), +4.601 to +4.965 was +4.334 to ±4.682. In step (3)(f), +2.352 to +2.717 was +2.383 to +2.727. In step (3)(i), +4.801 to +5.233 was +5.044 to +5.540. In step (3)(j), +8.731 to +9.399 was +9.685 to +10.329.	Models -070, -071,-072, -073,-079, -081.
	In step (3)(h), Verify that TC light is on for Part No. 722-1757-004 or off for 722-1757-005 was Verify that TC light is off.	All
198.220	In steps (4)(a),(4)(d),(4)(g) and (4)(i), Part No. 722-1757-004 was 722-1757-001 and 722-1757-005 was 722-1757-003.	All
	In step (a), +3.995 to +5.561 was +4.198 to +5.774. In step (d), +16.361 to +17.391 was +16.818 to +17.887. In step (g), +20.716 to +21.534 was +21.168 to +22.203. In step (i) +24.365 to +25.490 was +25.081 to +25.915.	All
	In step (h), +25.55 was +25.25.	All
198.221	In step (5)(b), +0.087 to +0.263 was +0.2 to +0.6.	All
	In step (6)(a), light just goes off.,was light goes off.	All
198.222	In step (7)(b), +1.315 was +1.1315.	All
198.223	In steps (9)(a) and (9)(c), Part No. 722-1757-004 was 722-1757-001 and 722-1757-005 was 722-1757-003.	All
	In step (9)(a), SYN VAL switch to $\overline{\text{VAL}}$ was SYN VAL switch to VAL.	All

PAGE NO.	DESCRIPTION OF CHANGE	EFFECTIVITY
198.224	In step (10), Part No. 722-1757-004 was 722-1757-001.	Models -070, -071,-072, -073,-079, -081.
	In step (11), Part No. 722-1757-005 was 722-1757-003.	Model -087.
198.225	Deleted "and COMP PWR switch" from step (14).	All
198.232/.232	Part No. 722-1757-004 was 722-1757-001 and 722-1757-005 was 722-1757-003.	All
198.241	Added "If not, adjust COMP 115 VAC INPUT control for 114 to 116 vac. External power source may have to be increased. If so, do not exceed 120 vac". to step D.(3).	All
198.262/.263	In steps (5)(a) and (5)(j), Part No. 722-1763-007 and -008 was 722-1763-004 and -005. Part No. 722-1763-009 was 722-1763-006.	All
198.263	Added "shall begin with" to step (j) and "at the end of glideslope message". to step (6)(b).	All
198.264	In steps (f) and (l), Part No. 722-1763-007 and -008 was 722-1763-004 and -005. Part No. 722-1763-009 was 722-1763-006.	All
198.265	Delete step (b) from E.(1).	All
198.266	Step (3)(b) was Adjust R26 clockwise until frequency counter indicates 154±2 micro-seconds for the slow speed clock display on the scope.	All
198.267	In step (5)(a), the scope display was dis-play on the scope.	All
	Deleted "counter clockwise" from step (5)(d).	All

PAGE NO	DESCRIPTION OF CHANGE	EFFECTIVITY
198.273	Part No. 722-1763-007 and -009 was 722-1763-004 and -006.	Model -073, -079
198.293	Deleted "COMP PWR switch to ON" from step E.(1). In step E.(3), METER SELECT was METER SWITCH.	All
198.294	In step (15), verify INHIBIT switch is OFF was set INHIBIT switch to OFF.	All
198.296	In step (40) TSTR PWR was COMP PWR.	All
198.307	Deleted "COMP PWR switch to ON" from Step E.(1).	All
198.307/.308/ .309/.311	Part No. 722-1783-007 was 722-1783-003, 722-1783-008 was 722-1783-004, 722-1783--009 was 722-1783-005 and 722-1783-010 was 722-1783-006.	All
198.310	Added NOTE after step (31).	All
198.311	Added "(+28 vdc) and (0 vdc)" to step (71).	All
302	In step (8), (A7P1) was (A7P2)	All
302/304/305	Revised item numbers to be compatible with IPL.	All
305	Added NOTE after I.(2)	All
703/711	Revised item number to compatible with IPL.	All
705	Added NOTE after E.(3)	All
711	In step (28), (A7P1) was (A7P2)	All
901/902/903	Revised to clarify equipment required.	All
IPL	Revised to bring up to date.	All

COMPONENT MAINTENANCE MANUAL
PART NO. 965-0376

RECORD OF REVISIONS

ASSIGNED TO (JOB TITLE)	LOCATION

REV. NO.	INSERTION DATE	BY	REV. NO.	INSERTION DATE	BY	REV. NO.	INSERTION DATE	BY	REV. NO.	INSERTION DATE	BY

RETAIN THIS RECORD IN THE FRONT OF MANUAL OR CHAPTER
ON RECEIPT OF REVISIONS, INSERT REVISED PAGES IN THE MANUAL, AND ENTER REVISION NUMBER, DATE INSERTED, AND INITIALS

SERVICE BULLETIN LIST

SERVICE BULLETIN	INCORP.	DESCRIPTION
965-0376-34-1	Dec 1/75	Modification to prevent false baro inhibits (Applicable to Part No. 965-0376-070, serial No. 151 thru 154; 965-0376-071, serial No. 151 thru 157; 965-0376-073, serial Nos. 151 thru 155; and 965-0376-081 serial Nos. 151 thru 166.
965-0376-34-2	Dec 1/75	Modification of power supply, audio, Monitor logic, voice warning and glideslope assemblies. Units identified as Mod 2 after modification. Service bulletin incorporated at factory as follows (Code ident. resistor change and test change.)

Part No.	Serial No.
965-0376-070	246 and on
965-0376-071	421 and on
965-0376-072	212 and on
965-0376-073	242 and on
965-0376-079	209 and on
965-0376-081	221 and on

965-0376-81-34-3	Dec 1/75	Change nominal value of glideslope soft warning. Units identified as Mod 3 after modification. Service bulletin incorporated as follows (Code ident. resistor change, no test change.)

Part No.	Serial No.
965-0376-081	221 and on

965-0376-34-4	Dec 1/75	Modification of chassis wiring. Units identified as follows after modification, Part Nos. 965-0376-070, -071, -072, and -079 as Mod 3; Part Nos 965-0376-073 and 081 as Mod 4 and Part No. 965-0376-087 as Mod 1. Service bulletin incorporated at factory as follows (No code ident. resistor change and no test change.)

Part No.	Serial No.
965-0376-070	394 and on
965-0376-071	561 and on
965-0376-072	322 and on
965-0376-073	266 and on
965-0376-079	286 and on
965-0376-081	329 and on
965-0376-087	500 and on

SERVICE BULLETIN LIST

SERVICE BULLETIN	INCORP	DESCRIPTION
965-0376-34-5	Jul 15/76	Installation of revised identification plate showing FAA TSO-C92A approval. (No code ident. resistor change and no test change.)
965-0376-34-6	Jul 15/76	Modification to prevent rising terrain nuisance warnings before aircraft reaches beginning of runway. Units identified as follows after modification, Part Nos. 965-0376-070, -071, -072 and -079 as Mod 4; Part Nos 965-0376-073 and -081 as Mod 5 and Part No. 965-0376-087 as Mod 2. Service bulletin incorporated at factory as follows (Code ident. resistor change and test change.)

Part No.	Serial No.
965-0376-070	504 and on
965-0376-071	640 and on
965-0376-072	344 and on
965-0376-073	267 and on
965-0376-079	300 and on
965-0376-081	345 and on
965-0376-087	380 and on

965-0376-34-7 — Jul 15/76 — Modification to improve interface with low voltage radio altimeter validity signals. Units identified as follows after modification, Part Nos.965-0376-070, -071, -072 and -079 as Mod 5; Part Nos 965-0376-073 and -087 as Mod 3 and Part No. 965-0376-081 as Mod 6. Service bulletin incorporated at factory as follows (Code ident. resistor change, but no test change.)

Part No.	Serial No.
965-0376-071	640 and on
965-0376-072	344 and on
965-0376-073	266 and on
965-0376-079	300 and on
965-0376-081	345 and on
965-0376-087	380 and on

SERVICE BULLETIN LIST

SERVICE BULLETIN	INCORP	DESCRIPTION
965-0376-34-8	Jul 15/76	Modification to increase margin against aural warning when switching from APU to aircraft power on the ground. Units identified as follows after modification, Part Nos. 965-0376-070, -071, -072, -073 and -079 as Mod 6; Part No. 965-0376-081 as Mod 7 and Part No. 965-0376-087 as Mod 4. Service bulletin incorporated at factory as follows (No code ident. resistor change and no test change.)

Part No.	Serial No.
965-0376-070	513 and on
965-0376-071	639 and on
965-0376-072	267 and on
965-0376-073	267 and on
965-0376-079	300 and on
965-0376-081	345 and on
965-0376-087	380 and on

LIST OF EFFECTIVE PAGES

SUBJECT	PAGE	DATE
Title	--	Nov 30/76
Record of Revisions	--	Dec 1/75
Record of Temporary Revisions	To be added as required	
Service Bulletin	1	Nov 30/76
	2	Nov 30/76
	3	Nov 30/76
List of Effective Pages	1	Nov 30/76
	2	Nov 30/76
	3	Nov 30/76
	4	Nov 30/76
	5	Nov 30/76
	6	Jul 15/76
	7	Nov 30/76
	8	Jul 15/76
Table of Contents	1	Jul 15/76
	2	Jul 15/76
	3	Dec 1/75
	4	Dec 1/75
	5	Dec 1/75
	6	Blank
List of Illustrations	1	Dec 1/75
	2	Dec 1/75
	3	Dec 1/75
	4	Blank
Introduction	1	Dec 1/75
	2	Blank
Description and Operation	1	Dec 1/75
	2	Nov 30/76
	3	Dec 1/75
	4	Dec 1/75
Description and Operation (cont'd)	5	Dec 1/75
	6	Jul 15/76
	7	Dec 1/75
	8	Dec 1/75
	9	Dec 1/75
	10	Dec 1/75
	11	Dec 1/75
	12	Dec 1/75
	13	Dec 1/75
	14	Dec 1/75
	15	Jul 15/76
	16	Jul 15/76
	17	Jul 15/76
	18	Dec 1/75
	19	Jul 15/76
	20	Dec 1/75
	21	Jul 15/76
	22	Dec 1/75
	23	Dec 1/75
	24	Jul 15/76
	25	Jul 15/76
	26	Nov 30/76
	27	Dec 1/75
	28	Dec 1/75
	29	Dec 1/75
	30	Dec 1/75
	31	Dec 1/75
	32	Jul 15/76
	33	Jul 15/76
	34	Dec 1/75
	35	Dec 1/75
	36	Dec 1/75
	37	Dec 1/75
	38	Jul 15/76
	39	Dec 1/75
	40	Dec 1/75
	41	Dec 1/75
	42	Dec 1/75
	43	Dec 1/75
	44	Dec 1/75
	45	Dec 1/75
	46	Dec 1/75
	47	Dec 1/75

SUBJECT	PAGE	DATE
Description and Operation (cont'd)	48	Dec 1/75
	49	Dec 1/75
	50	Dec 1/75
	51	Dec 1/75
	52	Dec 1/75
	53	Dec 1/75
	54	Jul 15/76
	55	Dec 1/75
	56	Dec 1/75
	57	Dec 1/75
	58	Jul 15/76
	59	Dec 1/75
	60	Dec 1/75
	61	Dec 1/75
	62	Dec 1/75
	63	Dec 1/75
	64	Blank
Testing and Troubleshooting	101	Jul 15/76
	102	Jul 15/76
	103	Nov 30/76
	104	Jul 15/76
	105	Dec 1/75
	106	Dec 1/75
	107	Jul 15/76
	108	Dec 1/75
	109	Dec 1/75
	110	Jul 15/76
	111	Dec 1/75
	112	Dec 1/75
	113	Dec 1/75
	114	Dec 1/75
	115	Jul 15/76
	116	Nov 30/76
	117	Nov 30/76
	118	Dec 1/75
	119	Dec 1/75
	120	Dec 1/75
	121	Dec 1/75
	122	Dec 1/75
	123	Dec 1/75
	124	Nov 30/76
	125	Dec 1/75
Testing and Troubleshooting (cont'd)	126	Dec 1/75
	127	Dec 1/75
	128	Jul 15/76
	129	Dec 1/75
	130	Dec 1/75
	131	Dec 1/75
	132	Nov 30/76
	133	Nov 30/76
	134	Dec 1/75
	135	Dec 1/75
	136	Dec 1/75
	137	Dec 1/75
	138	Dec 1/75
	139	Dec 1/75
	140	Nov 30/76
	141	Dec 1/75
	142	Dec 1/75
	143	Nov 30/76
	144	Jul 15/76
	145	Dec 1/75
	146	Dec 1/75
	147	Dec 1/75
	148	Dec 1/75
	149	Dec 1/75
	150	Dec 1/75
	151	Dec 1/75
	152	Dec 1/75
	153	Dec 1/75
	154	Dec 1/75
	155	Dec 1/75
	156	Dec 1/75
	157	Dec 1/75
	158	Nov 30/76
	159	Dec 1/75
	160	Dec 1/75
	161	Dec 1/75
	162	Dec 1/75
	163	Dec 1/75
	164	Dec 1/75
	165	Dec 1/75
	166	Dec 1/75
	167	Dec 1/75
	168	Dec 1/75
	169	Dec 1/75

SUBJECT	PAGE	DATE
Testing and Troubleshooting (cont'd)	170	Dec 1/75
	171	Dec 1/75
	172	Dec 1/75
	173	Dec 1/75
	174	Dec 1/75
	175	Dec 1/75
	176	Dec 1/75
	177	Dec 1/75
	178	Dec 1/75
	179	Dec 1/75
	180	Dec 1/75
	181	Dec 1/75
	182	Dec 1/75
	183	Dec 1/75
	184	Dec 1/75
	185	Dec 1/75
	186	Dec 1/75
	187	Dec 1/75
	188	Dec 1/75
	189	Dec 1/75
	190	Dec 1/75
	191	Dec 1/75
	192	Dec 1/75
	193	Dec 1/75
	194	Dec 1/75
	195	Dec 1/75
	196	Dec 1/75
	197	Dec 1/75
	198	Dec 1/75
	198.1	Dec 1/75
	198.2	Dec 1/75
	198.3	Dec 1/75
	198.4	Dec 1/75
	198.5	Dec 1/75
	198.6	Dec 1/75
	198.7	Dec 1/75
	198.8	Dec 1/75
	198.9	Dec 1/75
	198.10	Dec 1/75
	198.11	Dec 1/75
	198.12	Dec 1/75
	198.13	Dec 1/75
	198.14	Dec 1/75
	198.15	Dec 1/75
	198.16	Dec 1/75
Testing and Troubleshooting (cont'd)	198.17	Dec 1/75
	198.18	Dec 1/75
	198.19	Dec 1/75
	198.20	Dec 1/75
	198.21	Dec 1/75
	198.22	Dec 1/75
	198.23	Dec 1/75
	198.24	Dec 1/75
	198.25	Jul 15/76
	198.26	Jul 15/76
	198.27	Jul 15/76
	198.28	Jul 15/76
	198.29	Jul 15/76
	198.30	Jul 15/76
	198.31	Jul 15/76
	198.32	Jul 15/76
	198.33	Jul 15/76
	198.34	Jul 15/76
	198.35	Jul 15/76
	198.36	Jul 15/76
	198.37	Jul 15/76
	198.38	Jul 15/76
	198.39	Dec 1/75
	198.40	Jul 15/76
	198.41	Nov 30/76
	198.42	Dec 1/75
	198.43	Dec 1/75
	198.44	Jul 15/76
	198.45	Jul 15/76
	198.46	Dec 1/75
	198.47	Jul 15/76
	198.48	Jul 15/76
	198.49	Jul 15/76
	198.50	Dec 1/75
	198.51	Jul 15/76
	198.52	Jul 15/76
	198.53	Jul 15/76
	198.54	Jul 15/76
	198.55	Jul 15/76
	198.56	Jul 15/76
	198.57	Dec 1/75
	198.58	Dec 1/75
	198.59	Dec 1/75
	198.60	Jul 15/76
	198.61	Dec 1/75

SUBJECT	PAGE	DATE
Testing and Troubleshooting (cont'd)	198.62	Dec 1/75
	198.63	Dec 1/75
	198.64	Jul 15/76
	198.65	Jul 15/76
	198.66	Dec 1/75
	198.67	Jul 15/76
	198.68	Jul 15/76
	198.69	Dec 1/75
	198.70	Dec 1/75
	198.71	Dec 1/75
	198.72	Dec 1/75
	198.73	Nov 30/76
	198.74	Nov 30/76
	198.75	Dec 1/75
	198.76	Dec 1/75
	198.77	Dec 1/75
	198.78	Dec 1/75
	198.79	Dec 1/75
	198.80	Dec 1/75
	198.81	Dec 1/75
	198.82	Dec 1/75
	198.83	Dec 1/75
	198.84	Dec 1/75
	198.85	Dec 1/75
	198.86	Dec 1/75
	198.87	Dec 1/75
	198.88	Dec 1/75
	198.89	Dec 1/75
	198.90	Dec 1/75
	198.91	Dec 1/75
	198.92	Dec 1/75
	198.93	Dec 1/75
	198.94	Dec 1/75
	198.95	Dec 1/75
	198.96	Dec 1/75
	198.97	Dec 1/75
	198.98	Dec 1/75
	198.99	Dec 1/75
	198.100	Dec 1/75
	198.101	Dec 1/75
	198.102	Dec 1/75
	198.103	Dec 1/75
	198.104	Dec 1/75
	198.105	Dec 1/75
	198.106	Dec 1/75
Testing and Troubleshooting (cont'd)	198.107	Dec 1/75
	198.108	Dec 1/75
	198.109	Dec 1/75
	198.110	Dec 1/75
	198.111	Dec 1/75
	198.112	Dec 1/75
	198.113	Dec 1/75
	198.114	Dec 1/75
	198.115	Dec 1/75
	198.116	Dec 1/75
	198.117	Dec 1/75
	198.118	Dec 1/75
	198.119	Blank
	198.120	Dec 1/75
	198.121	Dec 1/75
	198.122	Blank
	198.123	Blank
	198.124	Dec 1/75
	198.125	Nov 30/76
	198.126	Blank
	198.127	Blank
	198.128	Dec 1/75
	198.129	Blank
	198.130	Nov 30/76
	198.131	Dec 1/75
	198.132	Blank
	198.133	Blank
	198.134	Nov 30/76
	198.135	Dec 1/75
	198.136	Blank
	198.137	Blank
	198.138	Jul 15/76
	198.139	Blank
	198.140	Jul 15/76
	198.141	Jul 15/76
	198.142	Blank
	198.143	Blank
	198.144	Jul 15/76
	198.145	Jul 15/76
	198.146	Blank
	198.147	Blank
	198.148	Jul 15/76
	198.149	Blank
	198.150	Jul 15/76
	198.151	Jul 15/76

SUBJECT	PAGE	DATE
Testing and Troubleshooting (cont'd)	198.152	Blank
	198.153	Blank
	198.154	Jul 15/76
	198.155	Blank
	198.156	Nov 30/76
	198.157	Jul 15/76
	198.158	Blank
	198.159	Blank
	198.160	Nov 30/76
	198.161	Nov 30/76
	198.162	Blank
	198.163	Nov 30/76
	198.164	Jul 15/76
	198.165	Jul 15/76
	198.166	Blank
	198.167	Blank
	198.168	Jul 15/76
	198.169	Blank
	198.170	Jul 15/76
	198.171	Dec 1/75
	198.172	Jul 15/76
	198.173	Blank
	198.174	Jul 15/76
	198.175	Jul 15/76
	198.176	Blank
	198.177	Blank
	198.178	Dec 1/75
	198.179	Dec 1/75
	198.180	Blank
	198.181	Dec 1/75
	198.182	Blank
	198.183	Blank
	198.184	Jul 15/76
	198.185	Jul 15/76
	198.186	Dec 1/75
	198.187	Dec 1/75
	198.188	Blank
	198.189	Jul 15/76
	198.190	Jul 15/76
	198.191	Jul 15/76
	198.192	Dec 1/75
	198.193	Dec 1/75
	198.194	Jul 15/76
	198.195	Jul 15/76
Testing and Troubleshooting (cont'd)	198.196	Jul 15/76
	198.197	Jul 15/76
	198.198	Jul 15/76
	198.199	Dec 1/75
	198.200	Jul 15/76
	198.201	Jul 15/76
	198.202	Jul 15/76
	198.203	Dec 1/75
	198.204	Dec 1/75
	198.205	Dec 1/75
	198.206	Dec 1/75
	198.207	Dec 1/75
	198.208	Dec 1/75
	198.209	Dec 1/75
	198.210	Dec 1/75
	198.211	Dec 1/75
	198.212	Dec 1/75
	198.213	Dec 1/75
	198.214	Blank
	198.215	Jul 15/76
	198.216	Jul 15/76
	198.217	Nov 30/76
	198.218	Nov 30/76
	198.219	Nov 30/76
	198.220	Jul 15/76
	198.221	Nov 30/76
	198.222	Jul 15/76
	198.223	Jul 15/76
	198.224	Jul 15/76
	198.225	Jul 15/76
	198.226	Dec 1/75
	198.227	Dec 1/75
	198.228	Dec 1/75
	198.229	Dec 1/75
	198.230	Dec 1/75
	198.231	Dec 1/75
	198.232	Jul 15/76
	198.233	Jul 15/76
	198.234	Dec 1/75
	198.235	Dec 1/75
	198.236	Dec 1/75
	198.237	Dec 1/75
	198.238	Blank
	198.239	Jul 15/76

SUBJECT	PAGE	DATE
Testing and Troubleshooting (cont'd)	198.240	Jul 15/76
	198.241	Jul 15/76
	198.242	Jul 15/76
	198.243	Dec 1/75
	198.244	Dec 1/75
	198.245	Jul 15/76
	198.246	Jul 15/76
	198.247	Jul 15/76
	198.248	Dec 1/75
	198.249	Dec 1/75
	198.250	Dec 1/75
	198.251	Dec 1/75
	198.252	Dec 1/75
	198.253	Dec 1/75
	198.254	Dec 1/75
	198.255	Dec 1/75
	198.256	Blank
	198.257	Jul 15/76
	198.258	Jul 15/76
	198.259	Dec 1/75
	198.260	Jul 15/76
	198.261	Jul 15/76
	198.262	Jul 15/76
	198.263	Jul 15/76
	198.264	Jul 15/76
	198.265	Jul 15/76
	198.266	Jul 15/76
	198.267	Jul 15/76
	198.268	Dec 1/75
	198.269	Dec 1/75
	198.270	Dec 1/75
	198.271	Dec 1/75
	198.272	Dec 1/75
	198.273	Jul 15/76
	198.274	Dec 1/75
	198.275	Dec 1/75
	198.276	Jul 15/76
	198.277	Jul 15/76
	198.278	Jul 15/76
	198.279	Dec 1/75
	198.280	Dec 1/75
	198.281	Dec 1/75
	198.282	Dec 1/75
	198.283	Dec 1/75
	198.284	Dec 1/75
Testing and Troubleshooting (cont'd)	198.285	Dec 1/75
	198.286	Dec 1/75
	198.287	Dec 1/75
	198.288	Dec 1/75
	198.289	Dec 1/75
	198.290	Dec 1/75
	198.291	Jul 15/76
	198.292	Jul 15/76
	198.293	Jul 15/76
	198.294	Jul 15/76
	198.295	Jul 15/76
	198.296	Jul 15/76
	198.297	Dec 1/75
	198.298	Dec 1/75
	198.299	Dec 1/75
	198.300	Dec 1/75
	198.301	Dec 1/75
	198.302	Dec 1/75
	198.303	Dec 1/75
	198.304	Blank
	198.305	Nov 30/76
	198.306	Jul 15/76
	198.307	Jul 15/76
	198.308	Jul 15/76
	198.309	Jul 15/76
	198.310	Jul 15/76
	198.311	Jul 15/76
	198.312	Dec 1/75
	198.313	Nov 30/76
	198.314	Dec 1/75
	198.315	Dec 1/75
	198.316	Dec 1/75
	198.317	Dec 1/75
	198.318	Dec 1/75
	198.319	Dec 1/75
	198.320	Dec 1/75
Disassembly	301	Dec 1/75
	302	Jul 15/76
	303	Dec 1/75
	304	Jul 15/76
	305	Nov 30/76
	306	Dec 1/75
Cleaning	401	Dec 1/75

SUBJECT	PAGE	DATE
Cleaning (cont'd)	402	Dec 1/75
	403	Dec 1/75
	404	Dec 1/75
Check	501	Dec 1/75
	502	Blank
Repair	601	Dec 1/75
	602	Dec 1/75
	603	Dec 1/75
	604	Blank
Assembly	701	Dec 1/75
	702	Dec 1/75
	703	Jul 15/76
	704	Dec 1/75
	705	Jul 15/76
	706	Dec 1/75
	707	Dec 1/75
	708	Dec 1/75
	709	Dec 1/75
	710	Dec 1/75
	711	Jul 15/76
	712	Dec 1/75
	713	Dec 1/75
	714	Blank
Fits and Clearances	801	Dec 1/75
	802	Dec 1/75
	803	Dec 1/75
	804	Dec 1/75
Special Tools, Fixtures and Equipment	901	Jul 15/76
	902	Jul 15/76
	903	Jul 15/76
	904	Blank
Illustrated Parts List	1001	Dec 1/75
	1002	Dec 1/75
	1003	Dec 1/75
	1004	Dec 1/75
	1005	Dec 1/75
	1006	Jul 15/76
	1007	Jul 15/76
	1008	Dec 1/75
	1009	Jul 15/76
Illustrated Parts List (cont'd)	1010	Jul 15/76
	1011	Jul 15/76
	1012	Dec 1/75
	1013	Nov 30/76
	1014	Jul 15/76
	1015	Jul 15/76
	1016	Jul 15/76
	1017	Dec 1/75
	1018	Jul 15/76
	1019	Jul 15/76
	1020	Jul 15/76
	1021	Jul 15/76
	1022	Nov 30/76
	1023	Jul 15/76
	1024	Jul 15/76
	1025	Jul 15/76
	1026	Jul 15/76
	1027	Jul 15/76
	1028	Jul 15/76
	1029	Nov 30/76
	1030	Jul 15/76
	1031	Blank
	1032	Dec 1/75
	1033	Blank
	1034	Jul 15/76
	1035	Jul 15/76
	1036	Jul 15/76
	1037	Jul 15/76
	1038	Jul 15/76
	1039	Jul 15/76
	1040	Jul 15/76
	1041	Jul 15/76
	1042	Blank
	1043	Blank
	1044	Jul 15/76
	1045	Blank
	1046	Dec 1/75
	1047	Jul 15/76
	1048	Dec 1/75
	1049	Jul 15/76
	1050	Blank
	1051	Blank
	1052	Jul 15/76
	1053	Blank
	1054	Jul 15/76

SUBJECT	PAGE	DATE
Illustrated Parts List (cont'd)	1055	Blank
	1056	Dec 1/75
	1057	Jul 15/76
	1058	Jul 15/76
	1059	Dec 1/75
	1060	Jul 15/76
	1061	Dec 1/75
	1062	Blank
	1063	Blank
	1064	Jul 15/76
	1065	Blank
	1066	Jul 15/76
	1067	Jul 15/76
	1068	Jul 15/76
	1069	Jul 15/76
	1070	Blank
	1071	Blank
	1072	Jul 15/76
	1073	Jul 15/76
	1074	Jul 15/76
	1075	Blank
	1076	Jul 15/76
	1077	Jul 15/76
	1078	Jul 15/76
	1079	Blank
	1080	Jul 15/76
	1081	Jul 15/76
	1082	Dec 1/75
	1083	Blank
	1084	Dec 1/75
	1085	Blank
	1086	Dec 1/75
	1087	Dec 1/75
	1088	Dec 1/75
	1089	Blank
	1090	Dec 1/75
	1091	Blank
	1092	Jul 15/76
	1093	Jul 15/76
	1094	Jul 15/76
	1095	Jul 15/76
	1096	Jul 15/76
	1097	Jul 15/76
	1098	Blank
Illustrated Parts List (cont'd)	1098.1	Blank
	1098.2	Nov 30/76
	1098.3	Nov 30/76
	1098.4	Nov 30/76
	1098.5	Blank
	1098.6	Jul 15/76
	1098.7	Jul 15/76
	1098.8	Jul 15/76
	1098.9	Jul 15/76
	1098.10	Blank

TABLE OF CONTENTS

SUBJECT	PAGE
INTRODUCTION	1
DESCRIPTION AND OPERATION	1
1. Physical Description	1
2. System Operation	3
A. GPWC Block Diagram	3
B. Input Signals	5
C. Warning Outputs	7
D. Programmable Altitude Demod and Rate Generator	14
E. General Description for each end item number	15
3. Circuit Description	22
A. Power Supply Assembly(A1)	22
B. Comparator and Closure Warning Assembly (A2)	27
C. Audio Assembly (A3)	34
D. Voice Warning Assembly (A4)	39
E. Synchro Demodulator Assembly (A4A2)	45
F. Monitor Logic Assembly (A5)	52
G. Glideslope Assembly (A6)	55
H. Self Test Assembly (A7)	59
I. Heatsink Assembly (A8)	59
J. Code Identifier Assembly (A9)	59
K. External Mode Counter Driver Assembly (A10)	59
L. Self Test	59
TEST AND TROUBLESHOOTING	101
1. General	101
2. Functional, Calibration and Troubleshooting Test Procedure with Tester Part No. 951-0190-XXX	104
A. General	104
B. Test Equipment and Power Requirements	104
C. Initial Test Setup	104
D. Code Resistor Verification Test	106
E. Functional Test Procedure	108
F. Calibration Procedure	143
G. Troubleshooting	160

SUBJECT	PAGE
3. Functional Test, Calibration and Troubleshooting with Tester, Part No. 951-0192-XXX	198.25
A. General	198.25
B. Test Equipment and Power Requirements	198.25
C. Test Setup	198.25
D. Code Resistor Verification Test	198.30
E. Tester Verification	198.32
F. Functional Test	198.32
G. Calibration Procedure	198.72
H. Troubleshooting	198.75
4. Power Supply Assembly (A1) Functional Test, Calibration and Troubleshooting	198.189
A. General	198.189
B. Test Equipment and Power Requirements	198.189
C. Test Setup	198.189
D. Tester Verification	198.191
E. Functional Test	198.192
F. Calibration Procedure	198.202
G. Troubleshooting	198.203
5. Comparator and Closure Warning Assembly (A2) Functional Test and Troubleshooting	198.215
A. General	198.215
B. Test Equipment and Power Requirements	198.215
C. Test Setup	198.215
D. Tester Verification	198.217
E. Initial Conditions	198.217
F. Functional Test	198.217
G. Troubleshooting	198.225
6. Audio Assembly (A3) Functional Test, Calibration and Troubleshooting	198.239
A. General	198.239
B. Test Equipment and Power Requirements	198.239
C. Test Setup	198.239
D. Tester Verification	198.241
E. Functional Test	198.241
F. Calibration Procedure	198.247
G. Troubleshooting	198.248

SUBJECT	PAGE
7. Voice Warning Assembly (A4) Functional Test, Calibration and Troubleshooting	198.257
A. General	198.257
B. Test Equipment and Power Requirements	198.257
C. Test Setup	198.257
D. Functional Test	198.259
E. Calibration Procedure	198.265
F. Troubleshooting	198.267
8. Synchro Demodulator Assembly (A4A2) Functional Test, Calibration and Troubleshooting	198.277
A. General	198.277
B. Test Equipment and Power Requirements	198.277
C. Test Setup	198.277
D. Tester Verification	198.279
E. Functional Test	198.279
F. Calibration Procedure	198.282
G. Troubleshooting	198.283
9. Monitor Logic Assembly (A5) Functional Test and Troubleshooting	198.291
A. General	198.291
B. Test Equipment and Power Requirements	198.291
C. Test Setup	198.291
D. Tester Verification	198.293
E. Functional Test	198.293
F. Troubleshooting	198.296
10. Glideslope Assembly (A6) Functional Test and Troubleshooting	198.305
A. General	198.305
B. Test Equipment and Power Requirements	198.305
C. Test Setup	198.305
D. Tester Verification	198.307
E. Functional Test	198.307
F. Troubleshooting	198.313
DISASSEMBLY	301
1. General	301
2. General Techniques	301
3. Disassembly Procedure	301
A. Ground Proximity Warning Computer	301
B. Power Supply Assembly	304
C. Comparator and Closure Warning Assembly	304

SUBJECT	PAGE
D. Audio Assembly	304
E. Monitor Logic Assembly	305
F. Glideslope Assembly	305
G. Glideslope No. 2 Assembly	305
H. Glideslope No. 1 Assembly	305
I. Voice Warning Assembly	305
J. Voice Warning Assembly with Synchro Demodulator	305
K. Synchro Demodulator Assembly	305
L. Self Test Assembly	306
M. Code Identifier Assembly	306
CLEANING	401
1. General	401
2. Cleaning Materials	401
3. Cleaning Procedures	401
A. Printed Wiring Board Assemblies	402
B. Connectors	402
C. Machined Metal Parts of Assemblies	403
D. Miscellaneous Metal Parts	403
E. Non-Metallic Parts	403
CHECK	501
REPAIR	601
1. General	601
2. Solder	602
3. Wire	602
4. Finished Metallic Surfaces	602
5. Printed Wiring Assemblies	602
ASSEMBLY	701
1. General	701
2. General Techniques	701
3. Assembly Materials	702
4. Assembly Procedures	703
A. Code Identifier Assembly	703
B. Self Test Assembly	703
C. Synchro Demodulator Assembly	703
D. Voice Warning with Synchro Demodulator Assembly	704

SUBJECT	PAGE
E. Voice Warning Assembly	704
F. Glideslope No. 1 Assembly	705
G. Glideslope No. 2 Assembly	705
H. Glideslope Assembly	706
I. Monitor Logic Assembly	706
J. Audio Assembly	707
K. Comparator and Closure Warning Assembly	708
L. Power Supply Assembly	708
M. Ground Proximity Warning Computer	709
5. Storage Instructions	712
FITS AND CLEARANCES	801
SPECIAL TOOLS, FIXTURES, AND EQUIPMENT	901
ILLUSTRATED PARTS LIST	1001
1. Introduction	1001
2. Reference Designation Index	1003
3. Numerical Index	1003
Equipment Designator Index	1005
Numerical Index	1019
Illustrated Parts List	1032

LIST OF ILLUSTRATIONS

FIGURE	TITLE	PAGE
1	Ground Proximity Warning Computer	1
2	Leading Particulars	2
3	GPWC Functional Block Diagram	3
3A	GPWC Basic Assembly Interface	4
4	Radio Altimeter Output	5
5	Mode 1 Warning Envelope	8
6	Mode 2 Warning Envelope	9
7	Mode 3 Takeoff Loss Warning Envelope	10
8	Mode 3 Takeoff Rate Warning Envelope	10
9	Mode 4-A Warning Envelope	11
10	Mode 4-B Warning Envelope	12
11	Mode 5 Warning Envelope	13
12	Warning Logic	23
13	Linearizer Signals	28
14	Trip Equation Output	30
15	Baro Rate Threshold Output	31
16	Timing Diagram	36
17	Voice Warning Block Diagram	40
18	Timing Diagram	41
19	Synchro Demod Block Diagram	46
20	Timing Diagram	47
21	Tangent Function	48
22	Syncro Demod Waveforms	49
101	Test Setup (951-0190 series tester)	105
102	Model/Mod/Resistance	107
103	Calibration Resistor Location (A4, A4A2, A4A2)	149
104	Calibration Resistor Location (A3)	153
105	Calibration Resistor Location (A1)	155
106	Calibration Resistor Location (A2A1)	158
107	Mode 4 Calibration Curves	159
108	Troubleshooting Procedures (951-0190 series tester)	161
109	Test Setup (951-0192 series tester)	198.29
110	Model/Mod/Resistance	198.31
111	Troubleshooting Procedures (951-0192 series tester)	198.76
112	Ground Proximity Warning Computer Schematic/Wiring Diagram	198.118
113	Power Supply (A1) Schematic Diagram	198.128

FIGURE	TITLE	PAGE
114	Comparator and Closure Warning (A2) Schematic Diagram	198.138
115	Audio (A3) Schematic Diagram	198.148
116	Voice Warning (A4) Schematic Diagram	198.154
117	Synchro Demodulator (A4A2) Schematic Diagram	198.164
118	Monitor Logic (A5) Schematic Diagram	198.168
119	Glideslope (A6) Schematic Diagram	198.172
120	Self Test (A7) Schematic Diagram	198.178
121	Code Identifier (A9) Schematic Diagram	198.184
122	External Counter Driver (A10) Schematic Diagram	198.186
123	Test Setup (Power Supply)	198.190
124	Troubleshooting Porcedures (Power Supply)	198.204
125	Test Setup (Comparator and Closure Warning)	198.216
126	Troubleshooting Porcedures (Comparator and Closure Warning)	198.226
127	Test Setup (Audio Assembly)	198.240
128	Troubleshooting Procedures (Audio Assembly)	198.249
129	Test Setup (Voice Warning Assembly)	198.258
130	Troubleshooting Procedures (Voice Warning Assembly)	198.268
131	Test Setup (Synchro Demodulator Assembly)	198.278
132	Troubleshooting Procedures (Sycnhro Demodulator Assembly)	198.284
133	Test Setup (Monitor Logic Assembly)	198.292
134	Troubleshooting Porcedures (Monitor Logic Assembly)	198.297
135	Test Setup (Glideslope Assembly	198.306
136	Troubleshooting Procedures (Glideslope Assembly)	198.314
401	Cleaning Materials	401
501	Repair Materials	601
701	Assembly Materials	712
801	Fits and Clearances	801
901	Special Tools, Fixtures and Equipment	901

FIGURE	TITLE	PAGE
IPL 1	Ground Proximity Warning Computer	1032
IPL 2	Power Supply Assembly (A1)	1044
IPL 3	Comparator and Closure Warning Assembly (A2)	1052
IPL 4	Audio Assembly (A3)	1064
IPL 5	Monitor Logic Assembly (A5)	1072
IPL 6	Glideslope Assembly (A6)	1076
IPL 7	Glideslope No. 2 Assembly (A6A1)	1080
IPL 8	Glideslope No. 1 Assembly (A6A2)	1084
IPL 9	Voice Warning Assembly (A4)	1090
IPL 10	Voice Warning with Synchro Demodulator Assembly (A4)	1096
IPL 11	Synchro Demodulator Assembly (A4A2)	1098.2
IPL 12	Self Test Assembly (A7)	1098.6
IPL 13	Code Identifier Assembly (A9)	1098.8

COMPONENT MAINTENANCE MANUAL
PART NO. 965-0376

INTRODUCTION

This manual has been prepared by Sundstrand Data Control in accordance with ATA Specification No. 100.

This manual contains circuit theory, electrical schematic diagrams and shop verified procedures that will enable a mechanic, who is unfamiliar with the equipment, to test, troubleshoot, repair and restore it to serviceable condition. An illustrated parts list is included which illustrates the equipment covered by this manual. A equipment designator index and numerical index is included to assist in locating parts when the equipment designator or part number is known.

DESCRIPTION AND OPERATION

1. Physical Description

A. The Ground Proximity Warning Computer (GPWC) is manufactured by Sundstrand Data Control. Refer to figure 1 for an overall view of the computer. Section 2.E provides a list of the computers covered in this manual and their basic differences.

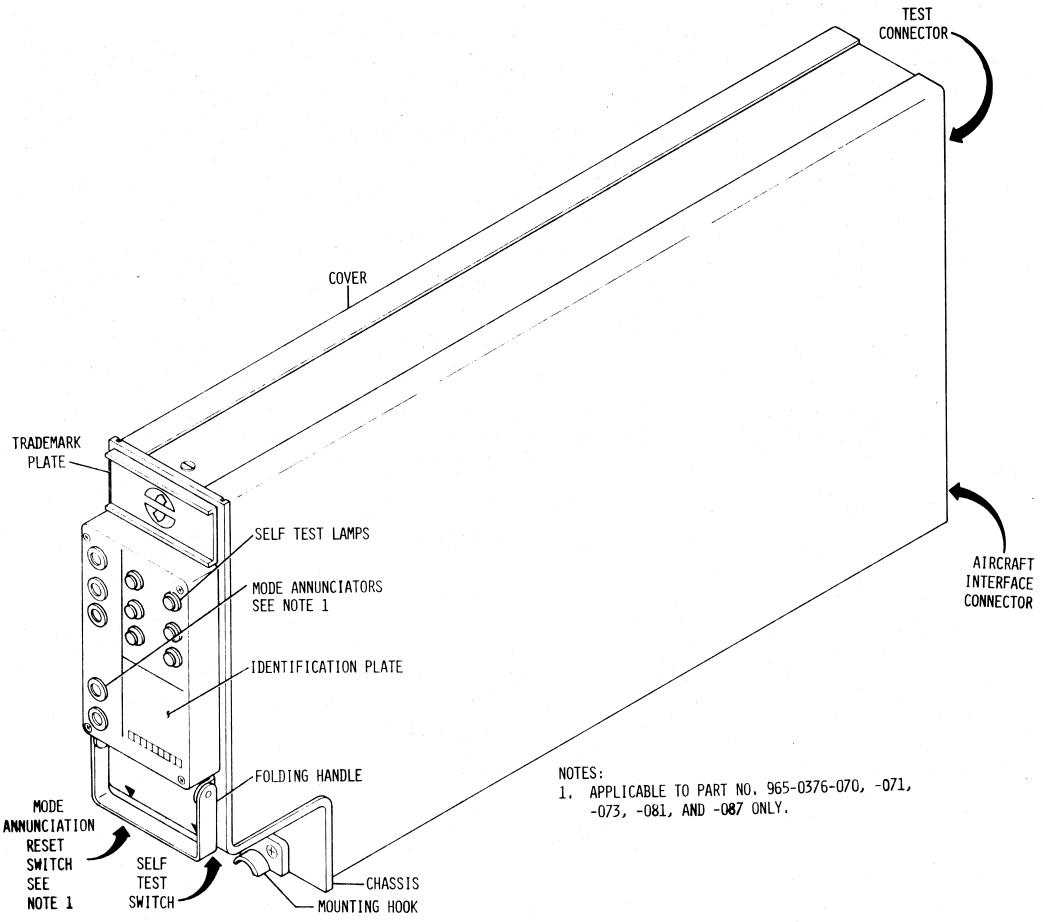

Ground Proximity Warning Computer
Figure 1

B. The GPWC consists of ten assemblies: power supply (A1), comparator and closure warning (A2), audio (A3), voice warning (A4), monitor logic (A5), glideslope (A6), self test (A7), heatsink (A8), code identifier (A9) and external counter driver (A10). The synchro demod assembly (A4A2) is an option.

The A3, A4, A5, and A6 assemblies are mounted in the chassis with connectors to the wiring harness. The A1 and A2 assemblies are hinge-mounted so that with the top screws removed, they may be positioned to allow access to their circuitry and components. Electrical connections to the A1 and A2 assemblies are made through connectors. The A7 assembly is mounted to the front of the chassis with electrical connections made by a connector plugging into the A5 assembly.

The A8 assembly, mounted in the rear of the chassis, consists of two power supply series pass transistors with electrical connections made to A1 through a connector and hard-wiring to the wiring harness. The A9 assembly is mounted to the A8 assembly and is hard-wired to the chassis wiring harness. The A10 assembly is mounted in the forward center section of the chassis. It is plugged in to the A7 assembly and also hard-wired to ATE connector (J2). Two power regulators are mounted in the center section of the chassis with electrical connections made to A4 through a connector and hard-wiring to the chassis wiring. A power transformer, radio interference capacitor, elapsed time meter and lamp switching relays are mounted in the rear of the chassis and are hard-wired to the chassis wiring. A test connector, which allows monitoring of internal points for test and fault isolation is mounted in the rear of the chassis above the aricraft interface connector .

C. GPWC physical and electrical characteristics are listed in figure 2.

Physical Characteristics:	
Overall length:	15.12 inches maximum
Overall width:	2.40 inches maximum
Overall height:	7.84 inches maximum
Weight:	8.0 pounds maximum
Finish:	Semigloss blue wrinkle enamel
Electrical Characteristics:	
Input Power:	115 vac, 400 Hz, single phase, Quiescent condition = 18 watts Warning condition = 22 watts
Mating Aircraft interface connector:	To mate with Cannon Part No. DPX2MA-40P40P34B-0115 or Amp Part No. RM2R40P40P-0115.
Mating test connector:	To mate with Cannon Part No. DPXBMA106-34P-0101 or Amp Part No. RM1R106P-0101

Leading Particulars
Figure 2

2. System Operation

A. GPWC Block Diagram

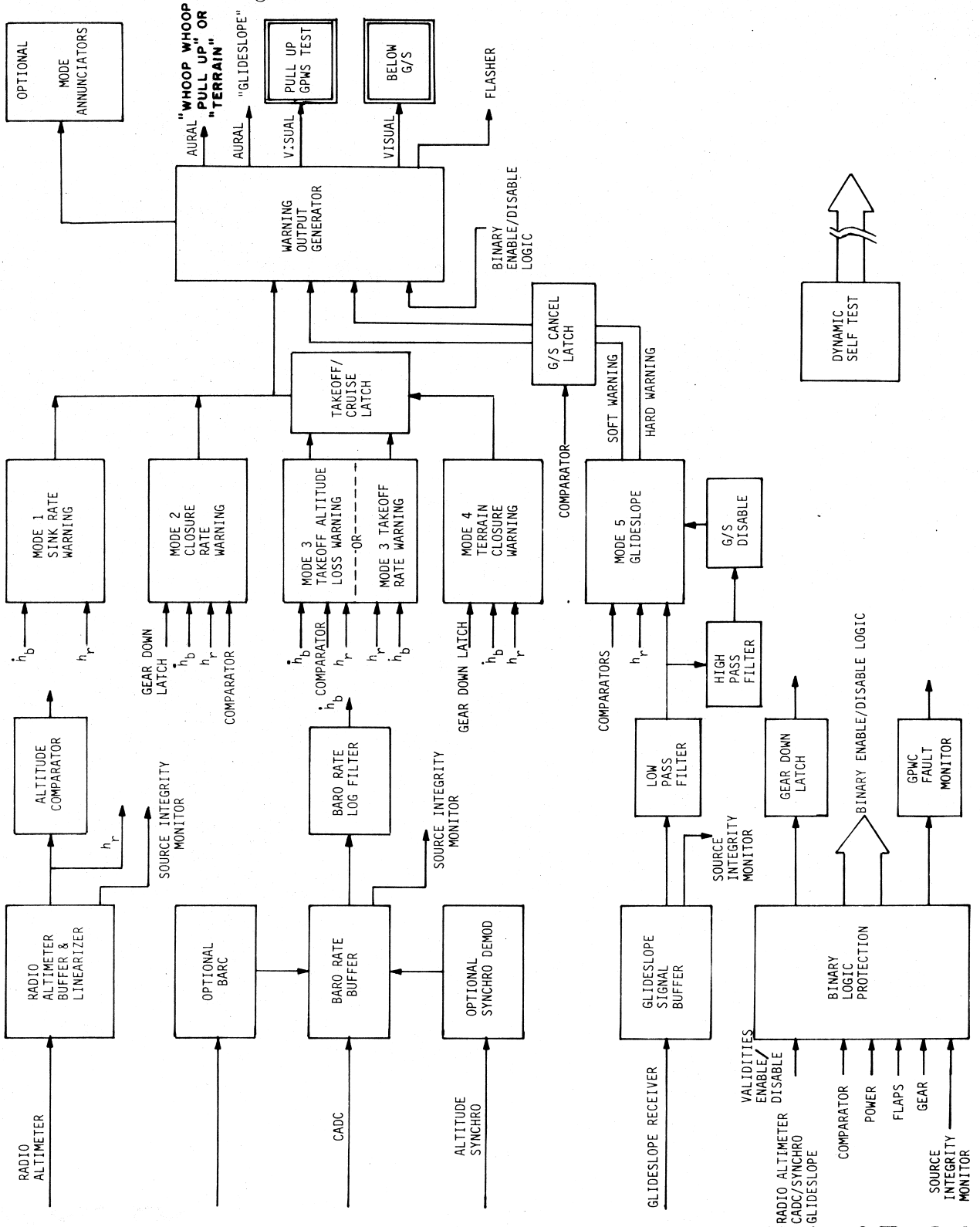

GPWC Functional Block Diagram
Figure 3

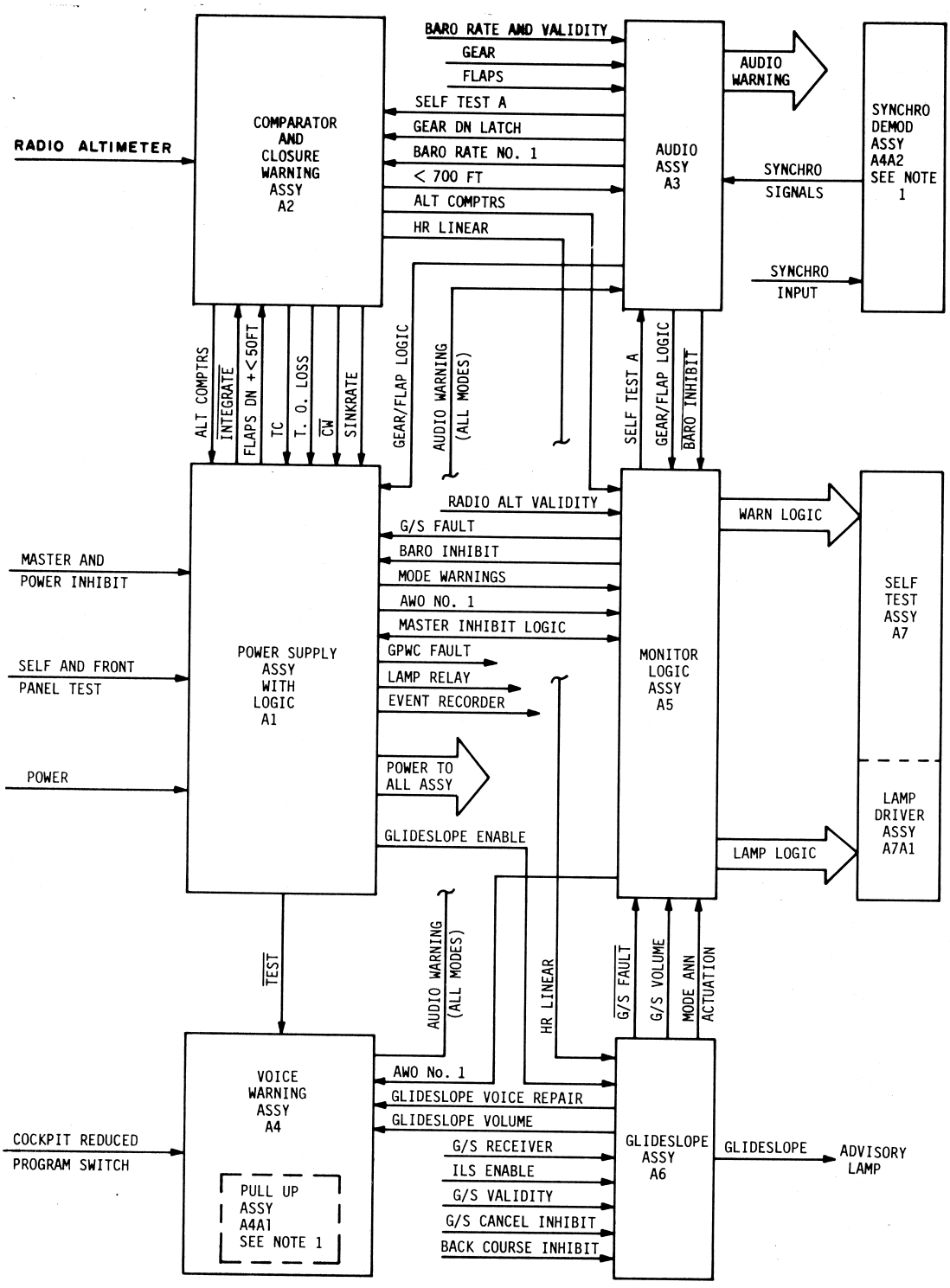

NOTE 1: GPWC will contain either the A4A1 or A4A2 assembly, depending on the options selected by the user.

GPWC Basic Assembly Interface
Figure 3A

B. Input Signals

(1) The GPWC receives input signals from the radio altimeter, central air data computer (CADC), and glideslope receiver. The radio altimeter provides a dc voltage which is a function of aircraft terrain clearance or height above the ground.

Figure 4 shows the radio altimeter output as a function of the terrain clearance. The terrain clearance is independent of actual altitude above sea level but depends only on the clearance above ground level. The maximum useful range above ground level is approximately 2500 feet. As shown, the radio altimeter output is linear below 480 feet which corresponds to + 10.00 vdc, and zero feet which corresponds to + 0.4 vdc.

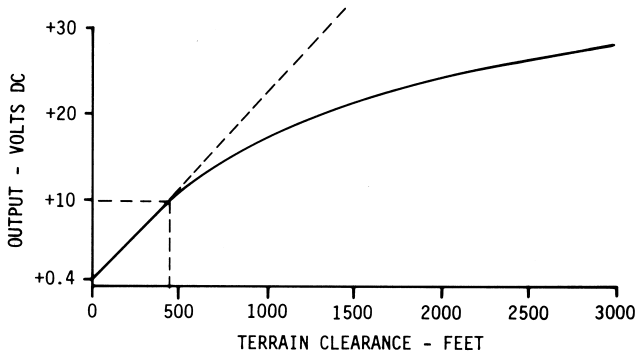

Radio Altimeter Output
Figure 4

(2) The GPWC will accommodate three different types of CADC barometeric rate signals.

(a) A dc signal that is linear at 500 mv/1000 fpm ascent or descent. During ascent the signal is positive and during descent negative. The signal is found on DC-10 aircraft. This signal may also be generated by a Sundstrand Barometric Altitude Rate Computer (BARC) where a CADC barometric rate signal is not available.

(b) An ac signal that is linear at 581 mv/1000 fpm. During ascent the signal is in phase with respect to the ac reference and during descent the signal is out of phase with respect to the ac reference. This signal is found

on some early model DC-8-50 aircraft.

(c) The most common barometric rate signal is ac with a scale of 250 mv/1000 fpm. Phasing is identical with the ac signal above.

(3) For systems not having CADCs, the synchro demod (option for the GPWC) provides a three wire input compatible with the output of the fine altitude synchro. (Ref. para. 2.D.).

(4) Raw glideslope deviation is received from the glideslope receiver or receivers thru existing selector switches. Two input levels are provided.

(a) A Low level input with a sensitivity of 75 mv per dot deviation. (75 ua with a 1K ohm load.)

(b) A High level input with a sensitivity of 1 volt per dot deviation.

(5) The GPWC also will accept the following binary signals. Airplane logic levels are protected from faults within the GPWS by diodes in series with each input.

(a) Baro rate validity or Synchro Demod: + 28 vdc indicates either the barometric rate signal from the CADC or the Synchro rate signal is valid.

(b) Radio altimeter validity: + 28 vdc indicates the radio altimeter signal is valid.

(c) ILS mode: Either a + 28 vdc or a grounded input indicates an ILS frequency has been selected.

(d) Back course: Either a + 28 vdc or a grounded input indicates a back course approach has been selected.

(e) Flap position: Either + 28 vdc or a grounded input indicates the flaps are not in the landing range.

(f) Landing gear position: Either + 28 vdc or a grounded input indicates the landing gear is down or selected down.

(g) Self test command: Switch closure to ground initiates the self test sequence.

(h) Optional output inhibit: Either a + 28 vdc or a grounded input inhibits all warning outputs.

(i) Glideslope: A grounded input will disarm a GLIDESLOPE warning.

(j) Glideslope: A + 28 vdc signal indicates the glideslope signal is valid.

(k) A + 250 mvdc signal indicates the glideslope signal is valid.

C. Warning Outputs

(1) The GPWC provides both visual and aural warning outputs during any of the following conditions. The warning for Modes 1 through 4 is "Whoop Whoop Pull Up" aural warning or "Whoop Whoop Terrain" and the illumination of the PULL UP light in the cockpit. The Mode 5 warning outputs are an aural "GLIDESLOPE" warning and the illumination of the BELOW G/S light in the cockpit.

(a) Mode 1 Excessive sink rate

1. A Mode 1 warning is given if the barometric rate of descent exceeds certain threshold values, shown in Fig. 5 (a). For radio altitudes from 2450 feet down to 1180 feet the boundary of the warning envelope provides a minimum warning time of 30 seconds prior to predicted terrain impact. Below 1180 feet of radio height, less warning time is provided to prevent nuisance alarms during normal terminal operations. Mode 1 is independent of aircraft configuration and is functional when altitude exceeds 50 feet. All warnings are inhibited from beginning below 50 feet of radio height to reduce nuisance alarms caused by ground-effect induced static pressure fluctuations.

2. An alternate Mode 1 warning envelope similar to the above, is shown in Fig. 5 (b). The altered warning boundaries make allowance for certain airplanes whose normal operating characteristics exceed the boundaries of the standard warning envelope.

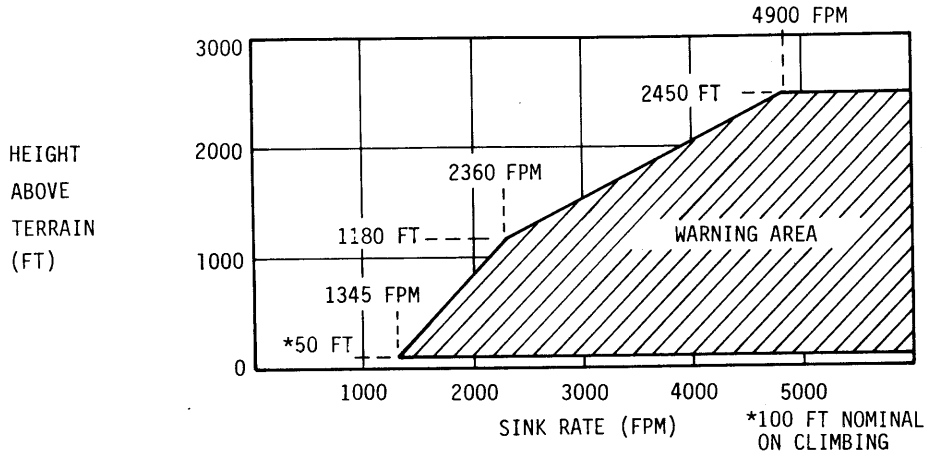

(a)

Mode 1 Warning Envelope

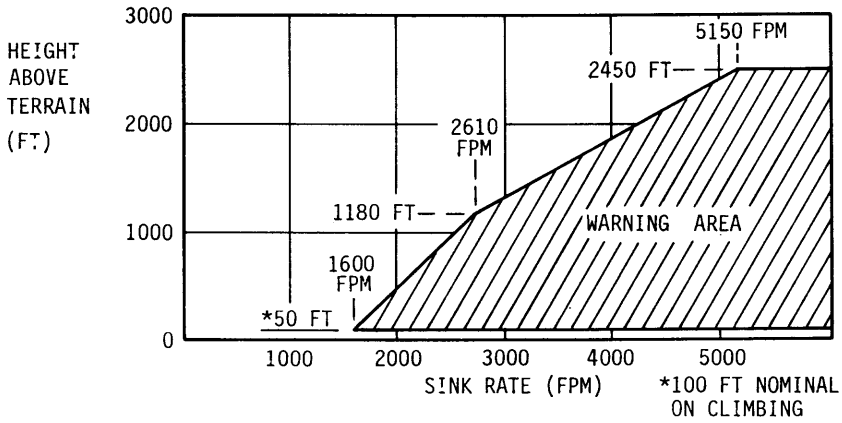

(b)

Alternate Mode 1 Warning Envelope

Figure 5

(b) A Mode 2 warning is given if the GPWC detects a terrain closure rate which exceeds certain threshold values, shown in Fig. 6. The warning profile is altered when the aircraft flaps are extended to the normal landing position, to provide adequate protection during cruise operations while avoiding false warnings during landing approaches.

The Terrain Closure Rate signal is computed in a complementary filter from radio altitude and barometric rate signals. The time constants and signal limiting parameters of the complementary filter have been optimized to give warning of impending terrain contact while eliminating nuisance warnings during normal operations close to terrain (e.g. landing approaches). The GPWC cannot provide a warning if an airplane is flying directly towards a vertical cliff with no preamble. Mode 2 warnings are inhibited from beginning below 50 feet of radio altitude.

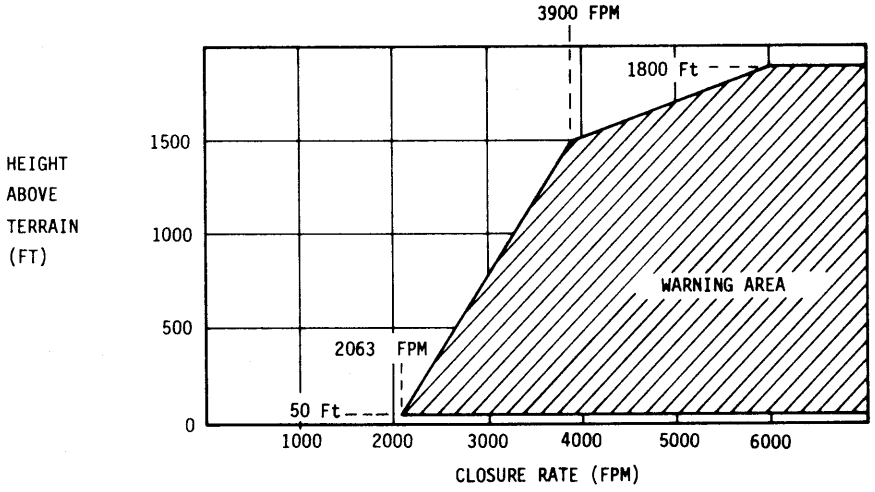

Mode 2 Warning Envelope
Figure 6

(c) Mode 3 Descent after Takeoff

As a factory-installed customer option, the GPWC provides a Mode 3 warning according to either the takeoff altitude loss envelope or the takeoff rate warning envelope.

With the takeoff altitude loss envelope, warning is given if the airplane loses barometric altitude in excess of that permitted by the warning boundary. The altitude loss required to trigger a Mode 3 warning varies with the height of the airplane above the ground at the time the inadvertant descent occurs. At a climbout altitude of 100 feet, a loss of 15 feet

altitude will trigger a Mode 3 warning. At 700 feet, an altitude loss of 70 feet or more is necessary to activate a warning. (Ref. Fig. 7)

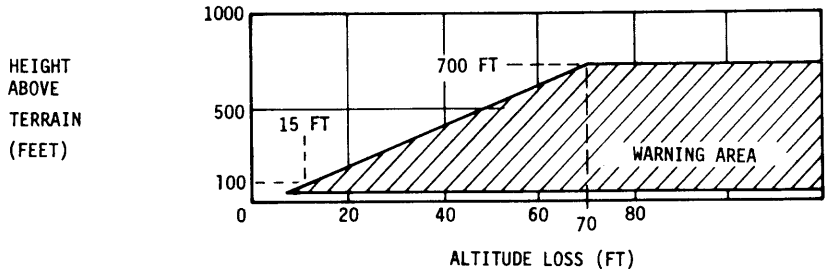

Mode 3 Takeoff Loss Warning Envelope
Figure 7

With the takeoff rate envelope, a warning is issued if, immediately after takeoff and before 700 feet of radio altitude has been attained, the aircraft experiences a barometric sink rate which exceeds a predetermined threshold. The threshold varies from 100 fpm at an altitude of 100 feet, to a value of 500 fpm at an altitude of 700 feet. The envelope is truncated at 100 fpm descent rate to avoid nuisance warnings from static pressure fluctuations in ground effect. (Ref. Fig. 8).

A magnetic latch provides control logic between Modes 3 and 4. During the takeoff phase, the latch is in its set position arming takeoff (Mode 3) warning and disarming the Terrain clearance (Mode 4, see below) warning. Upon attaining 700 ft altitude, the latch trips disarming the takeoff warning mode and arming the terrain clearance warning. The latch will retain its operational state in the event of momentary power loss, eliminating nuisance warnings.

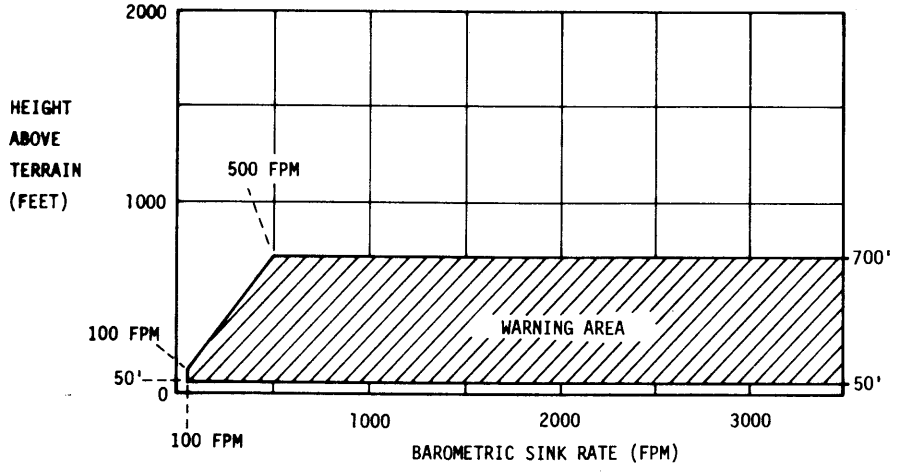

Mode 3 Takeoff Rate Warning Envelope
Figure 8

(d) The GPWC provides a Mode 4 warning in three different conditions.

1. 1st condition: A Mode 4 warning occurs when the aircraft penetrates below 500 feet with landing gear not down. (Fig. 9).

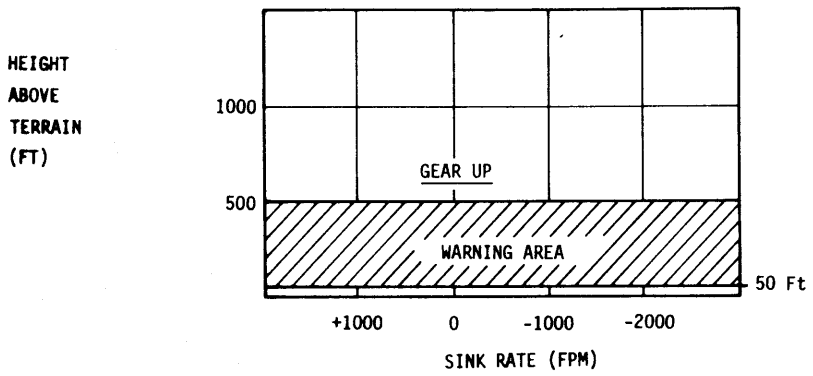

Mode 4-A Warning Envelope
Figure 9

2. 2nd condition: A Mode 4 warning occurs when the aircraft has gear down but flaps not full down and is operating between 200 feet and 500 feet in altitude but has a sink rate exceeding certain values. (See Fig.10 (a)).

3. 3rd condition: Mode 4 warning occurs if the aircraft penetrates below 200 feet altitude, with gear down but flaps not selected to the landing position. If a pilot chooses to land with less than normal landing flaps he can disable this part of the warning envelope by activating a flap override switch installed in the cockpit. This switch affects only the flap warning; all other modes remain active.

4. An alternate Mode 4-B warning envelope, similar to the above is shown in Fig. 10 (b). The altered warning boundaries make allowance for certain airplanes whose operating characteristics exceed the boundaries of the standard warning envelope.

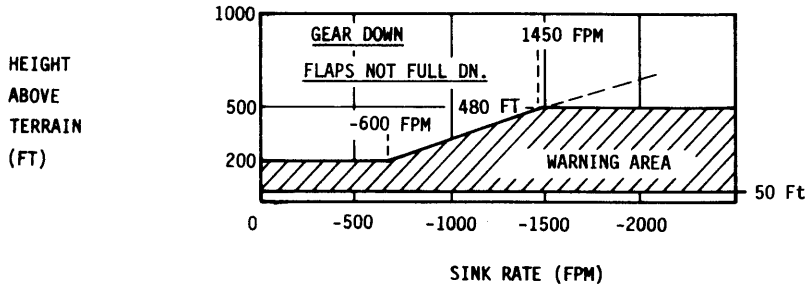

(a)

Mode 4-B Warning Envelope

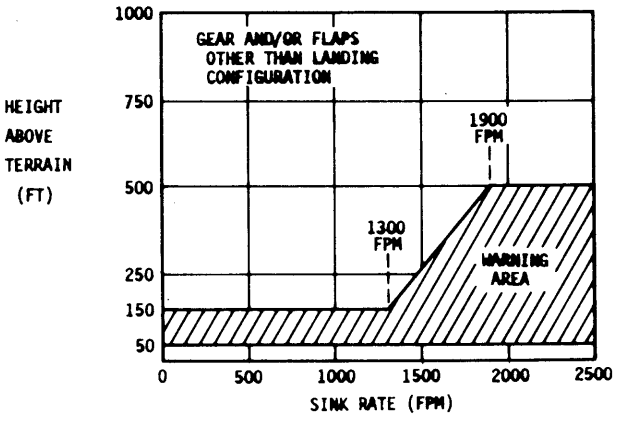

(b)

Alternate Mode 4-B Warning Envelope

Figure 10

(e) Mode 5. Inadvertent descent below Glideslope

This mode is automatically armed when an ILS frequency is selected by the pilot. The warning envelope consists of two active regions, as shown in Figure 11. If the glideslope advisory region is penetrated, a "soft" warning in the form of an amber light labeled BELOW G/S is given, together with a voice advisory which repeats the word "Glideslope". The loudness of the voice advisory is 6 dB below that of the "Pull Up' voice, and the repetition rate of the voice is increased as the deviation below the glideslope increases.

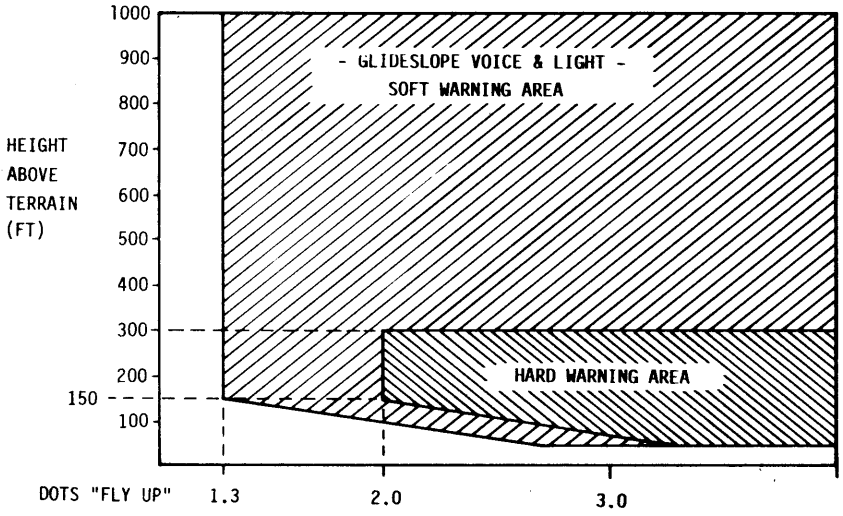

Mode 5 Warning Envelope
Figure 11

A "hard" aural command warning, with a volume level equal to the "Pull Up" level, and illumination of the BELOW G/S light, occurs if the deviation of the aircraft below the glideslope exceeds two dots when the airplane is between 300 and 150 feet of radio height. Below 150 feet of radio height, the amount of glideslope deviation necessary to produce a warning is increased to eliminate nuisance warnings caused by large deviation signals when the aircraft is close to the glideslope transmitter.

To allow the pilot to purposely descend below the glideslope without triggering a warning, the glideslope warning mode can be inhibited by pressing the cockpit BELOW G/S light

when the aircraft is below 1000 feet and a "hard" warning is not in progress. Such a deliberate deviation may be desirable, for example, to allow use of the full length of a runway when weather conditions cause poor braking action.

Mode 5 cannot be inhibited if the aircraft has penetrated the "hard" warning area and the visual and audible warnings are in progress. Ascent to a radio height of above 1000 feet will enable Mode 5 if it has been cancelled. All other modes continue to function independently of Mode 5. A Pull Up warning has priority over a Glideslope warning.

A magnetic latch associated with the glideslope logic assures that the operational situation of the aircraft will be remembered in the event of a power failure during an ILS approach, thus eliminating nuisance warnings.

To prevent nuisance warnings in areas of glideslope beam noise or perturbations, a bandpass filter is included. Irregular signals are passed, disabling the warning circuitry. Thus, the G/S warning mode is enabled when an ILS frequency is selected, the gear is down, and the aircraft is between 50 and 1000 ft. It is disabled when any of the above conditions do not exist or when the G/S beam is noisy or otherwise irregular.

D. Programmable Altitude Demod and Rate Generator

(1) The Ground Proximity Warning System (GPWS) requires a barometric sink rate input. This input is usually supplied by a Central Air Data Computer (CADC) or a Barometric Altitude Rate Computer (BARC). Some jet aircraft do not have CADCs. The barometric altitude rate source, in these aircraft, is provided by a simple air data system the outputs of which are dedicated to the autopilot system and cannot be utilized by other systems. These early systems usually have at least one altitude output, in the form of a synchro signal, that can be utilized by some other avionic systems. The synchro output is a "fine altitude" output with a scale factor of 5000 feet or 18,000 feet of altitude per revolution of synchro shaft angle.

The altitude synchro to altitude rate converter described in section 3.E., converts the repetitive fine synchro output into a continuous altitude rate output.

E. General Description for each end item number

The Sundstrand Ground Proximity Warning Computer is available in a number of configurations. A description of the differences between units, by end item number, is presented.

(1) GPWC Part No. 965-0376-070

A1 Power Supply Assembly does not include two diode inputs (GROUND TEST and + 24 vdc) to the Master Inhibit Logic line which are included on certain Power Supply Assemblies

A2 Comparator Assembly incorporates circuitry such that a Mode 3 (descent after takeoff) warning is given according to a takeoff altitude loss warning envelope (Ref. Fig. 7).

A3 Audio Assembly does not contain an event counter.

A4 Voice Warning Assembly board containing two 16K and two 8K ROMs, which hold the binary words used to generate the audio outputs of the assembly. One 16K ROM contains the "WHOOP WHOOP" program, and the second 16K ROM contains the "GLIDESLOPE" program. The two 8K ROMs together contain the "PULLUP" program: One 8K ROM contains "PUL" and the other 8K contains "LUP" (PULLUP). The two 8K ROMs together are designated the A4A1 assembly. For replacement and future manufacture the A4A1 assembly has been superseded by a 16K ROM mounted on the A4 assembly.

A4A2 Synchro Demod not included in this end item.

A5 Monitor Logic Assembly containing the logic for the system status lamp drivers and warning mode annunciator ball drivers.

A6 Glideslope Assembly input bias resistors (R6, R7, R11 and R13) deleted, eliminating source monitoring.

A7 Self Test Assembly for units with mode annunciators. It contains both system status lamps and mode warning annunciators.

A8 Heatsink Assembly, no configuration changes for any of the end items listed.

A9 Code Identifier, refer to IPL Fig. 13 for the configuration of the code identifier for this end item number.

A10 External Mode Counter Driver Assembly consisting of a resistor network which provides interface between GPWC and the optional external counter, (Part No. 964-0201-001 or 002).

Special Features, jumper from J1A-38 to K2-1 and jumper from J1A-7 to J1B-37.

(2) GPWC Part No. 965-0376-071

A1 Power Supply Assembly does not include two diode inputs (GROUND TEST and + 24 vdc) to the Master Inhibit Logic line which are included on certain Power Supply Assemblies.

A2 Comparator Assembly Incorporates circuitry such that a Mode 3 (descent after takeoff) warning is given according to a takeoff altitude loss warning envelope (Ref. Fig. 7).

A3 Audio Assembly does not contain an event counter.

A4 Voice Warning Assembly board containing two 16K and two 8K ROMs which hold the binary words used to generate the audio outputs of the assembly. One 16K ROM contains the "WHOOP WHOOP" program, and the second 16K ROM contains the "Glideslope" program. The two 8K ROMs together contain the "PULLUP" program: One 8K ROM contains "PUL" and the other 8K contains "LUP" (PULLUP). The two 8K ROMs together are designated the A4A1 assembly. For replacement and future manufacture the A4A1 assembly has been superseded by a 16K ROM mounted on the A4 assembly.

A4A2 Synchro Demod not included in this end item.

A5 Monitor Logic Assembly containing the logic for the system status lamp drivers and warning mode annunciatio ball drivers.

A6 Glideslope Assembly includes input bias for source monitoring.

A7 Self Test Assembly for units with mode annunciators. It contains both system status lamps and mode warning annunciators.

A8 Heatsink Assembly, no configuration changes for any of the end items listed.

A9 Code Identifier, refer to IPL Fig. 13 for the configuration of this code identifier.

A10 External Counter Driver Assembly consisting of a resistor network which provides interface between GPWC and the optional external counter, Part No. 964-0201-001 or 002.

(3) GPWC Part No. 965-0376-072

A1 Power Supply Assembly does not include two diode inputs (GROUND TEST and + 24 vdc) to the Master Inhibit Logic line which are included on certain Power Supply Assemblies.

A2 Comparator Assembly incorporates circuitry such that a Mode 3 (descent after takeoff) warning is given according to a takeoff altitude loss warning envelope. (Ref. Fig. 7)

A3 Audio Assembly does not contain an event counter.

A4 Voice Warning Assembly board containing two 16K and two 8K ROMs, which hold the binary words used to generate the audio outputs of the assembly. One 16K ROM contains the "WHOOP WHOOP" program, and the second 16K ROM contains the "Glideslope" program: The two 8K ROMs together contain the "PULLUP" program: One 8K ROM contains "PUL" and the other 8 contains "LUP" (PULLUP"). The two 8K ROMs together are designated the A4A1 assembly. For replacement and future manufacture the A4A1 assembly has been superseded by a 16K ROM mounted on the A4 assembly.

A4A2 Synchro Demod not included in this end item.

A5 Monitor Ligic Assembly containing the logic for the system status lamp drivers.

A6 Glideslope Assembly includes input bias for source monitoring.

A7 Self Test Assembly for units without mode annunciators. It contains system status lamps only.

A8 Heatsink Assembly, no configuration changes for any of the end items listed.

A9 Code Identifier, refer to IPL Fig. 13 for the configuration of this code identifier.

A10 External Mode Counter Driver Assembly consisting of a Resistor network which provides interface between GPWC and the optional external counter, Part No. 964-0201-001 or -002. This external counter driver configuration is used when the warning mode annunciator option is included in the GPWC.

(4) GPWC Part No. 965-0376-073

A1 Power Supply Assembly does not include two diode inputs (GROUND TEST and + 24 vdc) to the Master Inhibit Logic line which are included on certain Power Supply Assemblies.

A2 Comparator Assembly incorporates circuitry such that a Mode 3 (descent after takeoff) warning is given according to a takeoff altitude loss warning envelope. (Ref. Fig. 7).

A3 Audio Assembly does not contain an event counter.

A4 Voice Warning Assembly board containing three 16K ROMs which hold the binary words used to generate the audio outputs of the assembly. One ROM contains "WHOOP WHOOP", a second ROM contains "PULL UP" and the third contains "GLIDESLOPE".

A4A2 Synchro Demod included in this end item.

A5 Monitor Logic Assembly containing the logic for the system status lamp drivers and the warning mode annunciator ball drivers.

A6 Glideslope Assembly includes input bias for source monitoring.

A7 Self Test Assembly for units with mode annunciators. It contains both system status lamps and mode warning annunciators.

A8 Heatsink Assembly,no configuration changes for any of the end items listed.

A9 Code Identifier, refer to IPL Fig. 13 for the configuration of this code identifier.

A10 External Mode Counter Driver Assembly consisting of a Resistor network which provides interface between GPWC and the optional external counter, Part No. 964-0201-001 or -002. This external counter driver is used when the warning mode annunciator option is included in the GPWC.

Special features, jumper from J1A-12 to J1B-27.

(5) GPWC Part No. 954-0376-087

A1 Power Supply Assembly containing two diode inputs (GROUND TEST and + 24 vdc) to the Master Inhibit Logic line.

A2 Comparator Assembly incorporates circuitry such that a Mode 3 (descent after takeoff) warning is given according to a takeoff altitude loss warning envelope. (Ref. Fig. 7).

A3 Audio Assembly contains an event counter.

A4 Voice Warning Assembly board containing two 16K and two 8K ROMs which hold the binary words used to generate the audio outputs of the assembly. One 16K ROM contains the "WHOOP WHOOP" program, and the second 16K ROM contains the "GLIDESLOPE" program. The two 8K ROMs together contain the "PULLUP" program: One 8K ROM contains "PUL" and the other 8K contains "LUP" (PULL-UP). The two 8K ROMs together are designated the A4A1 assembly. For replacement and future manufacture A4A1 assembly has been superseded by a 16K ROM mounted on the A4 assembly.

A4A2 Synchro Demod not included in this end item.

A5 Monitor Logic Assembly containing the logic for the system status lamp drivers and the warning mode annunciator ball drivers.

A6 Glideslope Assembly - input bias resistors (R6, R7, R11 and R13) deleted, eliminating source monitoring. No connection between U4C-12 and U4B-11 allows G/S cancel even while in hard warning area.

A7 Self Test Assembly for units with mode annunciators. It contains both system status lamps and mode warning annunciators.

A8 Heatsink Assembly, no configuration changes for any of the end items listed.

A9 Code Identifier, refer to IPL Fig. 13 for the configuration of this code identifier.

A10 External Counter Driver Assembly consisting of a Resistor network which provides interface between GPWC and the optional external counter, Part No. 964-0201-001 or -002. This external counter driver is used when the warning mode annunciator option is included in the GPWC.

Special Features: jumper from J1B-22 to J1B-34, jumper from J1A-26 to J1A-27, jumpelr from J1A-7 to J1B-27, jumper from J3-W to J7-14.

(6) GPWC Part No. 965-0376-079

A1 Power Supply Assembly does not include two diode inputs (GROUND TEST and + 24 vdc) to the Master Inhibit Logic line which are included on certain Power Supply Assemblies.

A2 Comparator Assembly incorporates circuitry such that a Mode 3 (descent after takeoff) warning is given according to a takeoff altitude loss warning envelope. (Ref. Fig. 7).

A3 Audio Assembly does not contain an event counter.

A4 Voice Warning Assembly board containing three 16K ROMs which holds the binary words used to generate the audio outputs of the assembly. One ROM contains "WHOOP WHOOP", a second ROM contains "TERRAIN" and the third contains "GLIDESLOPE".

A4A2 Synchro Demod not included in this end item.

A5 Monitor Logic Assembly containing the logic for the system status lamp drivers only.

A6 Glideslope Assembly includes input bias for source monitoring.

A7 Self Test Assembly for units without mode annunciators. It contains system status lamps only.

A8 Heatsink Assembly, no configuration changes for any of the end items listed.

A9 Code Identifier, refer to IPL Fig. 13 for configuration of this code identifier.

A10 External Counter Driver Assembly consisting of a Resistor network which provides interface between GPWC and the optional external counter, Part No. 964-0201-001 or -002. This external counter driver configuration is used when the warning mode annunciator option is included in the GPWC.

(7) GPWC Part No. 965-0376-081

A1 Power Supply Assembly does not include two diode inputs to the Master Inhibit Logic line which are included on certain Power Supply Assemblies.

A2 Comparator Assembly incorporates circuitry such that a Mode 3 (descent after takeoff) warning is given according to a takeoff altitude loss warning envelope. (Ref. Fig. 7).

A3 Audio Assembly does not contain an event counter.

A4 Voice Warning Assembly board containing two 16K and two 8K ROMs, which hold the binary words used to generate the audio outputs of the assembly. One 16K ROM contains the "WHOOP WHOOP" program, and the second 16K ROM contains the "GLIDESLOPE" program. The two 8K ROMs together contain the "PULLUP" program: One 8K ROM contains "PUL" and the other 8K contains "LUP" (PULLUP). The two 8K ROMs together are designated the A4A1 assembly. For replacement and future manufacture the A4A1 assembly has been superseded by a 16K ROM mounted on the A4 assembly.

A4A2 Synchro Demod not included in this end item.

A5 Monitor Logic Assembly containing the logic for the system status lamp drivers and the warning mode annunciator ball drivers. It is used when the warning mode annunciation option is included in the GPWC.

A6 Glideslope Assembly includes input bias for source monitoring. Glideslope soft warning boundary shifted slightly to a nominal 1.36 dots.

A7 Self Test Assembly for units with mode annunciators. It contains both system status lamps and mode warning annunciators.

A8 Heatsink Assembly, no configuration changes for any of the end items listed.

A9 Code Identifier, refer to IPL Fig. 13 for the configuration of this code identifier.

A10 External Mode Counter Driver Assembly consisting of a Resistor network which provides interface between GPWC and the optional external counter, Part No. 964-0201-001 or -002. This external counter driver configuration is used when the warning mode annunciator option is included in the GPWC.

Special Features; jumpers from J1A-22 to A9-5, from J1A-23 to A9-5, from J1A-7 to J1A-37, from J1B-26 to J1B-1 and from J1B-22 to J1B-34.

3. Circuit Description

A. Power Supply Assembly (A1) (Ref. Fig. 113)

(1) The Power Supply Assembly consists of the following functional circuits.

(a) Rectifier and Voltage Regulators BR1, VR7, VR8, Q1,Q2 and Q24

(b) Lamp relay drivers Q16, and Q17

(c) Flasher driver U8C, Q19, Q20

(d) Master Inhibit Logic Q6, Q7, Q8 and Q9

(e) Warning logic U2A, U4C, U5C, U7A and U7B

(f) Takeoff latch K1, Q10, Q11 and Q12

(g) Power Monitors, positive and negative,Q1 through Q5

(h) Aircraft configuration logic-various gates

(i) Enable time delays U8A, U8B

(j) Event recorder drive Q22 and Q23

(2) Power supply regulation is provided by two integrated circuit regulators VR7 and VR8, and two chassis mounted power transistors, Q1 and Q2. 20 vac from the chassis mounted power transformer is full wave rectified by bridge assembly BR1. The output of BR1 is unregulated ± 24 vdc. Each regulator is adjusted by potentiometers: R73 for VR7, and R80 for VR8. The output of each regulator is adjusted to 15 vdc ± 20 mvdc. Current limiting is controlled on VR7 by R77 and Q24. If the voltage drop across R77 caused by the output current flow exceeds the V_{BE} of Q24, current limiting begins. The level is nominally 400 ma dc. VR8 has a current limiting resistor, R78, on the unregulated input. A voltage drop of 0.8 vdc limits current to 400 ma dc.

(3) Anti-latching diodes CR51, CR52, CR53 and CR54 prevent the power supply from reverse biasing through the operational amplifier load during initial power application.

(4) Binary inputs from the two signal validities (Radio altimeter, and CADC), two output inhibits, and landing gear and flap inputs are combined with the terrain clearance, barometric rate, and glide-slope comparison signals to control the warning conditions listed below. (Ref. Fig. 12).

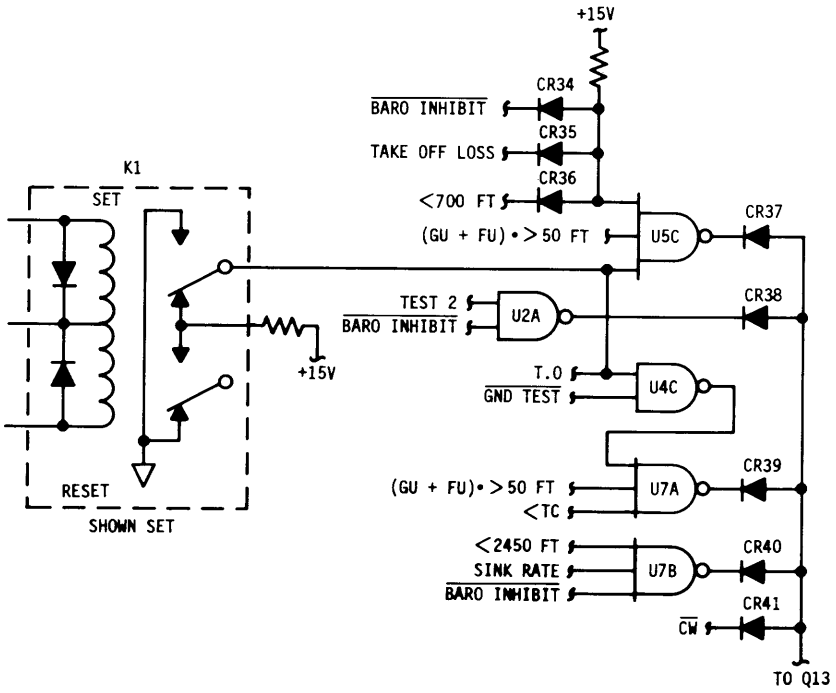

Warning Logic
Figure 12

(a) Descent during takeoff - Gate U5C combines the following five signals to switch the output low and initiate a warning.

1. Gear up or flap up logic above 50 feet.

2. Below 700 terrain clearance

3. Relay indicating takeoff mode

4. No baro inhibit

5. Takeoff loss

(b) Descent below minimum terrain clearance - Gate U7A combines the terrain clearance comparator A2-U3D with the latching relay output, which indicates cruise/landing mode, to switch the gate low, indicating descent below the curve of figures 9 or 10 with the landing gear or flaps up, above 50 feet.

(c) Closure warning A2-U3C will switch the warning bus low whenever the aircraft is operated below the curve of figure 6.

(d) Excessive sink rate - Gate U7B combines the sink rate comparator, A2-U2B, the 2450 foot comparator A2-U6D, and a baro enable signal to switch the gate output low and indicate excessive sink rate. Reference figure 5.

(e) A warning may also be generated by actuating an airborne self test. This switches gate U2A LOW and activates the light and audio signals directly. A detailed explanation of the self test function may be found in the last part of this section.

(5) These five warning conditions are all tied to a bus line controlling Q13 (Ref. Fig. 12). Assuming there is no MASTER INHIBIT condition existing, Q13 is normally ON due to the HIGH voltage level at its base. This holds the voltage level at U8B (+) below the (-) terminal, making the output of U8B LOW. With a LOW output, Q16 and Q17 are OFF, inhibiting the warning lamp relay; Q19 is OFF inhibiting the flasher output; and Q22 and Q23 are OFF, inhibiting the event recorder. If any one of the warning conditions are encountered, the bus line voltage level goes LOW, Q13 will be cut OFF and +15V will be placed at U8B(+), overriding the +10V at the (-) terminal and tripping the output (AWO #1) HIGH after a 1 second time delay due to C5. Q16, Q17, Q19, Q22 and Q23 will then be turned ON, activating the lamp relay, flasher and the event recorder. When the warning condition no longer is present, the bus line returns to a HIGH voltage level, Q13 is turned ON and U8B is tripped LOW, because the +15V supply is now dropped through R21, R22 and Q13. The warning outputs are thus inhibited.

The MASTER INHIBIT input can also serve to inhibit the warning circuitry. When the MASTER INHIBIT function is selected, either +28V will appear at the anode to CR1 or the cathode of CR2 will be grounded. This switches CR3 LOW, forward biasing it and removing the +15V from use in the warning circuitry, inhibiting it regardless of the warning bus line voltage level. Alternately, the inhibit signal passes via U6B, Q6 thru Q9 and CR27 to hold the AWO #1 line low, inhibiting warnings.

(6) The latch relay, K1, provides the cruise/landing and takeoff mode logic. The latch is in the reset position anytime the radio altitude exceeds 700 ft. The set position corresponds to a condition in which the landing gear is down (GD), the flaps are down or the aircraft is less than 50 ft and a ground test has not been initiated (FD+ $\leq$50.GT) and the aircraft has exceeded the terrain clearance envelope (<TC) (Figs. 9 and 10). With the relay in this SET position, a Mode 3 warning is possible under conditions determined by the other inputs to U5C, but Mode 4 warning is disabled by the LOW logic state at U7A-3 generated by the SET position of the latch. In the cruise (>700 ft.) mode, the relay is in the RESET position which disables a takeoff warning but which arms the terrain warning. When the landing gear and flaps are lowered preparatory to landing, the mode 4 warning is disabled. The relay will switch to the SET position when the nominal TC envelope is penetrated, but a takeoff warning will not be initiated since the gear and flaps are down. The magnetic latch thus ensures correct sequencing of the Mode 3 and Mode 4 warnings, and will remember its operational state in the event of momentary power loss.

(7) Q2 and Q3 provide a 15V power monitor. As long as the positive supply is higher than +13.6V and negative supply is smaller than -18V, Q3 will be on and Q2 will be off. This will arm the warning modes. If the positive supply drops below +13V or the negative supply exceeds -18V, Q3 will turn off, Q2 on and CR5 on power supply, Part No. 722-1799-005 or CR3 on power supply, Part No. 722-1799-004 will be forward biased inhibiting a warning. In the same way, Q4 and Q5 function as the other 15V power monitor. As long as the negative supply is larger than -11.7V and the positive supply is below +17.7V, Q5 will be on, Q4 will be on and CR6 will be reversed biased, arming the warnings. When the negative supply decreases below -11.7V or the positive supply exceeds +17.7V, CR6 will be forward biased, inhibiting the warning modes. Q1 also provides a gross -15V inhibit monitor. With -15V on the gate of Q1, Q1 will be off. If the -15 volt level drops to zero, Q1 will forward bias CR4 and inhibit a warning. The fourth inhibit logic on the bus line controlling Q6, is the master inhibit logic from the monitor logic assembly A5. Loss of radio altitude signal or validity, or loss of +24V power will turn Q6 on and inhibit all warnings.

(8) U8D, Q14, and Q15 are used to control and drive the GPWC validity relay. If the GPWC is in a valid state ($\overline{\text{INHIBIT}} \cdot \overline{\text{BARO INHIBIT}} \cdot \overline{\text{G/S FAULT}} \cdot \overline{\text{TEST 2}}$) then +15v will be applied to U8D(+). Because U8D (-) is biased at +5.15V by R38 and R39, the output of U8D will be positive. The positive output holds Q14 and Q15 ON which energizes the validity relay. When any of the above conditions is not true (e.g. INHIBIT + BARO INHIBIT + G/S FAULT + TEST 2), then the +15V on C7 thru R40 will be dropped through either CR26, CR27, CR28 or CR31. If either INHIBIT + BARO INHIBIT + G/S FAULT become true , C7 will begin to discharge through R36. After approximately 5 seconds, the voltage at U8D (+) will be less positive than the

voltage at U8D (-) and the output of U8D will switch negative, turning Q14 and Q15 OFF and deenergizing the relay. If TEST 2 is true, the +15 vill be removed from U8D (+) immediately and there will be no time delay before deactivation. When the GPWC returns to a valid state, the +15v will again be applied to U8D (+), switching its output positive, turning Q14 and Q15 ON, and energizing the validity relay.

(9) Gates U3D, U4B and U4D are used to force a gear down and flap down condition below 50 feet. Flap position, radio altitude and test status are combined to make the output of U3D high when FD + <50 ft. U3D is low when FU • >50 ft. The output of U4D is high when (GU + FU) • >50 ft. U4D is low when (GD • FD) + (<50 ft• $\overline{\text{GND TEST}}$).

(10) Gates U4A and U5B control the G/S ENABLE output, along with U3B and CR9. For the glideslope to be enabled the following conditions must be met:

No master inhibit from Q9 thru CR9 or CR57

Gear down except during airborne test from U4A thru CR10.

Above 50 feet except during ground test from U3C thru CR11.

Aircraft on approach (above Fig.10) or in take off mode (below Fig. 10) with flaps down and no ground test in progress.

Lack of any of these conditions will inhibit the glideslope warning. Additional glideslope logic is covered in para. G.

(11) Gates are connected to the front panel push button (on the GPWC chassis), the cockpit self test button, the 1000 ft. comparator, and the gear status indicator to generate the following logic statements.

Gate U3C- >50 ft + Ground Test from cockpit or GPWC front panel.

Gate U2B- Ground Test = Cockpit Test or front panel test and below 50 feet.
Gate U2D - $\overline{\text{Air Test}}$ = Gear down, or inhibit, or below 1000 feet,or no test actuation from cockpit or front panel.

(12) Operational Amplifier U8A serves to provide a 5 second time delay between the end of either a Ground Test or an Air Test, and the re-arming of the warning circuitry and event recorder output. Normally, CR17 and CR18 are reverse biased and +15v is applied to (+) terminal of U8A. Since the voltage of U8A(-) is +10v, the output will normally be +15v, arming the warning outputs and Q22. When either an Air or Ground Test is under way, CR17 or CR18 will forward bias, the +15v at U8A(+) will be removed and its output will switch negative. CR20 will then become reverse biased, because $\overline{\text{Test 2}}$ is low. When the test input is removed, CR17 and CR18 are reversed biased again but the voltage at U8A (+) does not immediately rise to +15v. The +15v begins charging C12. The time constant of C12 and R66 provides a 5 second delay before the U8A (+) voltage rises above the bias on U8(-) and trips its output positive, again arming the warning circuitry and the event recorder output.

B. Comparator and Closure Warning Assembly (A2) (Ref. Fig. 114)

(1) The A2 Comparator Assembly consists of the following functional circuits:

(a) Buffer Amplifier U4A

(b) Linearizer U4D, U7B, Q4 and Q5

(c) Filter amplifier U7A

(d) Radio rate generator/limiter AR2, CR13-16

(e) Radio rate bias U6A, U6B, Q6, Q7

(f) Trip equation U2C

(g) Baro rate filter and buffer AR1

(h) Baro rate ground test boost U3B, Q2

(i) Baro threshold scaling amplifier U2D

(j) High baro sink vs altitude comparator U2B

(k) Complementary filter AR3, Q8

(l) Closure warning comparator U3C

(m) Terrain clearance detector bias U3A, Q9

(o) Radio altitude detector U5D, U5B, U5C, U5A, U6D

(p) Mode 3 detector

1. Takeoff Rate Mode 3 detector U2A
or
2. Takeoff altitude loss Mode 3 detector U1

(q) Radio altitude bias circuit U4B

(r) Alternate mode program Q1, Q3, Q4 on piggy back assembly (A2A1) (Models equipped with alternate Mode 1 and Mode 4 only)

(2) Amplifier U4A buffers the radio altitude input signal and scales it to a value of 8 mv per foot for altitudes of less than 480 feet. A stage gain of 0.4 is determined by R30, R31, R32, R39, R40, and R107. Anytime other than during ground self test, ST A will be -15v and the output of U4B is nominally 0v. R108 injects a signal to bias U4A such that when the altitude is 0 ft, the +0.4v signal remaining at the input is cancelled, yielding an output of 0v.

(3) Above 480 feet the radio altitude input becomes nonlinear (Ref. Fig 13). The function of U4D, U7B, Q4 and Q5 is to linearize this signal. When the output of U4A is low, the current flowing through R86 will drive integrator U4D to +0.5v where CR10 will pass current, clamping it at that level. The output of U7B will be +13.5v, turning Q4 and Q5 on. When the output of U4A becomes greater than +3.84v (480 ft), the current flowing through R83 will be greater than the current through R86 and the output of U4D will move negative, holding pin 13 at 0. When U4D reaches -1.5v, the comparator

U7B will flip negative, turning Q4 and Q5 off. Additional current will flow to the integrator through R110, R112 and R85, and its output will move positive again. When it reaches 0v, comparator U7B will flip positive again, turning Q4 and Q5 on and the cycle repeats.

As the output of U4A increases, integrator U4D will have to move negative faster when Q4 and Q5 are on and when off, U4D will return positive slower. Thus, Q4 and Q5 will stay off for a longer part of each cycle as the radio altitude increases. When the output of U4A becomes greater than +10.8v, the positive current through R83 and R85 will be greater than the negative current through R86, R110 and R112, and the integrator output will not return to 0. Q4 and Q5 will remain off.

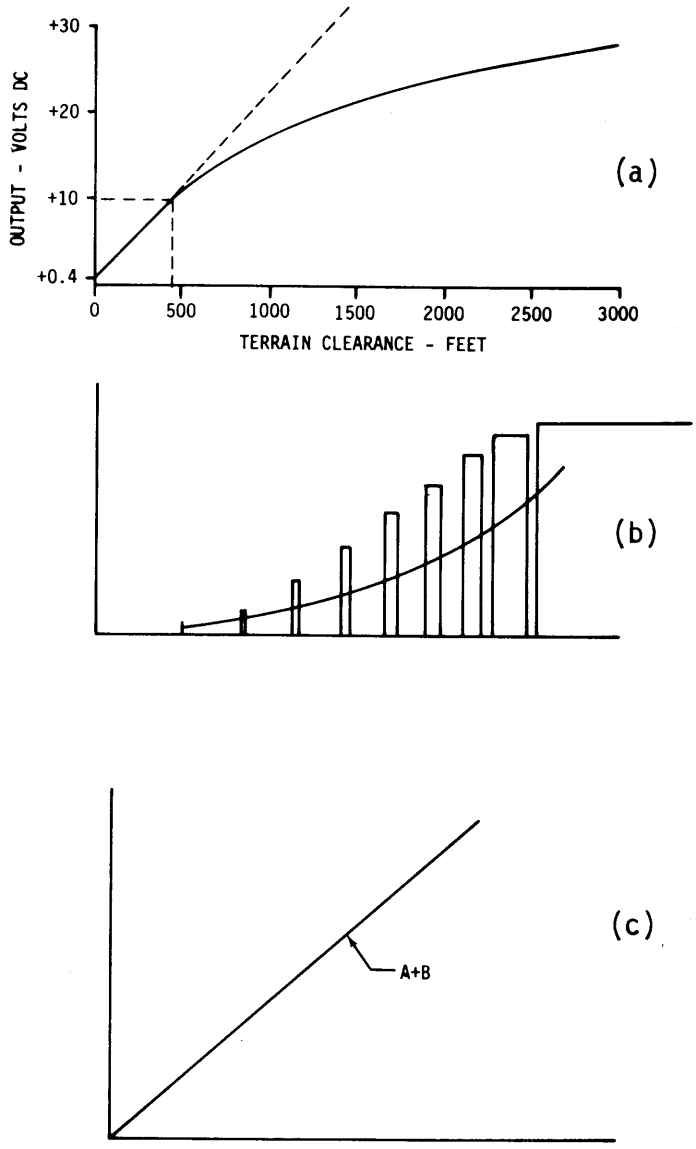

Linearizer Signals
Figure 13

(4) During the time Q4 is off, the signal determined by R82, R84 and the output of U4A is allowed to pass through R42, adding to the signal coming through R41. As the signal gets larger, both the magnitude and the length of the added pulses increase (Fig. b), boosting the output of inverting filter amplifier U7A and yielding H_R LINEAR at -4mv per foot. C4 serves to filter out the pulses.

(5) Radio rate generator/limiter AR2 differentiates the -4mv/ft. output of U7A to produce an altitude rate signal. C5 and R48 scale the output to 0.67v/kfpm (40 mv/fps). R45 and C6 reduce the high frequency gain and stabilize the circuit. CR11 and CR12 clamp the input to ±0.5v. A negative output = descent.

The bridge circuit output limiter consisting of CR13 - 16, R50, R94 and R95 works as follows: When operating near ground potential, current supplied by R50 and R94 will flow through the bridge, keeping the cathodes of CR13 and CR14 within about a diode match of each other. Feedback taken from the cathode of CR15 through R48 holds pin 2 of AR2 at ground potential and the circuit functions as if the bridge were a simple connection. As the output moves away from 0v, R95 will draw current. This current is supplied by R50 if positive or by R94 if negative. If positive, a point is reached (+0.74v) above which R50 can supply no further pull-up current to R95. The output at pin 6 of AR2 will continue positive but can only supply pull-up current to R94 and CR14. CR13 and CR16 will not conduct, leaving R50, CR15 and R95 as a passive voltage divider with the output limited at +0.74v or +1100 fpm. A similar limit is reached in the negative direction.

(6) The radio rate bias circuit consisting of U6A, U6B, Q6 and Q7 injects a bias into the input of the rate generator circuit above through R49. The bias level, as shown below is dependent on airplane configuration and radio altitude.

Condition	Bias Voltage applied to R49	Sinkrate required to produce 0v output from the radio rate generator/limiter
< 50 ft · $\overline{GT}$	-0.35	510 fpm
< 200 ft · FD	-0.35	510 fpm
> 200 ft · FD	-1.33	2000 fpm
FU	-2.0	3000 fpm

Above 50 ft with the flaps up, Q6 and Q7 are off. Voltage divider R161 and R103 establish a -2.0v bias to R49. The negative input of U6A is referenced at +7.5v by R90 and R93. If (FD + <50 ft) (actually FD + <50 ft · $\overline{GT}$) is true, the positive input of U6A becomes +15v and the resulting positive output turns Q7 on. R102 now reduces the bias to -1.33v. The negative input of U6B is referenced at +10v by R116 and R117. If in addition to "FD+ <50 ft",<200 ft. is true, then the positive input of U6B will be greater than +10v and U6B will turn on Q6. R100 together with R102 will reduce the bias to -0.35v. This bias is also introduced through R52 to the "trip equation" circuit discussed below.

(7) The output of the radio rate generator/limiter (e) is combined with the bias signal in summing amplifier U2C with a further fixed bias added by R97. The signal at the junction of R96, R97 and R51 is determined by their values to equal 0.479e + 0.636. R53 and R51 determine the gain from this point to the output of U2C. R53 and R52 determine the gain to the bias signal so that the output of the "trip equation" circuit equals -4.65e -6.21 -4.76v bias. This output, illustrated in Fig. 14, is combined in the complementary filter with the baro rate.

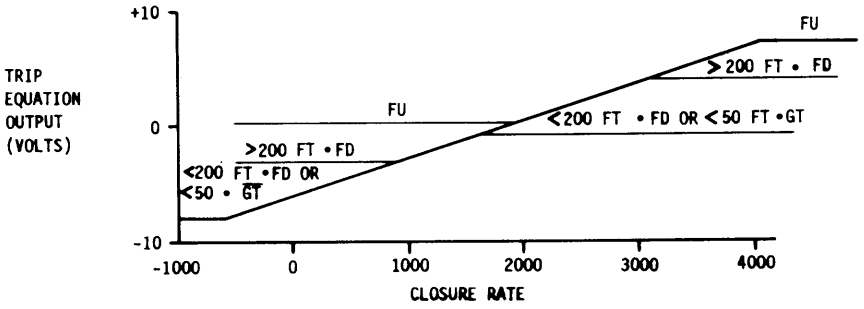

Trip Equation Output
Figure 14

(8) The 0.67v/kfpm "Baro rate #1" signal from the audio board goes through a 2 second lag filter to unity gain buffer AR1. The output (Baro #2) has a scale of +0.67 v/kfpm ascent.

(9) The "baro #2" signal is fed to the inverting input of U3B. Normally ST A = -15v and Q2 is on. Thus, the stage gain of -0.2 is determined by R56, R55 and R57, and the output is +0.13v/kfpm for descent. During ground self test, ST A is +15, Q2 is off and the stage gain is unity, a boost of X5.

(10) The "baro rate threshold scaling amplifier" U2D establishes a threshold level for the "hi baro sink vs. altitude detector". Input is provided from "baro #2" with a scale factor of -0.67 v/kfpm sink rate. A bias is injected through R62 such that the output is negative for sinkrates less than 1300 fpm. Below 2360 fpm CR7 will not conduct so the gain is determined by R65 and R61 at -6.5. For sinkrates greater than 2360 fpm, the current through R64 will overcome the bias through R63 and CR7 will conduct, reducing the gain to -3. The resultant output is shown in Fig. 15.

On models equipped with alternate Mode 1, the bias above is generated on the piggyback board by R12, R13 and R14. When alternate is programmed, Q4 is off and only R13 and R14 affect the bias. This alternate is shown in Fig. 15.

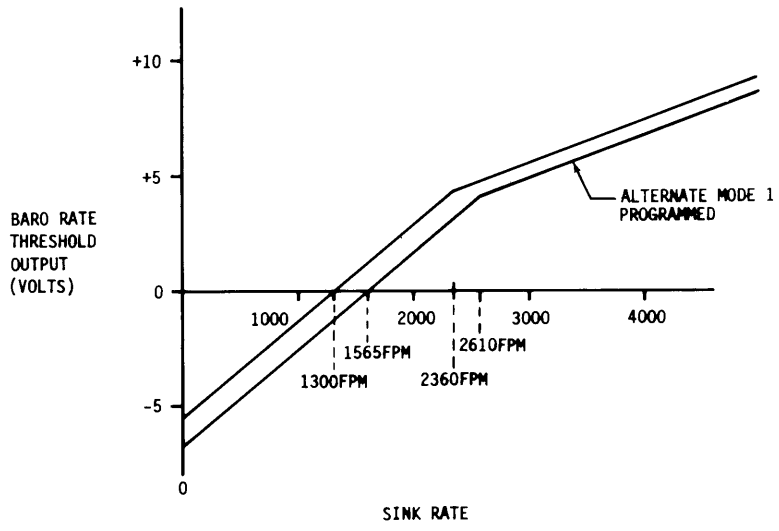

Baro Rate Threshold Output
Figure 15

(11) The high baro sink rate vs. altitude comparator combines the output of U2D through R67 with the "H_R LINEAR" signal of -4 mv/ft through R71. When the sink rate is too great, the positive input of U2B will be greater than the 0 reference at pin 6 and the output will flip positive. CR18 clamps the negative output to -0.5v. A positive output indicates penetration of the Mode 1 warning area (excessive sink rate).

(12) The baro rate signal is coupled to buffer AR3 through high pass filter C8 and R60 while the sink rate signal from the "trip equation" output is fed through low pass filter R60 and C8. If the landing gear is up or has not been down since the plane dropped below 700 ft. radio altitude, "gear down latch" will be

negative and Q8 will be on. R105 will change the time constant of the complementary filter from 5 seconds to 3 seconds.

(13) The closure rate information from the complementary filter is fed through R73 to the "CW comparator" U3C. "H_R LINEAR" is also fed to U3C through R74. When the filter output exceeds the magnitude of "H_R LINEAR," the output of U3C will flip negative. CR19 will clamp "$\overline{CW}$" to -0.5v, indicating penetration of the mode 2 warning area (excessive terrain closure rate). R78, R81, R164 and R77 provide a small amount of feedback and the required bias current to the positive input.

(14) The TC bias circuit modifies the mode 4 (inadvertent proximity to terrain) warning envelope depending on the state of the "GDL" signal. Limiter amplifier U3A, CR26 - 29 operates similar to AR2, CR13 - 16 discussed in para. (5) above. If "GDL" is low (-15V), CR17 will conduct, biasing the output to a value, limited by R123 and R162, of +3V. If "GDL" is high, CR17 will not conduct and the output will be controlled by baro #2. R119 injects a signal equal to a -6.83v output but the output is clamped by R128 and R123 at -3v. Thus, a sinkrate of greater than 600fpm (-0.4v) is required before the output changes. If "mode 4 prgm" is grounded, CR30 will conduct, turning on Q9. R129 will parallel R128, allowing the signal to swing to -5v before limiting. In this state a sink rate greater than 300fpm (-0.2v) is required. In the active region of the output, the gain is determined by R122 and R120 and the output equals -6.83 -9.6·BARO #2. The positive limit is reached at a sinkrate of 1450 fpm.

On models equipped with alternate Mode 4, programming turns Q3 on the piggyback board off, allowing R8, R9 and R10 to alter the output of the TC bias circuit. R129 is also changed, moving the programmed limit voltage from -5v to -4v. In this state, a sinkrate greater than 1300 FPM(-0.87v) is required before the output is in the active region. In the active region, the output equals -18.7 - 17.1· Baro No.2. The positive limit is reached at a sinkrate of 1900FPM.

(15) The terrain clearance detector U3D accepts signals from the TC detector bias circuit through R124 and from H_R LINEAR through R125. The negative input is referenced to -1.2v by R132 and R133. When the combined input from H_R LINEAR and the bias circuit is more positive than -1.2v, the output of U3D will be positive, indicating penetration of the mode 4 warning envelope (inadvertant proximity to terrain). If the landing gear is up (GDL negative), this will occur when H_R LINEAR is less than 500 ft. (-2v), generating sub-mode 4A. If GDL is positive, the result will be the sub-mode 4B envelope. CR31 clamps the negative output at -0.5v.

(16) The negative input of comparator U5D is referenced at -0.2v. If the radio altitude is <50ft., the reference voltage will cause the output to be positive. Feedback through R138 requires H_R LINEAR to reach -0.4v(100 ft) before the output swings negative and <50 ft. becomes a logic 0. CR21 will clamp the output at -0.5v and the feedback in this state will have little effect.

When the aircraft descends, the output of U5D will flip positive when H_R LINEAR becomes less negative than the reference (-0.2v) at 50 ft. Altitude detectors U5B, U5C, U5A and U6D operate in a similar manner but with the reference points adjusted to yield logic signals at 200 ft, 700 ft, 1000 ft and 2450 ft respectively when H_R LINEAR has a scale factor of -0.4v mv/ft. During ground self test ST A becomes high, CR20 conducts and <50 ft stays at logic 1.

(17) The takeoff rate Mode 3 detector, U2A, compares baro rate data from the baro rate filter and radio altitude data from H_R LINEAR.

A small negative bias is generated by R7, R6 and R5, assuring a negative output for 0 input conditions. H_R LINEAR is applied to the positive input via voltage divider R4 and R5 which reduces it's magnitude to 0.11 H_R LINEAR. When BARO #2 is more negative than 0.11 H_R LINEAR - 0.025, the output will swing positive, indicating penetration of the takeoff rate Mode 3 warning envelope. CR1 clamps the logic 0 output at -0.5v.

(18) The takeoff altitude loss Mode 3 detector consists of U1A through D. With the airplane on the ground or up to an altitude of 100 ft., $\overline{\text{INTEGRATE}}$ will be high, forcing the output of U1C negative, turning Q1 on. Q1 on shorts C1 and effectively reduces the gain of U1D to 0. Thus the output is 0.

The baro #1 input has a scale factor of 0.67v/kfpm where + equals ascent. As long as this signal indicates ascent, the output of U1A will be negative, CR6 will conduct, making the positive input to U1B negative. With the negative input referenced at +0.11v, the output of U1B will be negative and clamped at -0.5v by CR8. If the baro rate signal should become negative, indicating altitude loss, the output of U1A will be positive, CR6 will not conduct.

When an altitude of 100 feet is reached, <50 ft will become a logic 0 and logic on the power supply board will set $\overline{\text{INTEGRATE}}$ to 0. If the baro rate signal remains positive, the output of U1C will remain negative and Q1 will hold C1 to 0. If the baro rate becomes negative indicating descent, U1C will flip positive and turn Q1 off. Positive feedback through R11, R10 and CR5 will tend to hold it in this position. The output of integrator U1D will move positive at a rate depending on the baro rate signal, thus giving an altitude lose output . With the baro rate negative, U1A will swing positive and

CR6 will not conduct. If the altitude lose output of U1D becomes enough greater than H_R LINEAR, the positive input of U1B will become greater than $\pm$0.11V and the output will swing positive, indicating penetration of the Mode 3 warning envelope.

If the descending condition is corrected, the baro rate signal will become positive, canceling the alarm (through U1A). As altitude is regained, integrator U1D will move negative. When enough altitude has been gained, U1C will swing negative, turning Q1 on and resetting the integrator to 0.

(19) Normally ST A is -15v, CR9 will not conduct and Q3 is turned on, producing 0v at the output of integrator U4B. During ground self test, ST A will become +15v. CR9 will conduct, injecting a signal through R34 into the positive input of U4A. Q3 turns off and the output of integrator U4B moves negative at a rate determined by R36 and C22 equivalent to an altitude loss of 130 fps. After 3 seconds, the output of U4B limits, leaving a net altitude input of 200 ft.

C. Audio Assembly (A3) (Ref. Fig. 115)

(1) The A3 assembly consists of the following functional circuits:

(a) High impedance buffers U3A, Q15, U1A and U1B for the three barometric rate signals and reference circuit U2B and U3B.

(b) Input buffers U8A and Q3 and logic for the $\overline{\text{BARO INHIBIT}}$ function.

(c) Flaps up logic U7B, U4, U2A, U2D

(d) Gear up logic U7A, U7C, K1 and U2C

(e) Audio output amplifier U5 and U6

(2) One purpose of the A3 assembly is to provide high impedance buffers for the three barometric rate signals. Scale factor for the dc signal input is 500 mvdc/1000 fpm. The CADC signal generator is similar to a potentiometer with +V reference connected to one end, -V reference connected to the other end, and the wiper providing the signal. The GPWC corrects for reference voltage variations that would change the zero point. A non inverting signal gain of 1.33 is provided by R10, R57, R58, R60, R61, R11, R12 and U1B. This converts the input scale

factor of 500 mvdc/1000 fpm or 30 mvdc/fps to the GPWC scaling of 40 mvdc/fps. Q1 is used to shunt the input signal to ground when the aircraft is on the ground (radio height <50 feet). This is necessary to inhibit the false sink rate produced by the CADC during transient aerodynamics of aircraft rotation and initial lift off. During ground self test, a -3000 FPM (-2 V) signal is produced at the output of U1B as follows: The ST A signal switches to +13.5 vdc producing a negative signal at the output of U3A via R8, R62, R98 and CR14. This signal, chopped by Q2, produces +2 vdc at the output of U1A which is inverted by U1B.

(3) Signal scaling for the most common ac barometric rate is 250 mv/1000 fpm. U3A provides high input impedance and common mode rejection. Output is 250 mvac per 1000 fpm. The higher scale factor ac signal, 581 mv/100 fpm, is brought into U3A through R1 and R4 where the scale is reduced to 250 mv/1000 fpm.

The output of U3A is demodulated by Q2 which is controlled by reference circuit U2B and U3B. Phasing is such that when the barometric rate signal is in phase with the ac reference, indicating ascent, the positive portion of U3A is allowed to pass by Q2 to inverting filter amplifier U1A. Similarly, during descent, the rate signal is out of phase with the reference and the negative portion of U3A output reaches U1A. At radio altitude < 50 feet, Q2 is used to shunt the ac rate signal to ground similar to the dc rate. This is accomplished by Q15 through R16.

The reference circuit Q17, U2B and U3B will accept either a 115 vac or a 26 vac reference signal. During the negative portion of the cycle, C38 will be charged through CR1. If a 115 vac signal is present, the charge on C38 will be large enough to turn on Q17. Thus, the signal will be reduced to the proper level by R93 and R92. VR26 clamped the signal to +0.5v and -18v. If Q16 is on, current supplied through R101 will cause the output of integrator U2B to move in a negative direction. When the sum of it plus the input signal through C35 and R19 is less than 0, the output of U3B will become negative, turning Q16 off. The input signal will now drive the integrator through R90 and R89. As the signal becomes more negative, the output of the integrator becomes more positive. When the sum of the input signal and the integrator signal at U3B becomes positive, comparator U3B flips positive, turning Q16 on and the cycle repeats. Wave forms are shown in figure 16. If the magnitude of the reference signal increases, the length of time (W) that the output of U3B is negative will decrease. Since Q2 will allow signal to pass only during the

time (w) that U3B is negative, this circuit will automatically compensate for changes in the baro rate signal due to a change in the reference signal.

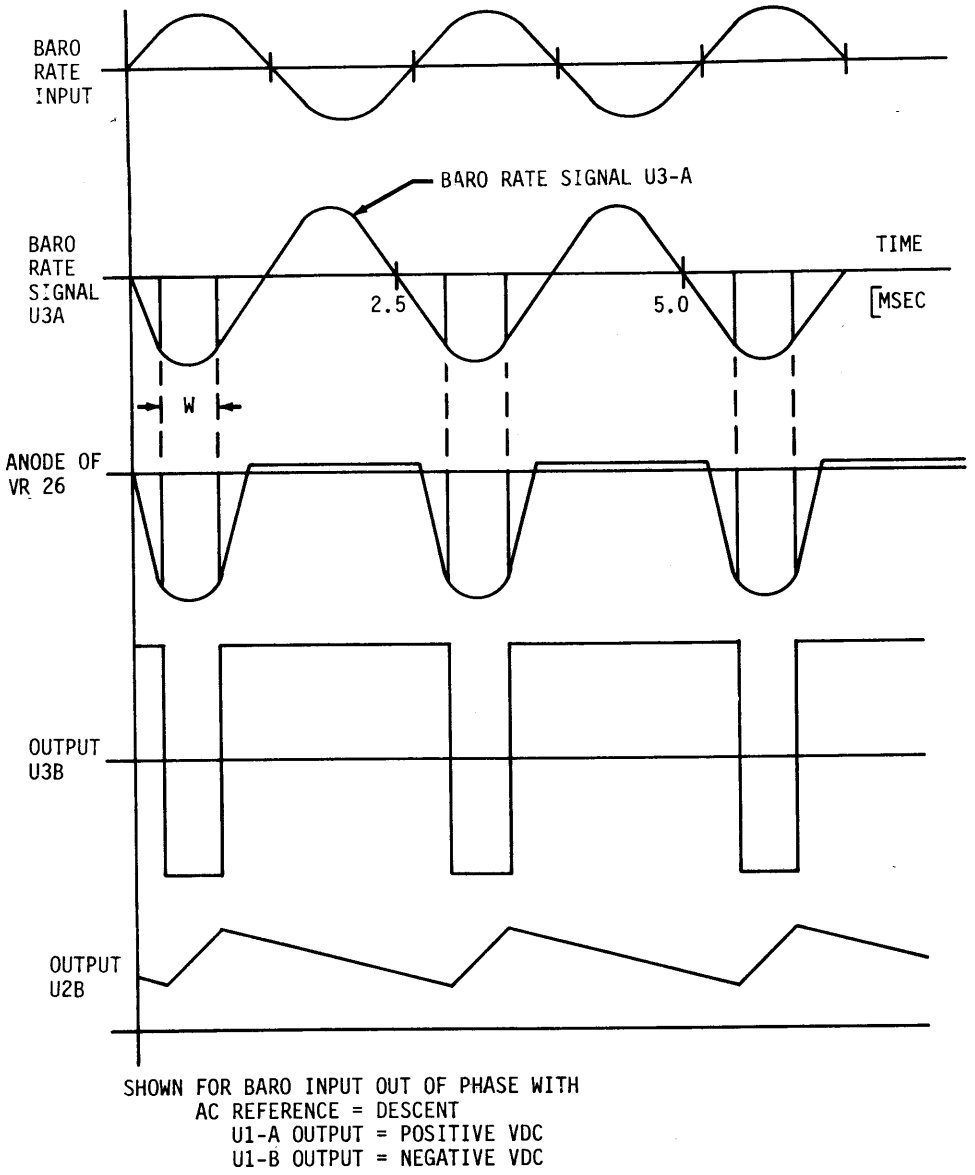

Timing Diagram
Figure 16

Inverting filter amplifier U3B averages the input signal and scales it to the 40 mvdc/fps GPWC scaling. Inverting filter amplifier U3A operates as a unity gain summing amplifier.

for the ac and dc rate signals. Only one type of barometric rate signal will be present on a given aircraft. The unused inputs will be grounded by the plane's wiring.

(4) Validity of the baro rate is monitored by four inputs, all of which must be true for a low state at the BARO INHIBIT output.

(a) If +28v is not present at the baro rate validity input, the output of U8A will change to a high state, driving current through CR15 and turning Q12 on, Q13 off and Q14 off. The input to U8B becomes high and the output of U8B (BARO INHIBIT) becomes a logic 0. C24 provides a short time delay when the inputs go from an invalid state to a valid state.

(b) If the altitude synchro to rate converter (option 073) is active, it will supply the validity signal to the input of U8A as above.

(c) When the baro rate reference signal is present at the output of U3B, CR3 and CR2 will rectify the signal, charging C10 and turning Q4 on. If the signal is not present, Q4 will shut off which in turn shuts off Q5. Current will flow through R32 and CR16 turning Q12 on as above.

(d) The baro rate monitor input (J1A-7) must be connected to a low source impedance. The circuit consisting of Q3, C5, C6, C7, R23, R24, R29, R85 and R88 will oscillate at about 15khz. This signal, rectified by CR4 and CR5, will charge C11 and turn Q5 on. If a low source impedance is not present at the baro rate input, Q3 will not oscillate and Q5 will shut off. Current will flow through CR16 and turn on Q12 producing a logic 0 at U8B.

(e) When all inputs become valid after one or more having been invalid, Q12 turns off allowing R67 to charge C19. When the charge on C19 reaches the threshold voltage (8.5v) set by VR17, current will flow through VR17 turning Q14 on and producing a logic 1 at the BARO INHIBIT output. The time delay of about 3 seconds produced by R67, C19 and VR17 allows the baro rate and associated circuits time to stabilize before becoming valid.

(5) A choice of two flaps logic inputs are available. If a flaps up condition grounds the "flaps up gnd ." (J1B-24) input, CR20 conducts producing a logic 0 at the flaps down output of U7B. Alternately a +28V signal at the "flaps up +28V" input causes CR21 to conduct also producing a logic 0 at the FD output of U7B.

If "gnd program flap invert' (J1A-14) is not grounded, pins 1,12 and 13 of U4 will be logic 1, setting pins 10 and 11 to logic 0 which forces pin 8 to a logic 1 (+15V). CR8 will not conduct. In this state, a logic 1 at the FD output of U7B drives pins 6 and 2 of U4 to a 0 which makes pin 3 +15V. A 0 at FD drives pins 6 and 2 to a 1 state which forces pin 3 to a logic 0 and CR7 will now conduct. Alternately, "gnd program flap invert" (J1A-14) may be grounded which will invert the programming as follows: CR6 conducts setting pins 1,12 and 13 at logic 0 and therefore pins 3,10 and 11 at logic 1. In this state a 0 at FD makes pin 8 a logic 1 whereas a 1 at FD makes pin 8 a logic 0 and CR8 conducts.

When both CR7 and CR8 are in a nonconducting state (flaps down condition) then R74, R75 and R76 serve as a voltage divider setting pin 2 of U2A at +2.9V. Thus, the output of U2A will be at -15V and the output of U2D will be at -15V. CR18 clamps the "flaps up logic" (ATE31) to -0.6V or a logic 0. If either U4A or U4C is a 0, CR7 or CR8 will conduct and the junction at R75, R76 and R77 will shift to -0.6V. C26 will charge and the output of integrater U2A will be a positive going ramp with a rate of 6V per second. When it reaches +0.45V the output of U2D will flip to +13.5V yielding a logic 1 at the "flaps up" output. This delay of about 2.5 seconds is necessary to avoid potential nuisance warnings if the aircraft continues to descend momentarily after initiation of a missed approach. A similar but shorter delay will be encountered when going from a flaps up state to flaps down.

(6) A choice of two gear logic inputs are available. If a +28V signal at "gear down +28V" (J1B-7) or if "gear down gnd" (J1B-23) is grounded, then either CR22 or CR23 will conduct and the output of U7A will become a logic 0, forcing the "gear down" output of U7C to a logic 1. C34 provides a short time delay when going from a gear up to a gear down state.

(7) K1 and U2C serve as a latch such that a transient or momentary power loss will not cause the GPW Computer to forget it's operational state. If the radio altitude is above 700 feet, a logic 0 will be on the <700 feet line making the output of U8C a logic 1. VR11 will conduct turning the reset driver (Q11) on. In this

state a "gear down logic" 1 will produce +1.5V at pin 10 of U2C while pin 9 is +0.5V, forcing the "gear down latch" output of U2C to a logic 1 (+13.5V). A "gear down logic" 0 similarly forces the output of U2C to a logic 0 (-15V). If < 700 feet is true, Q11 will be off and the reset function is inactive. In this state a "gear down logic" 1 will turn Q10 on and place K1 in the set position as shown, producing a logic 1 at the output of U2C. K1 will remain latched in this position until a radio altitude greater than 700 feet with the gear up resets it. A logic 1 at "self test A" will produce a 0 at the output of U2C regardless of other inputs.

(8) The remaining function of the A3 assembly consists of audio output amplifiers U5 and U6. U5 drives T1 and T2 which provide 600 ohm outputs. U6 drives a 32 ohm output and T3 which provides an 8 ohm output. R42 and R43 control the output levels of U5 and U6 respectively.

D. Voice Warning Assembly (A4) (Ref. Fig.116)

(1) The A4 Voice Warning Assembly consists of the following functional circuits:

(a) Sequence control logic U5, U6A and U6B

(b) Master Clock U8

(c) ROM select and addressing logic U11, U16, U17 and U18

(d) Clock interrupt detector U14B and interrupt control U7

(e) Digital to analog converter U13

(f) Audio output amplifier U12

(g) Audio attenuation control Q3 and Q4

(h) Reduced audio level shift register U2

(i) Power-up disable circuitry Q1, Q2 and Q5

(2) The purpose of the A4 assembly is to provide proper sequencing for the GPWC audio warnings. It holds the sequencing circuitry, the audio memory and the audio output preamplifier and volume controls. There are two possible warning outputs from this assembly: a "WHOOP WHOOP PULL UP" warning for warning Modes 1, 2, 3, and 4, and a "GLIDESLOPE" warning for a Mode 5 warning condition. The

general volume level of the "WHOOP WHOOP PULL UP" warning may be reduced after a preselected number of consecutive warnings. The word repetition rate and the volume level of the "GLIDESLOPE" warning will vary depending on the position of the aircraft relative to the glideslope.

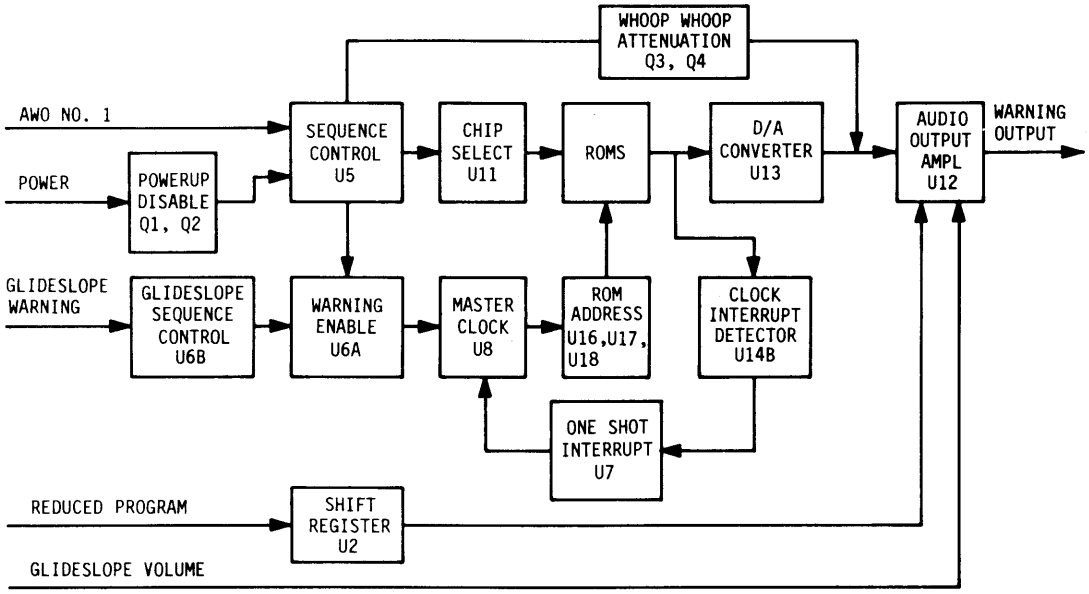

Voice Warning Block Diagram
Figure 17

(3) The preset logic (Q1 and Q2) assures that the audio warning logic will be in its initialized (non-warning) mode when power is applied to the system. This eliminates the possibility of a nuisance warning when power is applied.

(4) The warning enable buffer U9B provides interface between the logic levels of the AWO No. 1 signal from the A1 assembly and the A4 assembly sequencing controls.

(5) In the non-warning state gate U14A-6 is at a HIGH logic state which, in turn holds U8-7 LOW, inhibiting U8, the master clock generator. When either a "WHOOP WHOOP PULL UP" (AWO No. 1) or a "GLIDESLOPE" warning is to be initiated, U6A-$\overline{Q}$ will be switched from its normally LOW logic state to HIGH. This switches U14A-6 LOW and U8-7 HIGH, enabling U8.

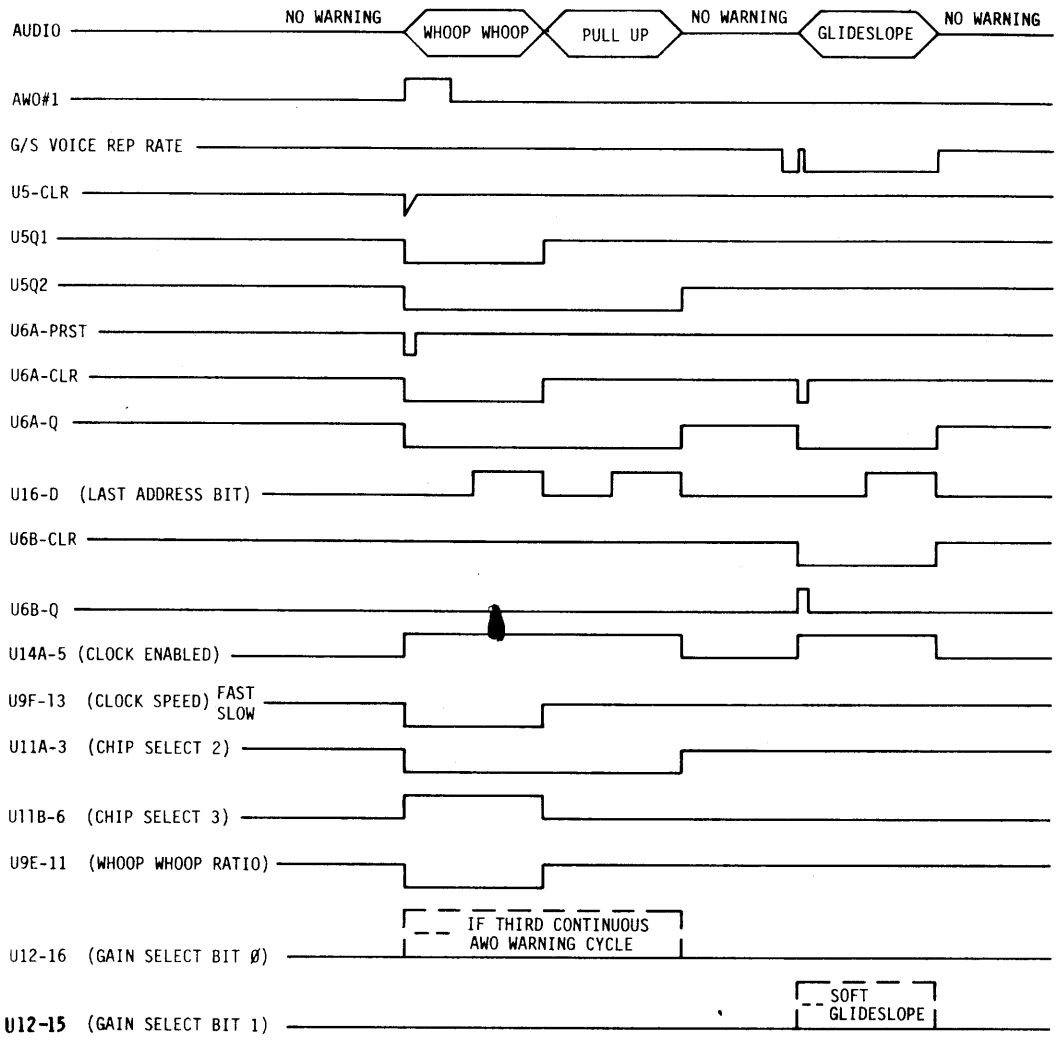

Timing Diagram
Figure 18

(6) When an AWO No. 1 warning is to be given, the AWO No. 1 signal causes a LOW logic level at U10A-3 which briefly switches U5-CLEAR LOW. This switches U5-Q1 LOW and U5-$\overline{Q1}$ HIGH. The HIGH logic level at U5-$\overline{Q1}$ puts U10D-12 HIGH. U10D-13 is already HIGH because of the HIGH input from U4C. U10D-11 goes LOW switching U6A-Q to a LOW state and U6A-$\overline{Q}$ HIGH. This enables the master clock generator.

(7) The clock pulse generator is now enabled and will begin supplying clock pulses to the address registers -U16, U17, U18. The sequence control logic has already provided a chip select word to U11A and U11B. A truth table for chip select words is given below:

(CS2) U11A	(CS3) U11B	CHIP SELECTED
0	$\underline{0}$	"PULL UP" (TERRAIN)
0	1	"WHOOP WHOOP"
1	$\underline{0}$	"Glideslope"
1	1	NOT USED

(8) The memory will read the chip select word from U11A and U11B and the address provided by U16, 17, 18, and output the 4-bit binary word stored at that address with one read/output cycle for each clock pulse received. Each 4-bit word appears at the clock interrupt detector (U14B) and the input buffer for the digital/analog converter (U15A, B, C, D).

(9) To get maximum efficiency from the available memory space, one of the 4 bit digital words (all ones) was reserved as a clock interrupt word. This word is used to provide the space required between words without devoting large areas in memory to non-information data. When a clock interrupt word appears at the clock interrupt detector U14B, the $\underline{\text{U14B}}$ output goes LOW, switching U11D HIGH, triggering U7-$\underline{\text{O}}$ LOW, inhibiting the master clock pulse generator for the time period determined by R45, R46 and C31, typically 25 msec.

(10) Each four bit word also appears at the digital/analog converter through a buffer network U15-A, B, C, D. The D/A converter converts these digital words into analog levels, with 15 analog levels possible corresponding to the 15 possible 4-bit binary input words. The 16th level is not used since U15-A converts the all ones condition (interrupt) to a mid scale word (1000) (interrupts only occur in a field of midscale data). The resultant analog signal passes through a smoothing filter network (C16, C17, C18 and L1) and into the audio amplifier U12. U12 is a programable amplifier which may be operated at any one of 4 output levels. A binary word at pins 16 and 15 (D0 and D1) selects the channel to be used. The volume level of each channel is determined by appropriate resistors in the feedback network (R56, 57, 58, 62, 65, 68).

A truth table for the audio level words is given below:

D0	D1	Function
0	0	Hard "GLIDESLOPE" warning normal "WHOOP WHOOP PULL UP" or "TERRAIN" warning.
1	0	Reduced Program Level
0	1	Soft "GLIDESLOPE" warning
1	1	Not used

(11) When U16, U17 and U18 have completely addressed the ROM selected by the chip select logic, the output at U16D goes from a HIGH level to a LOW level, clocking U5.

(a) If the warning is not complete - i.e. between "WHOOP WHOOP" and "PULL UP" - the chip select logic is switched to select the appropriate ROM, and U6A (J-Input) is enabled to allow detection of the next end of message. (End of PULL-UP Segment.)

(b) If the warning is complete ("PULL UP" has just been generated), U16D will cause U6A-Q to switch LOW, disabling U8 and inhibiting the warning circuitry, and U5Q2 will be set HIGH, re-enabling the AW0 #1 Input. If the warning is to be continued, the complete cycle begins again.

(12) When a Mode 5 ("GLIDESLOPE") warning is to be given, the normally HIGH logic level of A4P1 switches LOW momentarily and then returns to a HIGH level. This cycles U6B and switches its output at Q from a normally LOW level to a HIGH level. This causes U10C to switch LOW putting U6A-CLR LOW, U6A-Q LOW and U6A-$\overline{Q}$ HIGH. The warning circuitry is thus enabled, U6B is cleared and the "GLIDESLOPE" request input A4P1 is held low inhibiting any further requests.

In its quiescent condition, the U11 chip select logic is set addressed to the "GLIDESLOPE" ROM, therefore, no switching of those gates is necessary to generate a Mode 5 warning.

The "GLIDESLOPE" ROM is addressed by U16, U17 and U18, with the final ROM address clocking U6A and setting it to disable the warning circuitry, the clear is removed from U6B and the

"GLIDESLOPE" request input A4P1 is enabled for the next request. The repetition rate of the "GLIDESLOPE" warning varies with the degree of deviation from the glideslope. Greater deviation produces a faster repetition rate. The volume at which the "GLIDESLOPE" warning is given also is determined by the degree of deviation.

Two volume levels are possible, corresponding to the HARD and SOFT Mode 5 warnings. When a Mode 5 HARD warning is called for, normally LOW logic level on P1-18 is switched HIGH which in turn places a LOW logic level on the U12-D1 terminal. D 0 is already LOW and the LOW-LOW word switches the audio output to an appropriate level for a HARD "GLIDESLOPE" warning.

(13) The reduced audio program is an option of the Voice Warning assembly. If P1-15 is grounded, the Shift Register U2 will switch the output of the audio amplifier to a reduced level after a preselected number of consecutive repetitions of a warning. The number of consecutive warnings occurring before a reduction of the audio level is determined by the output connection at U2. One to five repetitions correspond to connections to QA(15), QB(14), QC(13), QD(11), and QE(10) respectively. This connection is normally set to U2-QC (pin 13) for 3 warning cycles before reduction. U1E serves as a buffer between the reduced program input and the shift register.

(14) Q3 and Q4 serve to reduce the audio output of the "WHOOP WHOOP" portion of the AW0 No. 1 warning. During the "WHOOP WHOOP" segment of the warning, Q3 and Q4 are turned ON by a HIGH logic level output from U5-Q1 through U3C, and U9E. This puts one end of R63 to ground and serves as a voltage divider with R59 to reduce the voltage level of the input to amplifier U12, which reduces the output volume level.

(15) Q5 serves as a clamp, keeping the glideslope warning immune to transients.

(16) On some assemblies, two 8K ROMS are used for "PULL UP" in lieu of one 16K ROM. In this case, the circuit operation remains the same with the two functioning as one.

E. Synchro Demodulator Assembly (A4A2) (Ref. Fig. 117). (Altitude synchro to rate converter).

(1) Following the detailed circuit description below, the theory of operation is explained starting with (10).

(2) Input buffer amplifiers U1A and U2D provide the necessary scale factors to produce the cos θ and sin θ functions respectively. An additional gain reduction by a factor of 2 is included in both circuits to obtain the desired signal level. R1, R2, R3, R5 and R6 determine the stage gain of U1A. The stage gain of U2D is set by R16, R17, R18 and R19.

(3) Q1B is equivalent to S1A on the block diagram (Fig. 19). If Q1B is off and FB2 is nil then the +6.2v reference set by VR1 will cause the output of integrator U1C to move negative. In order for Q1B to be off, Ø A will be -14.5v and pin 11 of the comparator (U3C) will be at +0.7v. When cos θ swings negative U3C will flip positive, leaving pin 11 at a +0.7v potential. Q1B will pass the cos θ signal and the output of integrator U1C will move positive at a rate determined by R9, C1 and the magnitude of cos θ, keeping the summing junction at pin 9 equal to 0v. When the integrator output becomes as positive as the negative value of the cos θ signal and raises pin 10 of the comparator above pin 11, Ø A will become negative and Q1B will shut off. The output of U1C now moves negative at a rate determined by R4, C1 and $+V_R$. When the signal cos Ø swings negative again, overcoming the remaining positive signal from the integrator at the input of comparator U3C, Ø A becomes positive and the cycle begins again. Refer to figure 20 for timing diagrams. Thus, switches Q1B and Q1A are turned on for a length of time "W" during the negative portion of each cycle. If the magnitude of the input should increase, the resulting increased rate of the integrator will turn off Q1B sooner and shorten "W" accordingly. Q2A, U2B and U3D operate in a similar manner with the exception that the input signal is sin θ and V_R is negative. The timing diagram will be inverted except for Ø B which remains positive.

(4) Since Ø A controls both Q1B and Q1A, A1A is on during time "W" The resulting signal is amplified and filtered by U1B. Gain is set by R85, R55 and R56 and C8 filters out the ripple. The resulting dc output signal ($A = V_R \tan \theta$) drives two circuits.

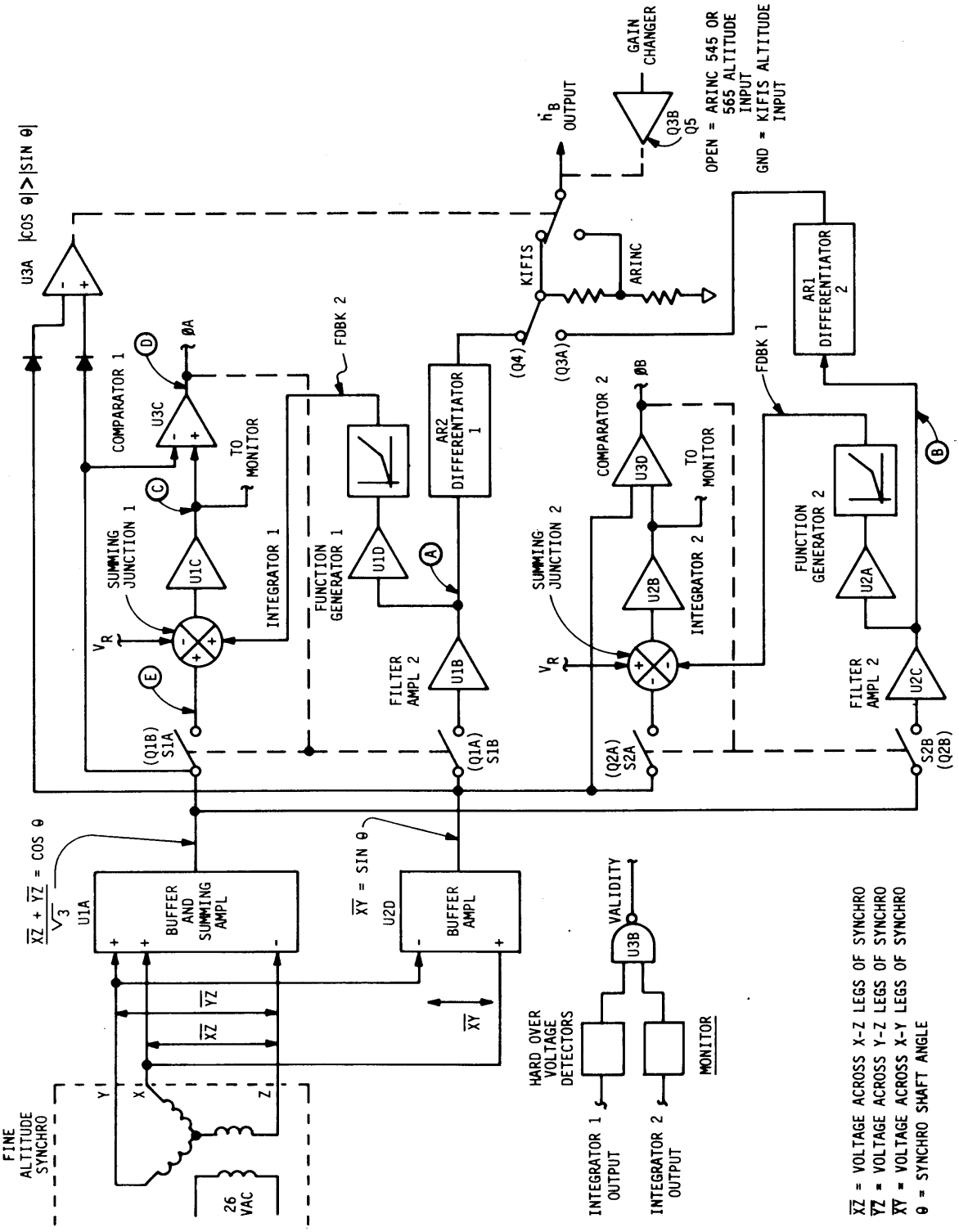

Synchro Demod Block Diagram
Figure 19

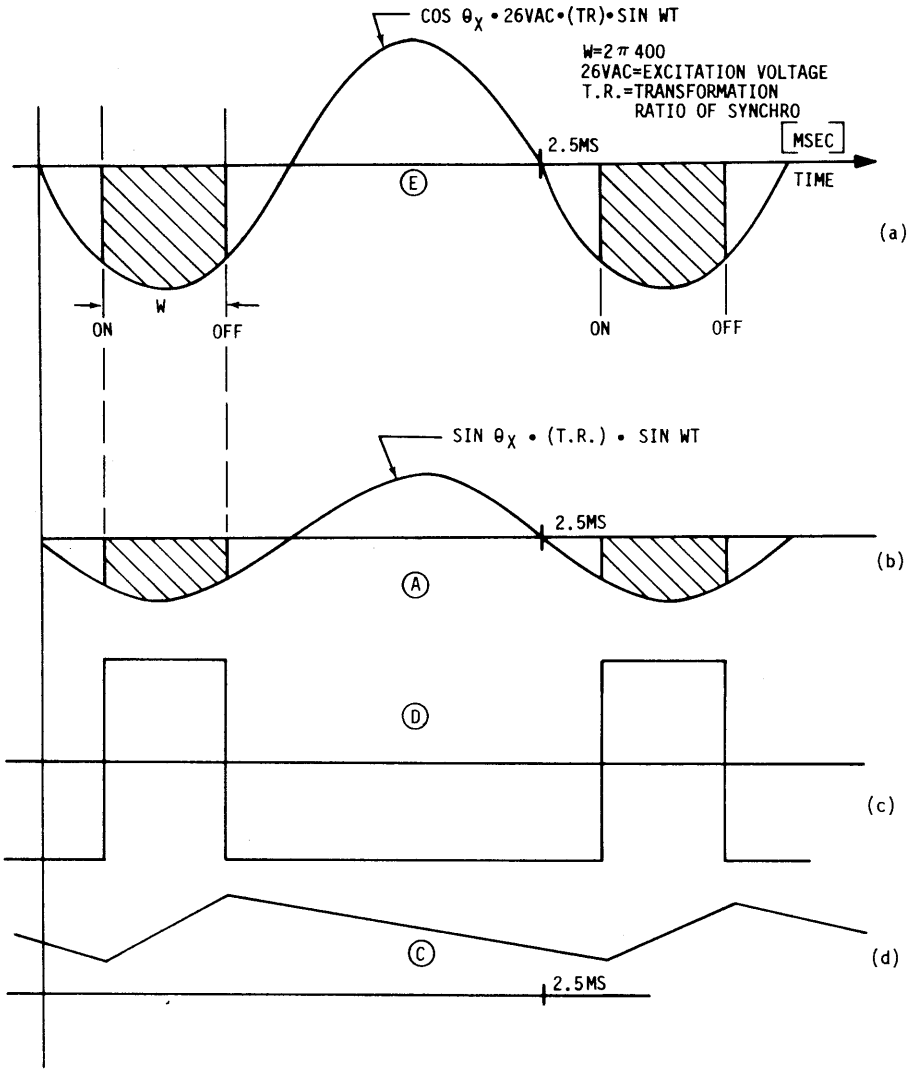

Timing Diagrams
Figure 20

(5) The output of function generator U1D will be 0 for a small input signal and FB2 will be 0. As the tan θ signal becomes greater, the resistance of CR11 or CR12 will drop yielding a larger gain at the output of U1D for a larger input signal. This negative output is fed back to integrator U1C through R63 and, if of sufficient magnitude, through R61 and CR13. With a larger negative signal at FB2, the output of U1C will not decrease at as fast a rate when Q1B is off thus turn on will be delayed. When Q1B turns on, the output of the integrator will increase faster,

with a signal at FB2 making Q1B turn off sooner. Thus, Fig. 21) as the tan θ signal grows larger, becoming nonlinear, FB2 forces the switch on time "W' to shorten which reduces the output of U1B just enough to compensate for the nonlinearity of tan θ. Q2B, U2C and U2A operate in a similar manner.

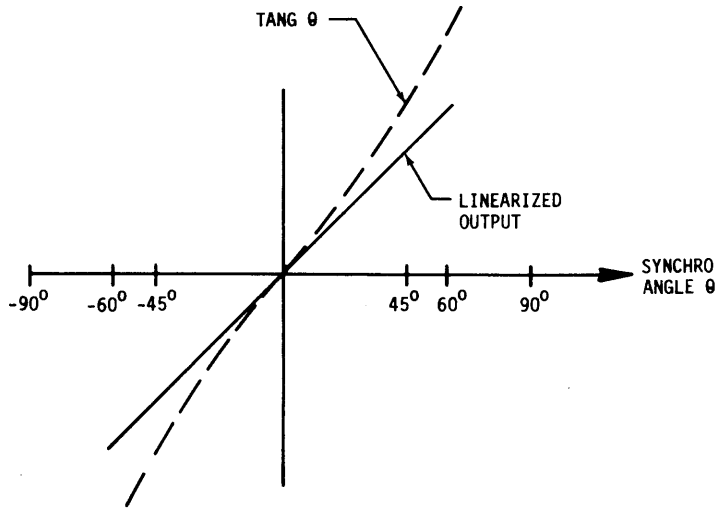

Tangent Function
Figure 21

(6) The altitude output signal of U1B is converted to an altitude rate signal by differentiator AR2. Differentiator gain is determined by C10 and R70. R69 and C12 serve to stabilize the differentiator and reduce it's high frequency gain. If the output of AR2 exceeds ± 11v, CR6 or CR7 will conduct, clamping the output at that level. AR1 functions in a similar manner.

(7) Sin θ and cos θ are rectified by CR4 and CR5 respectively. If $|\cos\theta| > |\sin\theta|$ the output of U3A will be positive. Q4 will be off and Q3A will be on, selecting it as the good output. If sin θ is greater, Q4 will be on and Q3A off.

(8) If "GRD KIFIS" is not grounded, Q5 will be off and Q3B will be on, shorting R79 to ground and scaling the output for a synchro output of 5000 feet per revolution.

(9) Validity is monitored by U3B. If the proper input is present and one of the integrators is operating in a range where U1B or U2C is linear, then the output of U3B will be positive and CR3 will not conduct. If the above is not true then both integrators will be "hard over" or -0.5v for U1C and +0.5v for U2B and the output of U3B will be negative. CR3 will conduct, making "demod validity" a 0.

(10) Description of Operation

A block diagram of the converter is shown in Figure 19. The converter consists of two identical computing loops. Each loop provides a linear altitude output over a range of 140 degrees of synchro shaft angle. The output is periodic, repeating itself every 180 degrees of shaft angle. (See Figure 22 (c).)

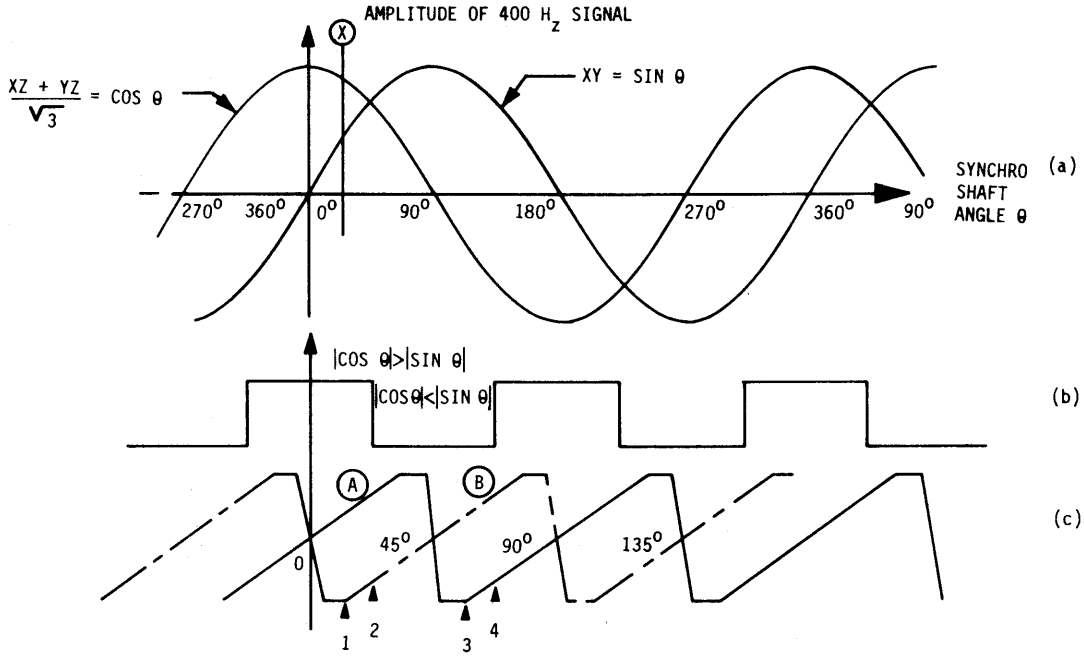

Synchro Demod Waveforms
Figure 22

The three wire synchro signal is first buffered and converted to a resolver type output. This output consists of two 400 Hz signals, one with an amplitude proportional to the cosine of

the synchro shaft angle, and the second signal proportional to the sine of the synchro shaft angle. The amplitude variations of these two signals are shown in Figure 22 (a) as a function of synchro shaft angle.

The cosine signal is fed through a solid-state switch (S1A) to the summing junction (S.J.1) of integrator (1) as shown in Figure 19. The input to the integrator is the difference between a reference voltage (V_R) and the cosine signal. The integrator output (C) is connected to comparator (1). The comparator compares the integrator output with the 400 Hz cosine signal. The output of the comparator (D) controls switches S1A and S1B.

The integrator adjusts its output level to the comparator to maintain the average voltage of summing junction (S.J.1) at zero. A timing diagram of the circuit is shown in Figure 20 for a synchro angle of θ_x as defined in Figure 22 (a).

Switches S1A and S1B chop a segment (W) out of the cosine 400 Hz signal in Figure 20(a). The width (W) is controlled to maintain the average of S.J.1 at zero. The mathematical definition of this circuit is shown in equation (1) below.

$$W \cdot \cos\theta \cdot 26\ \text{VAC} \cdot T_R - V_R = 0$$

$$(1)\quad W = \frac{V_R}{\cos\theta \cdot 26\ \text{VAC} \cdot T_R}$$

The sine signal is fed through solid-state switch (S1B) to the filter amplifier. The output of this amplifier (A) is described mathematically below and shown in Figure 20(b).

$$A = W \cdot \sin\theta \cdot 26\ \text{VAC} \cdot T_R$$

Substituting (W) from equation 1 into the equation for A above results in equation (2) below.

$$(2)\quad A = \frac{\sin\theta \cdot 26\ \text{VAC} \cdot T_R}{\cos\theta \cdot 26\ \text{VAC} \cdot T_R} \cdot V_R = V_R \tan\theta$$

From equation (2) it can be observed that the output (A) is proportional to the tangent of the synchro shaft angle and the signal is independent of excitation voltage and synchro trans-

formation ratio (T_R). The tangent function is linear over a very limited range (see Figure 21 tan θ). To linearize the tangent function over a larger range, the output signal (A) is fed back to integrator (1) through a function generator via S.J.1.

The feedback voltage (F.B.) applied to S.J. 1 is made proportional to the square of the filter output (A). The result of this feedback loop is to linearize the filter output over a range of ± 60 degrees of synchro angle θ. See Figure 21, linearized output.

The squaring function is approximated by a simple diode function generator.

Output (B) in Figure 19 is computed by an identical circuit as described above, except that the sine θ signal is applied to the integrator and the cosine θ signal is applied to the filter amplifier.

Outputs (A) and (B) are piecewise linear segments overlapping each other as shown in Figure 22(c). Output (A) is differentiated by differentiator 1 and output (B) by differentiator 2. Solid-state switch (S3) selects the proper differentiator altitude signal to apply to the output.

As the synchro shaft angle rotates from zero degrees toward 180 degrees, output (A) is determined to be the proper linear altitude element and differentiator (1) is switched to the output by (S3). When the synchro angle reaches point (1), at approximately 25° degrees of synchro angle, output (B) becomes linear. See Figure 22 (c). Differentiator (2) starts tracking differentiator (1) at point (1). When point (2) is reached, the output is switched, by (S3), to differentiator (2). Both differentiator outputs are equal at this time and the output voltage is unaffected by the transfer.

As the synchro angle increases to point (3), output (A) again is linear and starts tracking output (B). Differentiator (1) is tracking differentiator (2) at this time. At point (4) the altitude rate output is again switched back to differentiator (1) by S3. This process is continually repeated as synchro is rotated.

Switch S3 is controlled by a comparator which compares the magnitudes of the cosine and sine signals. Its output is shown in Figure 22 (b).

The described implementation prevents discontinuities in the altitude rate output which occurs every 360 degrees in a conventional synchro-to-analog converter with a single differentiator. Another advantage of the described system is that the gain of the differentiator stages can be very low because the synchro output is divided into 4 segments of ± 45 degrees with a large scale factor for each segment. This feature makes the rate output practically insensitive to noise.

(11) Failure Monitoring

In normal operation, with output (A) in the linear portion of operation, the average integrator output is near zero volts. See Figure 20 (d). As soon as output (A) becomes non-linear, the integrator control loop loses regulation and the integrator becomes "hard over". The same thing happens if a circuit failure occurs, the synchro input signal is lost, the excitation voltage is lost, or an interconnecting wire is opened.

The "hard over" condition of the two integrators can be utilized as an effective failure monitor. The outputs of the integrators are converted into logic signals and processed. At least one integrator at any given time must be in regulation for a valid condition. This signal plus the validity signal from the altitude source provide a very effective monitor scheme for the altitude rate signal.

F. Monitor Logic Assembly (A5) (Ref Fig. 118)

(1) The monitor logic assembly consists of the following functional circuits:

(a) Lamp test U3A, U1D

(b) Lamp drivers U1A, U1B, U1C, U2A, U2B, U2D

(c) Radio altitude validity monitors Q2, U3B

(d) Ball drivers U6B, U5C, U5D, U6A, U5B, Q3

(e) Power monitor Q1

(f) Ball reset logic U3C, U6C, Q4

(g) Test logic U3D, U4A-D, U2C, U5A

(2) Voltage reference 1 is fixed at +5.1v by R80 and VR4. When the front panel push button (self test) is depressed, the output of U3A swings positive. Voltage reference 2, normally clamped at -0.5v by VR2, becomes +7.5v. The positive pulse through C11 flips the output of U1D to ground until R43 charges C11, bringing the negative input of U1D less positive than the reference voltage applied to the positive input by R50 and R51. Thus, $\overline{\text{lamp test}}$ becomes 0v for about 0.7 seconds and then returns to its normal state of +15v.

(3) Lamp drivers U2A, U1B, and U1A function similarly to U2B. V REF 2 normally is -0.5v so that the output is at 0v even if a 0 at the input indicates a fault. When the lamp test circuit is activated, V REF 2 = + 7.5v. The momentary 0v signal through CR1 makes the output positive, turning the lamp on. If a fault (0) is present on the input line, the lamp will remain on until the test button is released, making V REF 2 = 0.5v again and the driver output 0v.

Lamp driver U2D performs the same function somewhat differently. R55 and R56 establish the negative input at +5v. Thus, both V REF 2 and $\overline{H_R \text{ VALID}}$ must be high before the positive input is greater than +5v, making the output positive and turning on the lamp. $\overline{\text{Lamp test}}$ has access through CR16.

The negative input of U1C is referenced at 5.56v by R9 and R10. Thus, both V REF 2 and AWO #1 must be high, similar to U2D above, for a positive output (AWO #1 high = about +8v).

(4) "Radio altitude validity +28v" is monitored by Q2. If the +28v signal fails, C2 will discharge, turning Q2 off. CR11 and CR15 conduct, making "Master Inhibit Logic" and $\overline{H_R \text{ VALID}}$ a logic 1. A high output from validity monitor U3B will also do this through CR7 and CR8. R12, R13 and R15 establish a small positive bias on the positive input. If the raw +radio altitude signal is not at least somewhat positive as it should always be, the bias will make the output of U3B positive.

(5) The comparators used for the ball drivers have an uncommitted collecter output and thus need a source of pull up current to produce a positive output. R81-R85 provide this current through Q3 when the power monitor is low. If PWR MON is high, Q3 will not conduct, disabling the ball drivers. V REF 1 establishes the positive input of U6B at +5.1v. If the output of U5A is 0, a low at $\overline{\text{TAKE OFF}}$ will make the negative input 0v and the output of ball driver U6B will become positive. A high state at either

TAKE OFF, the output of U5A, or both will make the negative input of U6A greater than V REF 1. Thus, a high state at U5A disables the ball drivers. U5C, U5D and U6A function similarly.

Ball driver U5B has its negative input referenced at +2.5v by R70 and R78. If "G/S volume" is high, the output of U5B will be high. If either G/S volume, cockpit test (through CR22), or both is low, the positive input will be lower than +2.5v and the output will be 0v.

(6) During normal power conditions +24v will cause VR3 to conduct, turning Q1 on, making "PWR MON" normally low. If the +24v supply falls below +15v, VR3 ceases conduction, Q1 turns off and CR10 conducts, making "Master Inhibit Logic" = 1.

(7) Ball reset driver U3C and U6C functions similar to (2) above. When <50 feet becomes 0, C12 and C17 discharge through R92. After approximately two seconds U3C flips high and the output of U6C becomes positive for 0.2 seconds, then returns to 0V. If RADIO ALTITUDE VALIDITY is low, the resulting positive voltage at the collector of Q2 will hold C12 and C17 charged via CR25.

Q4 keeps power turn on transients from resetting the balls by remaining on until R87 charges C14, turning Q4 off.

(8) R62 and R63 maintain the negative input of U3D at +7.5v. This generally keeps the output (ST A) at -15v. However, when "grd test" becomes a logic 1 it causes ST A to flip to +15v.

U2C and U4A control the AWO #1 signal line during ground test. If "GND TEST" is a logic 0, the output of U4A is high and AWO #1 is not affected. However, when GND TEST is a 1, the output of U4A will be low as long as the output of U2C is high. CR17 will conduct, holding AWO #1 low. The negative input of U2C is held at +4.5v by R57 and R93. Thus, the output will be high as long as the positive input is greater than +4.5v. This input signal is supplied through R20, R22, R24, R26 and R28. When all of the four warning inputs are high, the signal will be +15v. As each of the warning inputs becomes low during ground test, the resulting input signal will be reduced by 3v. When all four warning inputs are low, the resulting signal will be reduced to +3v and the output of U2C will become 0v. U4A will become a logic 1, releasing the AWO #1 signal line.

Test logic circuits U4D, U4C, U4B and U5A keep the information stored in the ball annunciators from being lost during cockpit test. A 0v output from U5A is required for the ball drivers to be enabled (Ref. (5) above). Since the positive input of U5A is held at +5.1v by V REF 1, the output of U4C must be high for

this to occur. This will occur if either the front panel test button has been pressed or if the output of U4D is 0. U4D will be 0 only when both AWO #1 = 1 (indicates a warning has occurred) and cockpit test is 1. A 0 at cockpit test also disables the glideslope ball driver U5B through CR22. The output of U4B (cockpit test) will be 0 only if both "gnd test" is true and the front panel push button is not depressed.

G. Glideslope Assembly (A6) (Ref. Figure 119)

(1) The A6 Glideslope assembly consists of the following functional circuits:

(a) Glideslope signal amplifiers AR1 and U1A

(b) Lowpass filter U1B

(c) Highpass filter U2B

(d) Negative absolute value circuit Q2 and U2A

(e) Hard and soft glideslope and 300 ft. warning comparators U7C, U7A and U7B.

(f) Glideslope enable logic

(g) Glideslope volume control logic

(h) Glideslope Voice repetition rate control U5C, U5D, Q8, Q9, Q10 and Q11

(i) Test logic Q1, U3B, Q12, U3D, U5A, Q6, Q7, U7D

(2) Raw glideslope deviation from the glideslope receiver enters either into AR1 or U1A, depending on the type of glideslope receiver in use. AR1 is connected to 75mv/dot receiver and U1A is used for a 1 volt/dot receiver. AR1 provides a gain of 15; U1A provides a gain of 1.13. Source integrity is accomplished by R6, R7, R11 and R13. If the source resistance is not low, the bias will produce a large negative output at E2.

(3) From the signal amplifiers, the glideslope signal passes to lowpass filter U1B which rolls off to -3db at 2.5 Hz. The lowpas filter passes the signal into two branches: a high pass filter U6B, and to the glideslope comparators, U7A and U7C.

(4) The highpass filter U2B displays a -3db rolloff at 0.25 Hz. From the highpass filter, the signal enters the negative ab-

solute value circuit. If the output of U2B is positive, U2A inverts the signal with a gain of one through R25 and R27. This holds Q2 off so that the U2A negative output appears at E3 and therefore across R67 and C10. If the output of U2B is negative, U2A will saturate positive but there will be no feedback because CR2 will be reverse biased. Q2 will be turned on and pass the negative signal from U2B on to E3 and to R67 and C10. In either case R67 receives a unity gain negative signal equal in value to the output of U2B; U2A and Q2 are therefore termed a negative absolute value circuit.

(5) The high and low pass filters act together to pass signals OTHER THAN those encountered in a normal front glideslope approach. The glideslope signal is present throughout the airport area but is unstable, therefore invalid anywhere but on the prescribed runway approach. In other areas near the airport, the glideslope signal is noisy and constantly changing from full-scale high to low. The bandpass characteristics of the filter have been chosen to pass this invalid glideslope signal, using it to inhibit the glideslope warning mode.

(6) Capacitor C10 filters the signal from the negative absolute value circuit. If the output level exceeds the -333 mv reference produced by R71, R72 and R73, U6A will trip positive. This charges C24, which causes U6C to trip negative. This forward biases CR7 and inhibits the glideslope warning circuit. When the beam becomes useable, U6A will trip negative, C24 will discharge through R74 and trip U6C positive when the voltage across R74 drops below the reference level of +3.1 vdc set by R75, R77, and R78. Time for C24 to discharge is 11 seconds. The filter circuit requires between 3 and 5 seconds to stabilize, making the overall delay approximately 15 seconds.

(7) The output of the lowpass filter also passes to the comparator circuitry U7A and U7C. The glideslope deviation signal is compared to predetermined voltage references at U7A (+) and at U7C (+). U7A is set to trigger a soft glideslope warning when its threshold is exceeded. U7C will enable a hard glideslope warning when its threshold is exceeded. In both cases, the threshold is determined by the resistor network at the non-inverting terminal, and modified by the output of U6B, which is determined by the linear radio altitude signal H_R LINEAR. The warning envelopes for the two warnings are presented in figure 11. U7B is a comparator with a bias via R79 equivalent to +1.38v, corresponding to a radio altitude of 345 ft. When H_R LINEAR is less negative than -1.38v, U7B will trip negative, switching Q13 off. If the output of U7C is positive (hard glideslope warning),

Q13 provides high logic output to gate U4C if the aircraft is also under 300 ft.

(8) The glideslope assembly logic is designed to disable the warning circuitry under certain conditions. A LOW logic level at the cathode of CR1, CR2, CR4, CR10, CR7, CR11, CR8 or CR6 (corresponding to the inputs from various validities and inhibits) will disable the warning circuitry. U2C, U4B, U3A, Q4, Q5, U2-B and K1 provide circuitry which enables the pilot to inhibit the glideslope warning mode under certain conditions, for instance, if he decides to land closer to the end of the runway than would be normal in an ILS approach. If the aircraft is under 1000 ft. and a hard "GLIDESLOPE" warning is not in progress, he may inhibit this mode by depressing the BELOW G/S warning lamp. This causes the output of U2C to switch from a logic ZERO to a ONE. With ONEs on the other inputs to gate U4B, U4B switches to ZERO, U3A switches to ONE, turning Q5 ON and SETTING magnetic latch K. A Mode 5 warning is now cancelled or inhibited.

If the pilot does not depress the BELOW G/S button, K1 will remain in the reset or armed position regardless of the other inputs. If the latch is in the reset position and a hard glideslope warning is initiated, the latch may not be set (inhibited) by the cockpit pushbutton. Subsequent ascent through 1000 ft. (resetting K1 through U2-B and Q4) will allow the pilot to once again inhibit the glideslope warning when he is again under 1000 ft. and a hard glideslope warning is not in progress. The magnetic latch prevents the inhibit/enable circuit from "forgetting" its status in the event of a momentary power failure.

On some models, Mode 5 is cancellable also during a hard "GLIDE-SLOPE" warning. This is accomplished by removing the connection between the output of U4C and U4B.

(9) U4C provides the glideslope volume control logic. A low logic output turns Q1 OFF, thus triggering a hard glideslope warning. Any LOW logic input to U4C will cause its output to switch HIGH, switching Q1 ON and disabling the hard warning but NOT the soft warning.

(10) Q8 through Q11, U5C and U5D generate the pulse train which controls the glideslope warning repetition rate. U4A provides the logic control for the glideslope voice repetition rate circuit and the glideslope advisory lamp driver via the time delay through Q4, Q5 and Q6. The glideslope warning is initiated when U4A is switched to low. The low logic level of U4A allows discharge of C19 which turns Q4 off and Q6 off. The low level at Q6 turns Q10 off, Q3 off. When Q3 switches off, Q2 is switched on, illuminating the glideslope advisory lamp. When Q10 switches off, Q8, Q9 and ultimately Q11 are switched on briefly.

When Q11 switches ON, C23 discharges to 0 volts, preparing it to function in the warning sequence. After switching the pulse generation circuit to its initialized state, Q8 is turned OFF by C19 discharging through R28. With no charge on C23, the glideslope deviation signal is applied to the (-) input of U5D, causing it to generate a negative going ramp. When the voltage of this ramp at the (-) input to U5C exceeds the threshold set on the (+) input by the radio altimeter signal and the -15v supply, U5C switches positive. This turns Q8, Q9 and Q11 on again briefly, which enables C23 to return to its initialized state once more, and begin the cycle again if the deviation signal is still present. This sequence produces a pulse train at the collector of Q8. The repetition rate of the pulse train is dependent on the slope of the ramp generated by U5D. A greater deviation signal produces a steeper ramp and a faster repetition rate.

When ST_A is high, bias via R30 and CR3 holds Q11 on and keeps the circuit from repeating. Q3 serves as transient protection.

(11) The glideslope fault amplifier, U6D is normally saturated positive when the assembly is not under test. This provides an enable signal at CR6 and also contributes to the bias on U5A(+). U5A generates a test signal when the aircraft is under 1000 ft. and TEST is true. In the test mode, the output of U5A is +15v, which is applied to Q1, turning it off, and to U1A(+) which results in -4v appearing at that terminal. This results in a +8v output from U1A and +8v at the U1B output. The resultant +8v at the (+) inputs to U7A and U7C triggers these amplifiers, which initiates a glideslope warning.

(12) U3B and Q12 are also elements of the inflight test circuitry. When the aircraft is over 1000 ft. and the test button is depressed, +15v is applied to U7A(+), causing a soft glideslope warning.

(13) Q6 and Q7 permit the inhibit functions to be disconnected from the warning logic during a test of the system. If a test is not in progress, Q6 and Q7 are ON, and the warning circuit may be inhibited normally. If a test is initiated, the base of Q7 is switched to a HIGH logic level, cutting it OFF. This in turn allows -15v to be applied to the gate of Q6, cutting it OFF and breaking the connection between the inhibit functions and the warning circuitry. A HIGH logic level (+15v) thru R15 is now applied to U4A pin 5, permitting a warning output if pins 3 and 4 are also HIGH.

H. Self Test Assembly A7 (Ref. Fig. 120)

The self test assembly contains the validity lamps (both -012 and -013 assemblies) and the mode annunciators (-001 assembly only) for the GPWC. It receives its inputs from the Monitor Logic Board (A5), and also is connected to the automatic test unit.

I. Heatsink Assembly A8 (Ref. P/O Fig. 112)

The heatsink assembly provides the mounting base for power transistors Q1 and Q2 described in paragraph 3.A.(2).

J. Code Identifier Assembly A9 (Ref. Fig. 121)

The code identifier assembly is a resistor network which provides proper interface between the GPWC and the automatic test equipment. (Ref. Fig. 114).

K. External Mode Counter Driver Assembly A10 (Ref. Fig. 122)

The external counter driver assembly is a resistor network which provides proper interface between the GPWC and the optional external mode counter.

L. Self Test

(1) Two modes of self-test are incorporated in the GPWC. Continuous monitoring throughout the system indicates a fault condition and inhibits any false warnings generated.

Dynamic self-test exercises the computational circuits, generating appropriate warning outputs as the system checks out. System status is indicated by fault identification lamps and optional warning mode annunciators.

(2) On the A1 power supply assembly, the +15v supply is continuously monitored by Q1 thru Q4. A high or low voltage condition will produce a logic 1 on the MASTER INHIBIT logic line (Ref. A(7)). The -15v supply is similarly monitored. Complete failure of the -15v supply is likewise monitored by Q1.

(3) The validity of the baro rate signal is monitored by four input circuits on the A3 audio assembly. Verified are the validity signal from the source (U8A) (Ref. C.(4)), the reference input (Q4) and the integrity of the source output and wiring (Q3). A fault in any of the above will produce a logic 0 at BARO INHIBIT, inhibiting Mode 1 (sinkrate) and Mode 3 (takeoff) warnings. The GPWS failure light is also illuminated.

(4) The radio altitude is verified on the A5 monitor logic assembly by the validity signal (Q2) (Ref. F(4)) and the source integrity monitor (U3B). A fault will produce a logic 1 on the MASTER INHIBIT logic line, inhibiting all warnings.

(5) Also included on the A5 assembly is the +24v power monitor (Q1) (Ref.F.(6)). A low power condition will produce a logic 1 on the MASTER INHIBIT logic line and also inhibit the ball drivers via Q3 (Ref. F. (5)).

(6) On the A6 glideslope assembly, two validity inputs and two enable-inhibit signals are monitored by U1A, U1B, U5B, U2A (Ref. G(8)). Invalid will produce a logic 0 at G/S VOICE thus inhibiting the glideslope warning except during test. Input buffers AR1 and U1A also serve as source integrity monitors (Ref.G(2)). Any fault will produce a large negative offset which U6D translates to a logic 0 at G/S FAULT. This will inhibit ST A during test.

(7) If the A4A2 synchro demod option is installed, the validity output monitors for a number of possible failures (Ref. E. (9), (11).

(8) $\overline{\text{G/S FAULT}}$ and $\overline{\text{BARO INHIBIT}}$ and $\overline{\text{INHIBIT}}$ are continuously monitored by U8D (Ref.3.A.(8))on the A1 power supply assembly. If a test is not in progress, a failure will release validity relay K2 and the GPWC fault lamp will come on. This will also occur if +24vdc should fail.

(9) A dynamic test may be initiated from either the cockpit or the GPWC front panel while on the ground or in the air. The internal test sequence for a ground test from the front panel is described below. Differences in the sequence are noted for a cockpit test while air test is covered under (18) below.

(10) When the system is working properly, the following conditions will be met during a ground self test:

BARO VALIDITY =1	<50 ft = 1	GU=0	$\overline{\text{INHIBIT}}$ = 1
$\overline{\text{BARO INHIBIT}}$ = 1	<700 ft = 1	FU=1	K1 is set (T.O. = 1)
	<1000 ft = 1		

If the self test button is pushed, a number of logic states will change immediately. On the A1 power supply board (Ref. Fig. 112), $\overline{\text{GND TEST}}$ = 0 (U3A) making GND TEST = 1 (U2B) and TEST 2 = 1 (U2C) which makes TEST = 0 (Q21) and $\overline{\text{TEST 2}}$ = 0 (U6C). >50 ft. + GND $\overline{\text{TEST}}$ = 1 (U3C) making G/S ENABLE = 1. Since FLAPS UP LOGIC = 1

and GEAR DOWN LOGIC = 1, FD+<50 ft = 0 (U3D) and GU+FU) · >50 ft = 1 (U4D) . This sets $\overline{\text{INTEGRATE}}$ = 0 (U5A). $\overline{\text{GND TEST}}$ = 0 inhibits the event recorder (Ref. A(5)). When TEST 2 = 1, the output of U2A becomes a 0 which releases the AWO #1 line after a one second delay (Q13, U8B) (Ref. A. (5)).

(11) On the A5 monitor logic assembly the lamp test circuit (Ref. F(2)) will be activated. Thus, the six status lamps will all come on briefly and then go out. If a fault exists, the associated indicator will remain on until the button is released. This will not occur during a cockpit test since ($\overline{\text{FPTB}}$ will remain a 1 (CR19). GRD TEST = 1 from the A1 power supply assembly makes ST A = 1 and also sets U4A = 0 until all four warnings are detected by U2C (Ref. F. (8)). This holds the AWO #1 line low. Logic circuits U4B, C, D and U5A disable the ball drivers if the test originates from the cockpit. If the test originated from the front panel, the ball drivers will be enabled and the mode annunciators will indicate positive as the respective warning signals occur.

(12) >50 ft + GND TEST = 1 from the A1 power supply assembly enables the baro rate circuits on the A3 audio assembly via Q15 (Ref.C.(3)) ST A = 1 from the A5 monitor logic assembly injects a signal into U3A which produces a 3000 fpm sink rate signal at BARO RATE #1 (Ref.C.(2)) ST A = 1 also forces GEAR DOWN LATCH to a logic 0.

(13) On the A6 glideslope assembly, $\overline{\text{TEST}}$ = 0 from the A1 power supply assembly produces TEST = 1 (U7D). TEST = 1 turns Q6 off leaving a logic 1 at the inputs of U4A and U4C. TEST = 1 also makes the glideslope ST A signal = 1 (U5A) which produces the equivalent of a large fly up deviation signal at the output of U1A. This signal passes through low pass filter U1B and comparator U7B to produce a 1 at G/S SOFT. G/S SOFT = 1 sets $\overline{\text{G/S VOICE}}$ = 0 and triggers the glideslope voice rep. rate circuit (ref. G(10)) which immediately instructs the A4 voice warning assembly to generate an aural glideslope voice warning. $\overline{\text{G/S VOICE}}$ = 0 also generates the visual warning through the glideslope advisory lamp driver circuit (Q3, Q2). H_R LINEAR from the A2 comparator assembly will jump to about 600 ft altitude and then ramp down at a constant rate. When it passes below 300 ft. U7A, U7C and Q13 will produce <300 ft · G/S HARD = 1 (ref G (7)) making G/S VOLUME = 1 via U4C and Q1

(14) On the A2 comparator assembly, ST A = 1 from the A5 monitor logic assembly, $\overline{\text{INTEGRATE}}$ = 0 and FD+<50 ft = 0 from the A1 power supply assembly, and GDL = 0 from the A3 audio assembly. Also from the audio assembly, BARO #1 = 3000 fpm sinkrate. ST A = 1 will hold <50 ft = 1 (U5A) for the duration of the test. Since GDL=0, U3A and U3D will immediately set <TC = 1 (Ref. B.(14)(15)). With the rise of ST A, U4B will produce an altitude signal which jumps up to

about 600 ft and then ramps down at a constant rate (Ref.B.(19)). BARO #1 will produce an equal sinkrate at BARO #2 but with a time lag due to filter AR1.

If the takeoff altitude loss mode 3 option is included in the GPWC, the circuit will sense the altitude loss and produce TAKE-OFF LOSS = 1 (Ref. B(18)). Alternately, the takeoff rate mode 3 option will sense the growing sinkrate of BARO #2 vs. altitude and set TAKEOFF LOSS = 1.

The mode 1 (sinkrate) circuits, U2D and U2B (Ref. B.(10)(11)) also detect the growing sinkrate vs altitude and produce SINK RATE = 1.

The radio rate signal derived by AR2 (Ref.B.(5)) drives the output of the trip equation circuit (U2C) (Ref.B.(7)) to its sinkrate limit. This signal is combined in the complementary filter (Ref.B.(12)) and when the filter output is large enough, $\overline{CW}$ = 0 is produced by comparator U3C (Ref.B.(13)).

(15) As the three warning signals generated on the A2 comparator assembly appear, gates U5C, U7A and U7B on the A1 power supply assembly produce $\overline{TAKEOFF}$ = 0, $\overline{TERRAIN}$ = 0 and $\overline{SINK}$ = 0.

(16) When $\overline{TAKEOFF}$ = 0 and $\overline{TERRAIN}$ = 0 and $\overline{SINK}$ = 0 and $\overline{CW}$ = 0, logic U2C and U4A on the A5 monitor logic assembly will release the AWO #1 line. AWO #1 = 1 triggers the A4 voice warning assembly to generate a "whoop whoop pull-up" aural warning.

(17) On the A1 power supply assembly, AWO #1 = 1 generates the visual pull-up warning via Q16, Q17, K1 and optionally the flasher circuit. BINARY WARNING = 0 via Q18.

(18) When the system is functioning properly, the same conditions will be met during an air test as in (10) above except:

<50 = 0 GU = 1

<700 = 0

<1000 = 0 K1 is reset (T.O. = 0)

When the cockpit self test button is pushed, $\overline{AIR\ TEST}$ = 0, FD + <50 ft = 0, and (GU + FU) · >50 ft) = 1. $\overline{AIR\ TEST}$ = 0 inhibits the event recorder.

Since $\overline{\text{GND TEST}}$ = 1, ST A will remain 0. Therefore neither an artificial baro rate or radio altitude will be produced. ST A on the A6 glideslope assembly also will not produce a glideslope deviation. However, U3B and Q12 will inject a signal into U7B and yield G/S SOFT = 1 which will produce visual and aural warnings. G/S HARD will not occur since <300 ft = 0.

The A2 comparator assembly will not produce warning signals but since U4A on the monitor logic assembly does not clamp AWO #1, it will become a logic 1 when after a one second delay it is released by U8B. Both aural and visual warnings are produced.

The system status lamps will not come on nor will the mode annunciators flip positive since $\overline{\text{FPPB}}$ = 1 and COCKPIT TEST = 1 (A5 monitor logic assembly).

TESTING AND TROUBLESHOOTING

1. General

This section presents the procedures for testing, calibration and troubleshooting the GPWC.

Two types of testers are available for testing the GPWC. Tester, Part No. 951-0190-XXX, will test the GPWC top assembly. Tester, Part No. 951-0192-XXX, will test the GPWC top assembly and the individual printed wiring assemblies.

When using tester, Part No. 951-0190-XXX, proceed to para. 2; for the functional test, calibration and troubleshooting. Tester, Part No. 951-0190-001 or -006 test models 070, 071, 072, 079, 081, and 087. Tester, Part No. 951-0190-002 will test model 073 as well as models 070, 071, 072, 079, 081, and 087. The following table of contents will assist in locating the required procedures.

Para	Description	Page
2	Functional, Calibration, and Troubleshooting Test Procedure using tester 951-0190-001/002/006	104
2A	General	104
2B	Test Equipment and Power Requirements	104
2C	Initial Test Setup	104
2D	Code Resistor Verification Test	106
2E	Functional Test Procedure	107
2F	Calibration Procedure	147
2F(1)	Voice Warning Assembly (A4) or (A4A1) Calibration Procedure	147
2F(2)	For model 073 only, Synchro Demodulator Assembly (A4A2) Calibration Procedure	150
2F(3)	Audio Assembly (A3) Calibration Procedure	151
2F(4)	Power Supply Assembly (A1) Calibration Procedure	153
2F(5)	For model 070 only, Voice Warning Assembly (A4R62 and A4R68) and Audio Assembly (A3R43) Resistor Calibration	155
2F(6)	For model 087 only, Turbo-Prop Printed Wiring Assembly (A2A1) Calibration	156
2G	Troubleshooting Procedure	160

When using tester, Part No. 951-0192-XXX, proceed to para. 3, for functional test calibration (for models 070-087) and troubleshooting of various GPWC's. Individual printed wiring assembly tests, calibration and troubleshooting are provided in para. 4 and on. Tester, Part Nos. 951-0192-001 and -004 will test models 070, 071, 072, 079 and 081. Tester, Part No. 951-0192-002 is required for testing model 073, however, it will also test models 070, 071, 072, 079 and 081. Tester, Part Nos. 951-0192-003, -005 and -006 will test models 070, 071, 072, 079, 081 and 087. The following table of contents will assist in locating the required procedures.

Para	Description	Page
3	Functional, Calibration and Troubleshooting Test Procedure using Tester 951-0192-001/002/003/004/005/006.	198.25
3A	General	198.25
3B	Test Equipment and Power Requirements	198.25
3C	Test Setup	198.25
3D	Code Resistor Verification Test	198.30
3E	Tester Verification	198.32
3F	Functional Test	198.32
3G	Calibration Test (model 070, 087 only)	198.72
3H	Troubleshooting Procedure	198.75
4	Power Supply Assembly (A1) Functional Test, Calibration and Troubleshooting	198.189
5	Comparator and Closure Warning (A2) Functional Test and Troubleshooting	198.215
6	Audio Assembly (A3) Functional Test, Calibration and Troubleshooting	198.239
7	Voice Warning Assembly (A4) Functional Test, Calibration and Troubleshooting	198.257
8	Synchro Demodulator Assembly (A4A2) Functional Test, Calibration and Troubleshooting	198.277

Para	Description	Page
9	Monitor Logic Assembly (A5) Functional Test and Troubleshooting	198.291
10	Glideslope Assembly (A6) Functional Test and Troubleshooting	198.305

An ATLAS test program has been prepared for the GPWC, Part Nos. 965-0376-070, -071, -072, -073, -079, -081, and -087 and is available from Sundstrand Data Control by requesting the following Document number(s):

PART NUMBER	DOCUMENT NUMBER
965-0376-071	012-0233-001
965-0376-087	012-0233-002
965-0376-072	012-0233-003
965-0376-079	012-0233-004
965-0376-070	012-0233-005
965-0376-073	012-0233-006
965-0376-081	012-0233-007

2. Functional, Calibration and Troubleshooting Test Procedure using Tester 951-0190-XXX.

A. General

This section presents the procedures for testing, troubleshooting and calibrating the GPWC with Sundstrand Tester Part No. 951-0190-001 or -002 or 006.

B. Test Equipment and Power Requirements

NOTE: Test equipment substitution is permissible provided that the substituted equipment has an accuracy equal to or greater than the specified equipment.

(1) Test Equipment

The test equipment required is listed in Fig. 901.

(2) Power Requirements

Power Requirements are noted in Fig. 101 and listed in Fig. 901.

C. Initial Test Setup

(1) Set the tester controls as follows:

CONTROL	SETTING	CONTROL	SETTING
Synchros Dial	- 0 ± 10°	Applicable only to 951-0190-002 tester requirements where test of synchro demodulator is required.	
RAMP	- OFF		
EIN	- A		
EXC	- OFF		
EXC	- ON (Model 073 only)		
GS ADJ	- 5.0 ± 0.1	MOD 2	- ILS
MODE 1	- ILS	SIGNAL	- NORM
GAIN	- LO	INH 2	- BACK
INH 1	- BACK		

CONTROL	SETTING	CONTROL	SETTING
BARO ADJ	- 5.0 ± 0.1	BARO INPUT	- GND
CM/NORM	- NORM	OUTPUT	- AC-1
FUNCT	- DC		
TEST SIG	- 5.0 ± 0.1	TEST SIGNAL ON/OFF	- OFF
SEL	- A		
VOLUME	- On (minimum)		
RAD ALT	- 0.0 ± 0.1	WARN SEL	- OPEN
RATE	- 0.0 ± 0.1	HOLD	- OFF
RESET	- RESET	RAD INPUT	- FIXED
FLAPS 1	- UP	GSH	- VAL
FLAPS 2	- UP	GS CANC	- OFF
R/A	- VAL	GS INH	- OFF
BARO MON	- ON	GSL	- VAL
GEAR 1	- UP	ACREF	- LO
GEAR 2	- UP	KIFIS	- OFF
CADC	- VAL	MODE 4	- OFF
SELF TEST	- OFF	LOAD	- LOAD
ON/OFF	- OFF	AUDIO	- OFF
INH GND	- OFF	FLAP	- OFF
INH +28	- OFF		
PWR	- OFF		

(2) Connect GPWC to tester as shown in Figure 101.

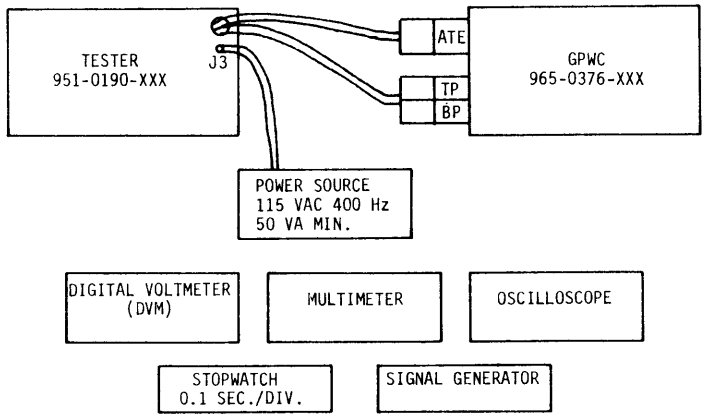

Test Setup
Figure 101

(3) Connect 115 vac 400 Hz (50 VA minimum capacity power source to the tester.

(4) Adjust the 115 vac source for 115 ± 1 vac.

NOTE: In the test procedures that follow, change switches and use test equipment only as specified. Procedural differences between computers are specified by usage of the term model, that is, model 071 will be specified when the procedural step applies only to Part No. 965-0376-071, model 081 for 965-0376-081, etc.

D. Code Resistor Verification Test

(1) Set the DVM to measure ohms. Connect the DVM (-) lead to tester jack ATE 7 (clean ground). Hereafter the tester jacks will be referred to as ATE, TP (TOP PLUG), and/or BP (BOTTOM PLUG) and then the applicable jack number.

(2) Connect the DVM (+) lead to the following jacks and verify the indication.

(a) ATE 101: 9.80K to 10.20K

(b) ATE 102: 9.80K to 10.20K

(c) ATE 103: Model 070: 98 to 102 ohms

Model 071: 147 to 153 ohms

Model 072: 178 to 186 ohms

Model 073: 216 to 226 ohms

Model 079: 667 to 695 ohms

Model 081: 980 ohms to 1.02K

Model 087: 3.84K to 4.00K

(d) ATE 104: 9.80K to 10.20K

(e) ATE 106: 9.80K to 10.20K

(f) Connect the DVM (+) lead to jack ATE 105 and verify the DVM indication as applicable to a specific Mod as noted in Fig. 102.

MOD	MODELS						
	070	071	072	073	079	081	087
0	9.80K TO 10.20K	9.80K TO 10.20K	9.80K TO 10.20K	9.80K TO 10.20K	9.80K TO 10.20K	9.80K TO 10.20K	9.80K TO 10.20K
1	98 TO 102 OHMS	98 TO 102 OHMS	98 TO 102 OHMS	98 TO 102 OHMS	98 TO 102 OHMS	98 TO 102 OHMS	9.80K TO 10.20K
2	147 TO 153 OHMS	147 TO 153 OHMS	147 TO 153 OHMS	147 TO 153 OHMS	147 TO 153 OHMS	147 TO 153 OHMS	147 TO 153 OHMS
3	147 TO 153 OHMS	147 TO 153 OHMS	147 TO 153 OHMS	178 TO 186 OHMS	147 TO 153 OHMS	178 TO 186 OHMS	178 TO 186 OHMS
4	216 TO 226 OHMS	216 TO 226 OHMS	216 TO 226 OHMS	178 TO 186 OHMS	216 TO 226 OHMS	178 TO 186 OHMS	178 TO 186 OHMS
5	268 TO 280 OHMS	268 TO 280 OHMS	268 TO 280 OHMS	268 TO 280 OHMS	268 TO 280 OHMS	268 TO 280 OHMS	
6	268 TO 280 OHMS	268 TO 280 OHMS	268 TO 280 OHMS	268 TO 280 OHMS	268 TO 280 OHMS	325 TO 339 OHMS	
7						325 TO 339 OHMS	
8							
9							

BLANK AREAS WILL BE FILLED IN AS APPLICABLE

Model/Mod/Resistance
Figure 102

E. Functional Test Procedure

NOTE: Due to the length of the procedure, restarting points have been inserted into the procedure at various places. These are following the test steps specified below. The restarting points are written in as NOTES and start at the same indenture level as the test steps.

Test Step (8) (q)

Test Step (14)(g)

Test Step (22)(a)

Test Step (22)(e)

Test Step (28)(i)

NOTE: Models 072, 079 do not have a WARNING MODE RESET switch nor the indicator balls on the GPWC front panel. When performing the tests that follow on these models, ignore only that part of the tests specifying these controls and indicators, unless otherwise specified.

(1) Initial Voltage Conditions

(a) Set the DVM to measure AC and connect (-) lead to BP-4 and (+) lead to BP-3. Set the FUNCT switch to AC.

(b) Set the PWR switch to PWR. The tester 115V light shall come on. Ignore all other lights unless otherwise specified. Adjust the 115 vac power source for 115 $\pm$ 1 vac as indicated on the DVM. Do not exceed 120 vac, input to tester.

(c) Set the FUNCT switch to DC. Connect DVM (-) lead to ATE 7, set the DVM to measure DC, and connect DVM (+) lead to each tester jack listed, and verify indication. The indications shall be within the tolerances listed below.

1. ATE 1: +23.0 to +27.0 vdc
2. ATE 2: +14.92 to +15.08 vdc
3. ATE 3: +4.70 to +5.30 vdc
4. ATE 6: -23.0 to -27.0 vdc
5. ATE 5: -14.92 to -15.08 vdc
6. ATE 4: -11.70 to -12.30 vdc
7. +28 jack: +27.0 to +31.0 vdc
8. +15 jack: +14.85 to +15.15 vdc
9. -15 jack: -14.85 to -15.15 vdc
10. ATE 20: -2 to +18 mvdc
11. ATE 21: 0 $\pm$ 10 mvdc
12. ATE 23: +0.35 $\pm$ 0.02 vdc
13. ATE 29: 0 $\pm$ 95 mvdc
14. ATE 25: -6.225 $\pm$ 0.150 vdc
15. ATE 28: 0 $\pm$ 100 mvdc

(2) Initial Logic Conditions

(a) Connect multimeter (-) lead to ATE 7 and (+) lead to each tester jack listed, and verify indication.

1. ATE 8: +12 vdc minimum
2. ATE 9: +12 vdc minimum
3. ATE 10: +12 vdc minimum
4. ATE 11: +0.5 vdc maximum
5. ATE 12: +12 vdc minimum
6. ATE 13: +12 vdc minimum
7. ATE 16: +1 vdc maximum
8. ATE 14: +12 vdc minimum
9. ATE 31: +12 vdc minimum

10. ATE 17: +1 vdc maximum
11. ATE 18: +1 vdc maximum
12. ATE 36: +12 vdc minimum

(b) Verify that the computer front panel RADIO ALT, GEAR, AIR DATA, FLAP DN, GPWC OK, and G/S VAL lights are off.

(c) Set the FLAPS 1 switch to DN. Connect the DVM (+) lead to ATE 31. The voltage shall be +12 vdc minimum and the GPWS VAL light shall be off.

(d) Set the FLAPS 2 and GEAR 1 switches to DN. Connect the multimeter (+) lead to each jack specified and verify the indications specified below.

1. ATE 31: +1 vdc maximum
2. ATE 32: +12 vdc minimum
3. ATE 15: +1 vdc maximum
4. AURAL light - off
5. 1, 2, 3 lights - off
6. EVENT light - off
7. GPWS VAL light - off
8. G/S light - off
9. For models 072, 079; the computer FLAP DN light shall be off.

(e) Connect the DVM (+) lead to each jack specified and verify the indications specified below:

1. ATE 61: +10.6 to +13.8 vdc
2. ATE 62: +10.6 to +13.8 vdc
3. ATE 63: +10.6 to +13.8 vdc
4. ATE 64: +10.6 to +13.8 vdc
5. ATE 65: +10.6 to +13.8 vdc

(f) Momentarily press the computer front panel WARNING MODE RESET switch. The computer front panel indicators shall be as follows:

1. Ball 1 (HI SINK) - black
2. Ball 2 (TERRAIN) - black

3. Ball 3 (TAKE OFF) - black
4. Ball 4 (GEAR/FLAP) - black
5. Ball 5 (G/S) - black
6. FLAP DN light - off

(3) Radio Altitude Input to 300 Feet

Set the RAD INPUT switch to VAR. Connect the DVM (+) lead to BP-20. Increase the RAD ALT dial until the DVM indicates +6.39 to +6.41 vdc. Connect the DVM (+) lead to the following tester jacks and verify the indications given.

(a) ATE 20: +2.288 to +2.434 vdc
(b) ATE 21: -1.139 to -1.223 vdc
(c) ATE 36: +1 vdc maximum
(d) ATE 13: +1 vdc maximum
(e) ATE 32: +13.5 to +15.5 vdc
(f) ATE 29: 0 ± 80 mvdc
(g) ATE 23: +0.73 to +0.77 vdc
(h) ATE 12: +1 vdc maximum
(i) ATE 26: -3.101 to -3.499 vdc

(4) DC Baro Signal Processing

(a) Set BARO INPUT switch to VAR. Connect the DVM (+) lead to BP-28 and multimeter (+) lead to ATE 15. Decrease BARO ADJ dial until DVM indicates -0.49 to -0.51 vdc. Verify multimeter indication of step 4. below. Connect DVM (+) lead to the following tester jacks, except step 4., and verify the indications given.

1. ATE 29: -0.667 ± 0.100 vdc
2. ATE 28: -0.667 ± 0.100 vdc (delay reading until voltage level stabilizes).
3. ATE 12: +12 vdc minimum
4. ATE 15: +1 vdc maximum (verify that indication is +1 vdc maximum for 5 seconds or more after adjusting BARO ADJ).
5. ATE 16: +1 vdc maximum.

(b) Set GEAR 1 switch to UP. Connect the DVM (+) lead to the following tester jack and verify the indications given.

1. ATE 32: +12 vdc **minimum** on DVM.
2. ATE 15: Multimeter switches to +12 vdc minimum (delay reading approximately 2 seconds). Allow another 1 second delay and verify the following lights. Actual time delays will be measured in a later step.
3. Tester AURAL light - on.
4. Tester 1, 2 lights - on.
5. Tester 3 light - flashing.
6. For models 070, 071, 072, 073, 079, 081; tester EVENT light on.

   For model 087, tester EVENT light off.
7. Tester GPWS VAL light - off.
8. Computer ball 3 (TAKE OFF) - white.
9. Computer GPWC OK - off.

(c) Connect the DVM (+) lead to ATE 63. The DV, shall indicate -0.1 to + 1.0 vdc.

(d) Increase tester VOLUME dial as required for speaker to be on. The audio tone from the speaker shall resemble the "whoop-whoop" of a police siren followed by the words "pull up" for all models except model 079, which produces the word "terrain". The actual waveform will be checked in a later step.

NOTE: For model 087, the audio volume will automatically reduce after three complete "whoop-whoop pull-up" cycles.

(e) Connect the DVM (+) lead to BP-28. Increase the BARO ADJ dial until the DVM indicates +0.09 to +0.11 vdc. Verify multimeter (at ATE 15) and tester indications below.

1. ATE 15: +1 vdc maximum
2. Tester AURAL lamp - off
3. Tester 1 lamp - off
4. Tester 2 lamp - off
5. Tester 3 lamp - off

6. Tester EVENT lamp - off

7. Tester GPWS VAL lamp - off

8. Tester G/S lamp - off

(f) Increase BARO ADJ dial until DVM (at BP-28) indicates +0.49 to +0.51 vdc. Connect the DVM (+) lead to the following jacks and verify indications.

1. ATE 29: +0.667 ± 0.100 vdc

2. ATE 28: +0.667 ± 0.100 vdc (delay reading until voltage level stabilizes).

(g) Adjust the VOLUME dial until fully clockwise. The speaker shall be off.

(h) Set the RAD INPUT switch to FIXED. Connect the DVM (+) lead to ATE 29. The DVM shall indicate 0 ± 95 mvdc.

(5) AC Baro Signal Processing

(a) Adjust VOLUME control to normal level (counterclockwise). Set the FUNCT switch to AC and the DVM to indicate AC. Connect DVM (+) lead to BP-39. Adjust the 115 vac power source for a DVM indication of 25.8 to 26.2 vac. Connect the DVM (+) lead to BP-37. Increase the BARO ADJ dial for a DVM indication of 0.245 to 0.255 vac. Connect the DVM, set to DC, (+) lead to ATE 29. The DVM shall indicate 0 ± 95 mvdc.

NOTE: The BARO ADJ dial must remain above 5.0 to obtain AC voltages which are in-phase with the reference voltage.

(b) Set the RAD INPUT switch to VAR. The DVM (ATE 29) shall indicate +0.567 to +0.767 vdc. The computer ball 3 (TAKE OFF) shall be black.

(c) Set the DVM to AC and connect (+) lead to BP-39. Decrease 115 vac power until DVM indicates 19.8 to 20.2 vac. Set the DVM to DC and connect (+) lead to ATE 29. The DVM shall indicate +0.552 to +0.782 vdc.

(d) Set the ACREF switch to HI. Set the DVM to AC and connect (+) lead to BP-39. Adjust the 115 vac power source for 89 to 91 vac. Set the DVM to DC and connect (+) lead to ATE 29. The DVM shall indicate +0.527 to +0.807 vdc.

(e) Set the DVM to AC and connect (+) lead to BP-39. Adjust the 115 vac power source for 114 to 116 vac. Set the DVM to DC and connect (+) lead to ATE 29. The DVM shall indicate +0.542 to +0.792 vdc.

(f) Set the GEAR 2 switch to DN. Set the DVM to AC and connect the (+) lead to BP-37. Decrease the BARO ADJ dial until the DVM indicates between 0.245 and 0.255 vac. Set the DVM to DC and connect the (+) lead to ATE 29. The voltage shall be -0.542 to -0.792 vdc.

NOTE: The BARO ADJ dial must be less than 5.0 to obtain AC voltages out of phase with the reference voltage. Delay output readings until the voltage level is stabilized.

(g) Verify that multimeter (at ATE 15) indicates +1 vdc maximum.

(6) Flap Delay Logic

(a) Connect the multimeter (+) lead to ATE 31. Simultaneously set the FLAPS 1 switch to UP and turn on the stopwatch. Turn off stopwatch when the multimeter switches to +12 vdc minimum. The time shall be 1.9 to 3.4 seconds.

(b) Connect the multimeter (+) lead to ATE 15. After approximately 2 seconds the multimeter shall switch to +12 vdc minimum.

(7) Altitude Loss Comparator Verification

(a) Set FLAPS 1 switch to DN and DVM to AC. Connect DVM (+) lead to BP-37. Increase BARO ADJ dial until the DVM indicates between 48 and 52 mvac. Simultaneously set GEAR 2 switch to UP and turn on the stopwatch. Turn off the stopwatch when the multimeter (at ATE 15) switches to +12 vdc minimum. The time shall be 5 to 30 seconds. See note after test step (5)(f) above.

(b) Set GEAR 1 switch to DN. Decrease BARO ADJ dial until the DVM (at BP-37) indicates between 98 and 102 mvac. Set the DVM to DC and connect the (+) lead to BP-20. Increase the RAD ALT dial for a DVM indication of +12.14 to +12.16 vdc. Simultaneously set the GEAR 1 switch to UP and turn on the stopwatch. Turn off the stopwatch when the multimeter (at ATE 15) switches to +12 vdc minimum. The time shall be 6 to 15 seconds.

(c) For model 070, simultaneously set the CADC switch to $\overline{\text{VAL}}$ and turn on the stopwatch. The AURAL light shall be off. Turn off the stopwatch when the GPWS VAL light comes on. The time shall be 4.2 to 5.5 seconds.

For models 071, 072, 073, 079; simultaneously set the BARO MON switch to OFF and turn on the stopwatch. The AURAL light shall be off. Turn off the stopwatch when the GPWS VAL light comes on. The time shall be 4.2 to 5.5 seconds.

For models 081, 087; simultaneously set the CADC switch to $\overline{\text{VAL}}$ and turn on the stopwatch. The AURAL light shall be off. Turn off the stopwatch when the GPWS VAL light comes on. The time shall be 4.2 to 5.5 seconds.

(d) The computer AIR DATA light shall be off.

(e) For model 070, set the CADC switch to VAL.

For models 071, 072, 073, 079; set the BARO MON switch to ON.

For models 081, 087; set the CADC switch to VAL.

(f) Increase the RAD ALT dial until the DVM (at BP-20) indicates +14.69 to +14.71 vdc. Connect the DVM to each tester jack and verify the indications specified.

1. ATE 10: +1 vdc maximum
2. ATE 11: +12 vdc minimum
3. ATE 12: +1 vdc maximum
4. ATE 32: -13.5 to -15.5 vdc

(8) Terrain Clearance Comparator Verification

(a) Connect DVM (+) lead to BP-20. Connect the multimeter (+) lead to ATE 12. Allow 2 seconds minimum to elapse and slowly decrease the RAD ALT dial until the multimeter switches to +12 vdc minimum. The DVM shall indicate +10.6 ± 0.6 vdc for all models except model 087. Model 087 shall be +10.53 to +11.30 vdc. For models 070, 071,072,079 Mod 4 and on, 073,081 Mod 5 and on, and 087 Mod 2 and on; connect multimeter (+) lead to ATE 36. Verify that multimeter indicates +12 vdc minimum.

(b) Delay 1 second and verify the following conditions.

1. Tester AURAL light on.
2. Computer ball 4 (GEAR/FLAP) white.
3. Connect the DVM (+) lead to ATE 64. The DVM shall indicate -0.1 to +1.0 vdc.

(c) Set the GEAR 1 switch to DN for 2 to 5 seconds and then return it to UP. Connect the multimeter (+) lead to ATE 32. The multimeter shall indicate +12 vdc minimum. Connect the multimeter (+) lead to ATE 12. The multimeter shall indicate +1 vdc maximum.

The AURAL light shall be off. For models 070,071,072,079, Mod 4 and on, 073, 081 Mod 5 and on, and 087 Mod 2 and on; connect multimeter (+) lead to ATE 36. Verify that multimeter indicates +1 vdc maximum.

(d) Decrease the RAD ALT dial until the multimeter (at ATE 12) switches to +12 vdc minimum. Connect the DVM (+) lead to BP-20. The DVM shall indicate +4.4 ± 0.3 vdc for all models except model 087. Model 087 shall be +4.38 to +4.83 vdc.

(e) Set the RAD INPUT switch to FIXED. The AURAL light shall be off.

(f) Set the RAD INPUT switch to VAR. Set the BARO INPUT switch to GND and the MODE 4 switch to MODE 4. The multimeter (at ATE 12) shall switch to +1 vdc maximum.

(g) Slowly decrease the RAD ALT dial until the multimeter (at ATE 12) switches to +12 vdc minimum. The DVM (at BP-20) shall indicate +2.2 to +2.8 vdc for all models, except model 087. Model 087 shall be +3.31 + 3.95 vdc. Note the actual voltage.

(h) Set the FLAPS 2 switch to UP. The AURAL light shall be on. Wait 5 seconds after setting FLAPS 2 switch to UP and set the GEAR 1 switch to DN. The multimeter (at ATE 12) shall indicate +12 vdc minimum and the AURAL light shall remain on.

(i) Slowly increase the RAD ALT dial until the multimeter (at ATE 12) switches to +1 vdc maximum. Note the DVM (at BP-20) indication. The DVM shall indicate a voltage that is +0.10 to +0.38 vdc greater than that noted in step (8)(g).

NOTE: If out-of-tolerance condition exists, set FLAPS 2 switch to DN. Wait two seconds and set GEAR 1 switch to UP, repeat steps (8)(g) through (8)(i). Approach switching point very slowly.

(j) Set the FUNCT switch to DC and the BARO INPUT to VAR. Connect the DVM (+) lead to BP-28.

For models 070, 071, 072, 073, 079, 081; increase the BARO ADJ dial for a DVM indication of -0.29 to -0.31 vdc.

For model 087, decrease the BARO ADJ dial for a DVM indication of -0.724 to -0.726 vdc.

The multimeter (at ATE 12) shall switch to +12 vdc minimum. For model 087, set the ACREF switch to LO.

(k) Connect the DVM (+) lead to BP-20. Increase the RAD ALT dial until the multimeter (at ATE 12) switches to +1 vdc maximum. Decrease the RAD ALT dial until the multimeter switches to +12

vdc minimum. The DVM shall indicate +3.1 to +5.7 vdc for all models, except model 087. Model 087 shall be +5.38 to +6.00 vdc.

(l) Connect the DVM (+) lead to BP-28.

For models 070, 071, 072, 073, 079, 081; decrease the BARO ADJ dial until the DVM indicates -0.64 to -0.66 vdc.

For model 087, decrease the BARO ADJ dial until the DVM indicates -0.899 to -0.901 vdc.

Connect the DVM (+) lead to BP-20. Increase the RAD ALT dial until the multimeter (at ATE 12) switches to +1 vdc maximum. Decrease the RAD ALT dial until the multimeter switches to +12 vdc minimum. The DVM shall indicate +7.76 to +10.4 vdc for all models, except model 087. Model 087 shall be +9.30 to +10.50 vdc.

(m) Connect the multimeter (+) lead to ATE 15. The multimeter shall indicate +1 vdc maximum.

(n) Set the FLAP switch to FLAP. The AURAL, 1, 2, 3, EVENT, GPWS VAL, and G/S lights shall be off.

(o) Connect the multimeter (+) lead to ATE 31. Set the FLAPS 2 switch to DN. After approximately 2 seconds, the multimeter shall switch to +12 vdc minimum. Connect the multimeter (+) lead to ATE 15. After approximately another 2 seconds the multimeter shall switch to +12 vdc minimum.

(p) For model 087 only, perform steps 1. through 3.

1. Set FLAP switch to OFF. Set the MODE 4 switch to OFF. Connect the multimeter (+) lead to ATE 12. The multimeter shall indicate +12 vdc minimum.

2. Connect the DVM (+) lead to BP-28. Increase the BARO ADJ dial until the DVM indicates -0.64 to -0.66 vdc. Connect the DVM (+) lead to BP-20. Increase the RAD ALT dial until the multimeter (at ATE 12) switches to +1 vdc maximum. Decrease the RAD ALT dial until the multimeter switches to +12 vdc minimum. The DVM shall indicate +9.23 to +10.70 vdc.

3. Connect the DVM (+) lead to BP-28. Increase the BARO ADJ dial until the DVM indicates -0.340 to -0.360 vdc. Connect the DVM (+) lead to BP-20. Decrease the RAD ALT dial until

the multimeter (at ATE 12) switches to +12 vdc minimum. The DVM shall indicate +4.28 to +5.72 vdc.

(q) For all models, except model 087, set the ACREF switch to LO, FLAP switch to OFF, and MODE 4 switch to OFF.

NOTE: To restart functional test procedure at this point, set all tester controls per step 2C(1) except leave PWR switch on. Then set FLAPS 1 and 2, and GEAR 1 to DN, RAD INPUT to VAR, and BARO INPUT to VAR. Set RAD ALT dial to 2.0 ± 0.1 on dial. For normal test sequence omit this note.

(9) Sinkrate Comparator Verification

(a) Connect the DVM (+) lead to BP-28. Decrease the BARO ADJ dial (slowly) until the DVM indicates -0.74 to -0.76 vdc. Connect the DVM (+) lead to BP-20 and the multimeter (+) lead to ATE 16. Decrease the RAD ALT dial (very slowly) until the multimeter indicates +12 vdc minimum. The DVM shall indicate +1.49 to +8.03 vdc for all models, except model 087. Model 087 shall be +2.94 to +6.66 vdc. Note the actual voltage.

(b) Verify that the tester AURAL light is on and the computer ball 1 (HI SINK) is white. Connect the DVM (+) lead to ATE 61. The DVM shall indicate -0.1 to +1.0 vdc.

(c) Connect the DVM (+) lead to BP-20. Increase the RAD ALT dial (very slowly) until the multimeter (at ATE 16) indicates +1 vdc maximum. Note the DVM indication. The DVM shall indicate a voltage that is +0.14 to +0.42 vdc greater than that noted in step (9)(a).

(d) Connect the DVM (+) lead to BP-28. Decrease the BARO ADJ dial until the DVM indicates -1.09 to -1.11 vdc. Connect the DVM (+) lead to BP-20. Increase the RAD ALT dial until the DVM indicates +18.06 to +18.08 vdc. Connect the DVM (+) lead to ATE 21. The DVM shall indicate -4.4 ± 0.2 vdc.

(e) Connect the DVM (+) lead to BP-20. Decrease RAD ALT dial until multimeter (at ATE 16) switches to +12 vdc minimum. The DVM shall indicate +14.72 to +18.77 vdc for all models, except model 087. Model 087 shall be +15.68 to +17.91 vdc.

(f) Connect the DVM (+) lead to BP-28. Decrease the BARO ADJ dial until the DVM indicates -1.49 to -1.51 vdc. Connect the DVM (+) lead to BP-20. Increase the RAD ALT dial until the DVM indicates +21.75 to +21.77 vdc. Connect the DVM (+) lead to ATE 21. The voltage shall be -6.4 ± 0.3 vdc.

(g) Connect the multimeter (+) lead to the following tester jacks and verify indications.

1. ATE 9: +1 vdc maximum
2. ATE 17: +1 vdc maximum

(h) Connect the DVM (+) lead to BP-20 and multimeter (+) lead to ATE 16. Decrease the RAD ALT dial until the multimeter switches to +12 vdc minimum. The DVM shall indicate +19.97 to +22.15 vdc for all models, except model 087. Model 087 shall be +20.45 to +21.73 vdc.

(i) Connect the DVM (+) lead to BP-28. Decrease the BARO ADJ dial until the DVM indicates -2.24 to -2.26 vdc. Connect the DVM (+) lead to BP-20. Increase the RAD ALT dial until the DVM indicates +25.55 to +25.57 vdc. Connect the DVM (+) lead to ATE 21. The DVM shall indicate -8.9 to -9.9 vdc.

(j) Connect the DVM (+) lead to BP-20. Decrease the RAD ALT dial until the multimeter (at ATE 16) switches to +12 vdc minimum. The DVM shall indicate +24.33 to +25.95 vdc for all models, except model 087. Model 087 shall be +24.52 to +25.72 vdc.

(10) Sinkrate Inhibit Logic

(a) Set the ACREF switch to OPEN. The AURAL light shall be off.

(b) Set the CADC switch to $\overline{\text{VAL}}$ and the ACREF switch to LO. The AURAL light shall remain off and the GPWS VAL light shall remain on. Verify that the AURAL light remains off at least 7 seconds after setting the ACREF switch to LO. The GPWS VAL light may be delayed in coming on.

(c) Simultaneously set the CADC switch to VAL and turn on the stopwatch. Turn off the stopwatch when the AURAL light comes on. The time shall be 2.5 to 5.5 seconds.

(d) Connect the DVM (+) lead to BP-28 and the multimeter (+) lead to ATE 8. Decrease the BARO ADJ dial until the DVM indicates -2.99 to -3.01 vdc. Increase the RAD ALT dial until the multimeter switches to +1 vdc maximum. The AURAL light shall go off.

(11) Radio Comparator Verfication (2450 feet)

(a) Set the BARO INPUT switch to GND. Connect the DVM (+) lead to

BP-20. Decrease the RAD ALT dial until the multimeter (at ATE 8) switches to +12 vdc minimum. The DVM shall indicate +25.35 to +26.75 vdc. Note the actual voltage.

(b) Increase the RAD ALT dial until the multimeter (at ATE 8) switches to +1 vdc maximum. Note the DVM indication. The DVM shall indicate a voltage that is +0.094 to +0.282 vdc greater than that noted in step (11)(a).

(c) For model 087 only, perform steps 1. through 5.

1. Set the BARO INPUT switch to VAR. Set the MODE 4 switch to MODE 4. Connect the DVM (+) lead to BP-28. Increase the BARO ADJ dial until the DVM indicates -0.89 to -0.91 vdc. Connect the DVM (+) lead to BP-20. Connect the multimeter (+) lead to ATE 16. Decrease the RAD ALT dial until the multimeter switches to +12 vdc minimum. The DVM shall indicate +3.68 to +7.40 vdc.

2. Connect the DVM (+) lead to BP-28. Decrease the BARO ADJ dial until the DVM indicates -1.24 to -1.26 vdc. Connect the DVM (+) lead to BP-20. Increase the RAD ALT dial until the multimeter (at ATE 16) switches to +1 vdc maximum. Decrease the RAD ALT dial until the multimeter switches to +12 vdc. The DVM shall indicate +16.27 to +18.12 vdc.

3. Connect the DVM (+) lead to BP-28. Decrease the BARO ADJ dial until the DVM indicates -1.49 to -1.51 vdc. Connect the DVM (+) lead to BP-20. Increase the RAD ALT dial until the multimeter (at ATE 16) switches to +1 vdc maximum. Decrease the RAD ALT dial until the multimeter switches to +12 vdc minimum. The DVM shall indicate +19.82 to +20.82 vdc.

4. Connect the DVM (+) lead to BP-28. Decrease the BARO ADJ dial until the DVM indicates -2.24 to -2.26 vdc. Connect the DVM (+) lead to BP-20. Increase the RAD ALT dial until the multimeter (at ATE 16) switches to +1 vdc maximum. Decrease the RAD ALT dial until the multimeter switches to +12 vdc minimum. The DVM shall indicate +23.90 to +25.13 vdc.

5. Set the BARO INPUT switch to GND and the MODE 4 switch to OFF.

(12) Airborne Self Test Logic

(a) Connect the multimeter (+) lead to ATE 14. Decrease the RAD ALT dial until the DVM (at BP-20) indicates +17.99 to +18.01 vdc. Verify that AURAL light is off.

NOTE: Delay proceeding until multimeter switches to +12 vdc minimum. The multimeter may remain at +12 vdc minimum depending on how fast the RAD ALT dial is decreased to the required setting.

(b) Connect oscilloscope (-) lead to ATE 7 and (+) lead to BP-11. Adjust vertical display for 10 V/division. Connect the trigger input to BP-22. Adjust trigger for negative slope, external, DC. Set the GEAR 1 switch to UP. Set the SELF TEST switch to SELF TEST. Measure, on the scope, the time the display is +28 vdc before it drops to 0. The time shall be 0.6 to 1.6 seconds. Verify that the EVENT light is off, GPWS VAL light is on, and the G/S light is on.

(c) Set the GEAR 1 switch to DN. The AURAL light shall be off.

(d) Adjust the VOLUME dial as necessary, since the volume level may be lower than during normal warnings. Set the GEAR 1 switch to UP. The AURAL light shall come on. The speaker shall produce the word "glideslope" once, followed by the "whoop-whoop pull-up"; except model 079 shall produce "whoop-whoop terrain"; sequence after the AURAL light comes on.

(13) Radio Comparator Verification (1000 feet)

(a) Connect the multimeter (+) lead to ATE 9. Decrease the RAD ALT dial until the multimeter indicates +12 vdc minimum. The DVM (at BP-20) shall indicate +16.57 to +17.93 vdc and the AURAL light shall be off. Note the actual voltage.

(b) Increase the RAD ALT dial until the multimeter (at ATE 9) switches to +1 vdc maximum. Note the DVM indication. The DVM shall indicate a voltage that is +0.25 to +0.75 vdc greater than that noted in step (13)(a).

(14) Airborne Self Test Inhibit Logic

(a) Set the INH GND switch to INH GND. The AURAL lamp shall be off.

(b) Set the INH GND switch to OFF and the INH +28 switch to INH +28. The AURAL lamp shall remain off for 2 seconds minimum after setting the INH +28 switch. The GPWC VAL light shall come on.

(c) Set the INH +28 switch to OFF and the R/A switch to $\overline{\text{VAL}}$. Connect the multimeter (+) lead to ATE 16. The multimeter shall indicate +1 vdc maximum. The tester AURAL and G/S lights shall be off and the computer RADIO ALT light shall be off.

(d) Verify that the oscilloscope is still connected to ATE 7 (-) and BP-11 (+). Move the trigger input lead from BP-22 to BP-19. Adjust the trigger for a positive slope, external, DC. Set the R/A switch to VAL and measure the time at which the display is +28 vdc before it drops to 0. The time shall be 2.7 to 5.7 seconds.

(e) For model 070, set the OUTPUT switch to AC-2.

For model 071, 072, 073, 079; verify that OUTPUT switch is at AC-1.

For models 081, 087; set the OUTPUT switch to AC-2.

Set the BARO MON switch to OFF. The AURAL light shall go off and the G/S light shall be on.

(f) For models 070, 071, 072, 073; set the BARO MON switch to ON. Disconnect the oscilloscope leads from the tester. Set the BARO INPUT switch to VAR. Wait for the AURAL light to come on before proceeding. Simultaneously set the SELF TEST switch to OFF and turn on the stopwatch. Turn off the stopwatch when the EVENT light comes on. The time shall be 4.7 to 5.8 seconds.

For models 079, 081; set the BARO MON switch to ON. Disconnect the oscilloscope leads from the tester. Set the BARO INPUT switch to VAR. Wait for the AURAL light to come on before proceeding. Simultaneously set the SELF TEST switch to OFF and turn on the stopwatch. Turn off the stopwatch when the EVENT light comes on. The time shall be 4.7 to 5.8 seconds.

For model 087, set the BARO MON switch to ON. Disconnect the oscilloscope leads from the tester. Set the BARO INPUT switch to VAR. Wait for the AURAL light to come on before proceeding. Set the SELF TEST switch to OFF.

(g) Set the BARO INPUT switch to GND. Set the FLAPS 2 switch to UP. If models 070, 081, 087 are being tested, set the OUTPUT switch to AC-1.

NOTE: To restart functional test procedure at this point, set all tester controls per step 2C(1), except leave PWR switch on. Then set the FLAPS 1 switch to DN, and the RAD INPUT switch to VAR. Connect multimeter (+) lead to ATE 10. Increase RAD ALT dial until multimeter indicates +1 vdc maximum. For normal test sequence omit this note.

(15) Radio Comparator Verification (700 feet)

(a) Connect the multimeter (+) lead to ATE 10. Decrease the RAD ALT dial until the multimeter switches to +12 vdc minimum. The DVM (at BP-20) shall indicate +12.31 to +13.78 vdc. Note the actual voltage.

(b) Increase the RAD ALT dial until the multimeter (at ATE 10) switches to +1 vdc maximum. Note the actual DVM indication. The DVM shall indicate +0.38 to +1.14 vdc greater than the reading noted in step (15)(a).

(16) Closure Time Constant Verification

(a) Connect the DVM (+) lead to ATE 26. The DVM shall indicate -169 to +349 mvdc.

(b) Connect the DVM (+) lead to ATE 24. Set the SEL switch to B and the TEST SIG ON/OFF switch to ON. Increase the TEST SIG dial until the DVM indicates +8.19 to +8.21 vdc. Connect DVM (+) lead to ATE 25 and the multimeter (+) lead to ATE 14. The DVM shall indicate +2.200 to +2.600 vdc and the multimeter +12 vdc minimum.

(c) Set the GEAR 1 switch to DN. Delay output reading until the voltage level stabilizes. The DVM (at ATE 25) shall indicate +3.146 to +3.510 vdc. The multimeter (at ATE 14) shall indicate +1 vdc maximum. The tester AURAL light shall come on and the computer ball 2 (TERRAIN) shall be white. Connect the DVM (+) lead to ATE 62. The DVM shall indicate -0.1 to +1.0 vdc.

(17) Radio Comparator Verification (300 feet)

(a) Set the TEST SIG ON/OFF switch to OFF and the FLAPS 2 switch to DN. Connect the DVM (+) lead to BP-20 and the multimeter (+) lead to ATE 11. Decrease the RAD ALT dial until the multimeter indicates +1 vdc maximum. The DVM shall indicate +5.68 to +6.48 vdc. Note the actual voltage.

(b) Increase the RAD ALT dial until the multimeter (at ATE 11)switches to +12 vdc minimum. Note the DVM indication. The DVM indication shall be +0.66 to +1.98 vdc greater than the indication of step (17)(a).

(18) Radio Comparator Verification (200 feet)

(a) For models 070, 071, 072, 079 Mod 4 and on, 073, 081 Mod 5 and on, and 087 Mod 2 and on; set PROGRAM MODE 4 switch to ON. Connect the multimeter (+) lead to ATE 36. Decrease the RAD ALT dial until the multimeter switches to +12 vdc minimum. The DVM (at BP-20) shall indicate +4.14 to +4.70 vdc. Note the actual voltage. For models 070, 071, 072, 079 Mod 4 and on, 073, 081 Mod 5 and on, and 087 Mod 2 and on.

(b) Increase the RAD ALT dial until the multimeter (at ATE 36) switches to +1 vdc maximum. Note the DVM indication. The DVM shall indicate +0.5 to +1.5 vdc greater than that noted in step (18)(a). Set PROGRAM MODE 4 switch to OFF.

(19) Radio Rate Limits and Bias Circuit Verification

(a) Connect the multimeter (+) lead to ATE 31. Set the FLAP switch to FLAP. Wait for the multimeter to indicate +12 vdc minimum. Adjust the TEST SIG dial to between 4.9 and 5.1 (numbers on dial). Set the SEL switch to C and the TEST SIG ON/OFF switch to ON. Connect the DVM (+) lead to ATE 23. Increase the TEST SIG dial until the DVM indicates -0.01 to +0.01 vdc (dial may be increased several turns before DVM changes). Connect the DVM (+) lead to ATE 22. The DVM shall indicate +2.015 to +2.125 vdc.

(b) Set the FLAP switch to OFF. Wait for the multimeter (at ATE 31) to indicate +1 vdc maximum. Connect the DVM (+) lead to ATE 23. Decrease the TEST SIG dial until the DVM indicates -0.01 to +0.01 vdc. Connect the DVM to ATE 22. The DVM shall indicate +1.307 to +1.393 vdc.

(c) Connect the multimeter (+) lead to ATE 36. Decrease the RAD ALT dial until the multimeter switches to +12 vdc minimum. Connect the DVM (+) lead to ATE 23. The DVM shall indicate -0.631 to -0.663 vdc.

(d) Decrease the TEST SIG dial until the DVM (at ATE 23) indicates -0.01 to +0.01 vdc. Connect the DVM (+) lead to ATE 22. The DVM shall indicate +0.336 to +0.364 vdc.

(20) Closure Comparator Verification (CW)

(a) Connect a jumper from ATE 7 to ATE 23. Set the SEL switch to B and the FLAPS 2 switch to UP. Connect the DVM (+) lead to ATE 25. Increase, in small increments, the TEST SIG dial until the DVM indicates +2.99 to +3.01 vdc. Connect the DVM (+) lead to ATE 21 and the multimeter (+) lead to ATE 14. Slowly increase the RAD ALT dial until the multimeter switches to +12 vdc minimum. Slowly decrease the RAD ALT dial until the multimeter indicates +1 vdc maximum. The DVM shall indicate -2.925 to -3.055 vdc. Note the actual voltage.

NOTE: The unit contains a 7 second filter circuit. The operator must move the TEST SIG dial in small increments and wait for the output at ATE 25 to stabilize, then continue in small increments until the setting is found. The RAD ALT dial must be moved slowly to make the required measurement at ATE 21.

(b) Increase the RAD ALT dial until the multimeter (at ATE 14) switches to +12 vdc minimum. Note the DVM (at ATE 21) indication. The DVM shall indicate -10 to -60 mvdc more negative than the indication noted in step (20)(a).

NOTE: If the indications are out of tolerance, repeat steps (20)(a) and (20)(b).

(21) Radio Comparator Verification (50 feet)

(a) Set the TEST SIG ON/OFF switch to OFF. Remove the jumper from ATE 7 to ATE 23. Connect the DVM (+) lead to BP-20 and the multimeter (+) lead to ATE 13. Decrease the RAD ALT dial until the multimeter switches to +12 vdc minimum. The DVM shall indicate +1.327 to +1.495 vdc. Note the actual voltage.

(b) Increase the RAD ALT dial until the multimeter (at ATE 13) switches to +1 vdc maximum. Note the DVM (at BP-20) indication. The DVM shall indicate +0.5 to +0.9 vdc greater than the voltage noted in step (21)(a).

(22) Closure Warning Verification

(a) Set the FLAPS 1 and GEAR 1 switches to UP. Set the SEL switch to A.

NOTE: To restart the functional test procedure at this point, set all tester controls per step 2C(1), except leave the PWR switch on. Then set the RAD INPUT switch to VAR. For normal test sequence omit this note.

NOTE: In steps (22)(b), (22)(c), and (22)(d), a special linear altitude, but nonlinear ramp is applied to the radio input. This ramp will automatically stop and hold the altitude voltage for noting (at BP-20) when the AURAL light comes on.

(b) Increase the RAD ALT dial until the DVM (at BP-20) indicates +23.9 to +24.0 vdc. Set the WARN SEL switch to 2. Connect the DVM (+) lead to ATE 70. Increase the RATE dial for a DVM indication of +2.99 to +3.01 vdc. Set the HOLD switch to HOLD. Connect the DVM (+) lead to ATE 26 and wait for an indication of -0.2 to +0.4 vdc. Connect the DVM (+) lead to BP-20. Set the RESET switch to OFF. As soon as the AURAL light comes on, note the DVM indication. The DVM shall indicate +8.56 to +17.61 vdc.

(c) Set the RESET switch to RESET. Increase the RAD ALT dial until the DVM (at BP-20) indicates +26.16 to +26.18 vdc. Connect the DVM (+) lead to ATE 70. Increase the RATE dial until the DVM indicates +6.99 to +7.01 vdc. Connect the DVM (+) lead to ATE 26 and wait for an indication of -0.2 to +0.4 vdc. Set the HOLD switch to OFF and return to HOLD. Connect the DVM lead to BP-20. Set the RESET switch to OFF. As soon as the AURAL light comes on, note the DVM indication. The DVM shall indicate +18.08 to +21.61 vdc.

(d) Set the RESET switch to RESET. Connect the DVM (+) lead to ATE 26 and wait for an indication of -0.2 to +0.4 vdc. Set the GEAR 1 switch to DN. Connect the DVM (+) lead to BP-20. Set the HOLD switch to OFF and then to HOLD. Set the RESET switch to OFF. As soon as the AURAL light comes on, note the DVM indication. The DVM shall indicate +16.08 to +20.06 vdc.

(e) Set the WARN SEL switch to OPEN, RESET switch to RESET, and HOLD switch to OFF.

NOTE: To restart the functional test procedure at this point, set all tester controls per step 2C(1), except leave PWR switch on. Then set RAD INPUT switch to VAR and connect DVM (+) lead to BP-20. Increase the RAD ALT dial until the DVM indicates +26.16 to +26.18 vdc. Set the GEAR 1 switch to DN. For normal test sequence, omit this note.

(23) Glideslope Soft Comparator Verification (GSS)

(a) Connect the DVM (+) lead to BP-32 and the multimeter (+) lead to ATE 17. Decrease the GS ADJ dial, slowly and smoothly, until the multimeter switches to +12 vdc minimum. The DVM shall indicate -91 to -104 mvdc for all models, except model 081, Mod 3. Model 081, Mod 3 shall be -95 to -111 mvdc. Note the actual voltage.

NOTE: In this and following steps involving GS ADJ dial, turn dial slowly and smoothly to avoid triggering the glideslope beam filter circuit. If this circuit triggers, the glideslope warnings will be disabled for 15 seconds, and the output lamp G/S will not come on and/or high volume "glideslope" voice will not be heard. If this occurs set GS ADJ to 5.0 $\pm$ 0.1 and repeat step (23)(a).

(b) Increase the GS ADJ dial, slowly and smoothly, until the multimeter at (ATE 17) switches to +1 vdc maximum. Note the DVM (at BP-32) indication. The actual voltage shall be +15 to +30 mvdc more positive (less negative) than that noted in step (23)(a).

(24) Glideslope Hard Comparator Verification (GSH)

(a) Connect the multimeter (+) lead to ATE 18. Decrease the GS ADJ dial, slowly and smoothly, until the multimeter switches to +12 vdc minimum. The DVM (at BP-32) shall indicate -140 to -160 mvdc. Note the actual voltage.

(b) Increase the GS ADJ dial, slowly and smoothly, until the multimeter (at ATE 18) switches to +1 vdc maximum. Note the DVM indication. The actual voltage shall be +15 to +30 mvdc more positive (less negative) than the voltage noted in step (24)(a).

(25) Glideslope Warning Logic

(a) Set the GS CANC switch to GS CANC for one second minimum, then return it to OFF. Set the INH 1 and 2 switches to FRONT. Connect the multimeter (+) lead to ATE 9. Decrease the RAD ALT dial until the multimeter switches to +12 vdc minimum. The G/S light shall come on and the output from the speaker shall be the word "glideslope" repeated approximately every 5 seconds. Adjust VOLUME dial as required. The actual time will be measured later.

(b) Set the INH 1 switch to BACK. The G/S light shall go off. Verify that there is no periodic output from the speaker for 10 seconds minimum.

(c) Set the INH 1 switch to FRONT. The word "glideslope" shall begin in approximately one second.

(d) Set the INH 2 switch to BACK. The G/S light shall go off.

(e) For models 070, 071, 072, 073, 079; set the INH 2 switch to FRONT and the MODE 1 switch to VOR. The G/S light shall come on.

For model 081, set the INH 2 switch to FRONT, MODE 1 switch to VOR, and GSH switch to $\overline{\text{VAL}}$. The G/S light shall come on.

For model 087, set the INH 2 switch to FRONT and the MODE 1 switch to VOR. The G/S light shall come on.

(f) For models 070, 071, 072, 073, 079; set the MODE 2 switch to VOR. The G/S light shall go off.

For model 081, set the GSL switch to $\overline{\text{VAL}}$. The G/S light shall go off.

For model 087, set the MODE 2 switch to VOR. The G/S light shall go off.

(g) For model 070, 071, 072, 073, 079; set the MODE 1 switch to ILS. The G/S light shall come on.

For model 081, set the MODE 1 switch to ILS and the MODE 2 switch to VOR. The G/S light shall come on.

For model 087, set the MODE 1 switch to ILS. The G/S light shall come on.

(h) For models 070, 071, 072, 073, 079; set the GSH switch to $\overline{\text{VAL}}$. The G/S light shall be on.

For model 081, set the MODE 1 switch to VOR. The G/S light shall go off.

For model 087, set the GSH switch to $\overline{\text{VAL}}$. The G/S light shall be on.

(i) For models 070, 071, 072, 073, 079; set the GSL switch to $\overline{\text{VAL}}$. The G/S light shall go off.

For model 081, set the GSH switch to VAL. The G/S light shall come on.

For model 087, set the GSL switch to $\overline{\text{VAL}}$. The G/S light shall go off.

(j) For models 070, 071, 072, 073, 079; set the GSH switch to VAL. The G/S light shall come on.

For model 081, set the GSL switch to VAL. The G/S light shall be on.

For model 087, set the GSH switch to VAL. The G/S light shall come on.

(k) Set the R/A switch to $\overline{\text{VAL}}$. The G/S light shall go off.

(l) Set the R/A switch to VAL and the RAD INPUT switch to FIXED. The G/S light shall be off.

(m) Set the RAD INPUT switch to VAR and the GEAR 1 switch to UP. The G/S light shall be off.

(n) For models 070, 071, 072, 073, 079; set the GEAR 1 switch to DN. Set the GS CANC switch to GS CANC for one second minimum, then return it to OFF. The G/S light shall be off.

For models 081, 087; set the GEAR 1 switch to DN. Set the SELF TEST switch to SELF TEST for one second minimum, then return it to OFF. The G/S light shall be off.

(o) Increase the RAD ALT dial until the multimeter (at ATE 9) switches to +1 vdc maximum. The G/S light shall be off.

(26) Glideslope Voice Repetition Rate and Amplitude

(a) Connect the DVM (+) lead to BP-20. Decrease the RAD ALT dial until the DVM indicates +16.09 to +16.11 vdc. Connect the DVM (+) lead to BP-32. Increase the GS ADJ dial, slowly and smoothly, until the DVM indicates -98 to -102 mvdc. Connect the oscilloscope (-) lead to ATE 7 and the (+) lead to BP-13. Set scope for internal trigger, DC, 1.0 volt/division, and adjust as necessary. Observe the scope for the maximum peak-to-peak voltage during the "glideslope"

word. It shall be 2.3 to 3.5 volts peak-to-peak for all models, except model 070 which shall be 2.8 to 4.3 volts peak-to-peak. Observe the time between "glideslope" words, without including words. It shall be 3.5 to 5.8 seconds.

(b) Decrease the GS ADJ dial, slowly and smoothly, until the DVM (at BP-32) indicates -0.148 to -0.152 vdc. Observe the time on the scope between "glideslope" words, without including words. It shall be 2.25 to 3.75 seconds.

(c) Connect the DVM (+) lead to BP-20. Decrease the RAD ALT dial until the DVM indicates +9.39 to +9.41 vdc. Observe the time, on the scope, between "glideslope" words, without including words. It shall be 1.1 to 1.9 seconds.

(d) For model 070, connect the multimeter (+) lead to ATE 18. Decrease the GS ADJ dial, slowly and smoothly, until the multimeter switches to +12 vdc minimum. Note, ATE 18 may already be at a +12 vdc minimum; if so, no adjustment is necessary. Set LOAD switch to OFF. Connect an 8 ohm, 5% 2 watt resistor across BP-14 and TP-33. Connect scope (+) lead to TP-33. Observe scope for maximum peak-to-peak voltage. It shall be 9.5 to 11.5 volts peak-to-peak.

For models 071, 072, 073, 079, 081, 087; connect the multimeter (+) lead to ATE 18. Decrease the GS ADJ dial, slowly and smoothly, until the multimeter switches to +12 vdc minimum. Note, ATE 18 may already be at a +12 vdc minimum; if so, no adjustment is necessary. Observe scope for maximum peak-to-peak voltage. It shall be 2.3 to 3.5 volts peak-to-peak.

(e) For model 070, connect multimeter (+) lead to ATE 11. Decrease RAD ALT dial until multimeter switches to +1 vdc maximum. The scope (at TP-33) shall display a maximum peak-to-peak voltage of 15.5 to 18.5 volts and the computer ball 5 (G/S) shall be white. Connect the DVM (+) lead to ATE 65 and verify -0.1 to +1.0 vdc. Remove 8 ohm load and set LOAD switch to LOAD. Connect scope (+) lead to BP-13.

For models 071, 072, 073, 079, 081, 087; connect multimeter (+) lead to ATE 11. Decrease RAD ALT dial until multimeter switches to +1 vdc maximum. The scope (at BP-13) shall display a maximum peak-to-peak voltage of 4.6 to 6.9 volts and the computer ball 5 (G/S) shall be white. Connect the DVM (+) lead to ATE 65 and verify -0.1 to +1.0 vdc.

(f) Set the GS CANC switch to GS CANC for one second minimum, then return it to OFF. The G/S light shall be on for all models, except model 087. For model 087, the G/S light shall be off.

(g) For models 070, 071, 072, 073, 079; set the MODE 1 switch to VOR during a "glideslope" word. The scope (at BP-13) volume shall diminish to the approximate value listed below for remainder of word and then stop. The scope shall display a maximum peak-to-peak voltage of 2.3 to 3.5 volts for all models, except model 070 which shall be 2.8 to 4.3 volts peak-to-peak. To repeat test, return MODE 1 switch to ILS, until another "glideslope" word occurs and then switch to VOR during word.

For model 081, set the GSH switch to $\overline{\text{VAL}}$ during a "glideslope" word. The scope volume shall diminish to the approximate value listed below for remainder of word and then stop. The scope shall display a maximum peak-to-peak voltage of 2.3 to 3.5 volts. To repeat test, return GSH switch to VAL, until another "glideslope" word occurs and then switch to $\overline{\text{VAL}}$ during word.

For model 087, connect multimeter (+) lead to ATE 9. Increase RAD ALT dial until multimeter indicates +1 vdc maximum. Wait one second and connect multimeter (+) lead to ATE 11. Decrease RAD ALT dial until multimeter switches to +1 vdc maximum. Set the MODE 1 switch to VOR during a "glideslope" word. The scope at (BP-13) volume shall diminish to the approximate value listed below for remainder of word and then stop. The scope shall display a maximum peak-to-peak voltage of 2.3 to 3.5 volts. To repeat test, return MODE 1 switch to ILS, until another "glideslope" word occurs and then switch to VOR during word.

(h) For models 070, 071, 072, 073, 079, 087; set the MODE 1 switch to ILS and for model 081; set GSH switch to VAL. Set the GEAR 1 switch to UP during a "glideslope" word. The scope volume shall diminish to approximate value shown below and then stop. The scope (at BP-13) shall display a maximum peak-to-peak voltage of 2.3 to 3.5 volts for all models, except model 070 which shall be 2.8 to 4.3 volts peak-to-peak. To repeat test, return GEAR 1 switch to DN until another "glideslope" word occurs and then switch to UP during word.

(i) Set the GEAR 1 switch to DN. Connect the multimeter (+) lead to ATE 18. Increase the GS ADJ dial, slowly and smoothly, until the multimeter switches to +1 vdc maximum. The scope shall display a maximum peak-to-peak voltage of 2.3 to 3.5 volts for all models, except model 070 which shall be 2.8 to 4.3 volts peak-to-peak.

(j) Set the FLAPS 1 and 2 switches to DN. Set the RAD INPUT switch to FIXED for one second minimum, then return it to VAR. The G/S light shall come on.

(k) Connect the multimeter (+) lead to ATE 31. Set FLAPS 1 switch to UP. The G/S light shall delay going off for approximately 2 seconds until the multimeter switches to +12 vdc minimum.

(27) High Level Glideslope Input Verification

(a) For models 070, 071, 072, 073, 079, 087; set the GAIN switch to HI and for model 081, verify GAIN switch is at LO. Connect DVM (+) lead to BP-20. Decrease the RAD ALT dial until the DVM indicates +3.39 to +3.41 vdc. Connect the DVM (+) lead to TP-22 except if testing model 081 connect to BP-32. Connect multimeter (+) lead to ATE 17. Increase the GS ADJ dial, slowly and smoothly, until the multimeter indicates +1 vdc maximum. Decrease the GS ADJ dial, slowly and smoothly, until the multimeter indicates +12 vdc minimum. The DVM (at TP-22) shall indicate -1.2 to -1.5 vdc for models 070, 071, 072, 073, 079, 087. The DVM (at BP-32) shall indicate -0.085 to -0.104 for model 081, mod 2; or -0.095 to -0.116 vdc for model 081, mod 3.

(b) Connect the multimeter (+) lead to ATE 18. Decrease GS ADJ dial, slowly and smoothly, until the multimeter indicates +12 vdc minimum. The DVM (at TP-22) shall indicate -1.88 to -2.22 vdc for models 070, 071, 072, 073, 079, 087. The DVM (at BP-32) shall indicate -0.133 to -0.159 vdc for model 081.

(c) Set the RAD INPUT switch to FIXED. Connect the multimeter (+) lead to ATE 17. Decrease the GS ADJ dial, slowly and smoothly, until the multimeter indicates +12 vdc minimum. The DVM (at TP-22) shall indicate -3.1 to -3.6 vdc for models 070, 071, 072, 073, 079, 087. The DVM (at BP-32) shall indicate -0.225 to -0.271 vdc for model 081, mod 2; or -0.232 to -0.272 vdc for model 081, mod 3.

(d) Connect the multimeter (+) lead to ATE 18. Decrease the GS ADJ dial, slowly and smoothly, until the multimeter indicates +12 vdc minimum. The DVM (at TP-22) shall indicate -3.76 to -4.36 vdc for models 070, 071, 072, 073, 079, 087. The DVM (at BP-32) shall indicate -0.276 to -0.324 vdc for model 081.

(28) Glideslope Beam Filter Verification

(a) Connect the DVM (+) lead to ATE 19. The DVM shall indicate 0 ± 50 mvdc. Remove DVM (+) lead from ATE 19.

(b) Set the SIGNAL switch to EXT. Adjust a signal generator output for a 1.0 ± 0.1 Hz sine wave. Connect a signal generator to tester EXT SIG HI and LO jacks. Connect the oscilloscope to ATE 7 (-) and ATE 19 (+). Adjust the signal generator

amplitude for a scope indication of 2.4 to 2.6 volts peak.

NOTE: Verify that signal generator output contains less than ±15 mvdc offset.

(c) Increase signal generator frequency until a scope display of one-half signal amplitude is reached. The scope shall indicate 1.1 to 1.3 volts peak and the signal generator frequency shall be 2.0 to 5.0 Hz.

(d) Decrease signal generator frequency through a maximum amplitude point until required scope reading of one-half signal amplitude is reached. The scope shall indicate 1.1 to 1.3 volts peak and the frequency shall be 0.1 to 0.3 Hz.

(e) Set the FLAPS 1 switch to DN and RAD INPUT switch to VAR. Decrease signal generator frequency until the scope shall indicate 0.1 to 0.2 volts peak. The G/S light may be delayed up to 15 seconds, thereafter it will flash once every generator cycle.

(f) Slowly increase the signal generator frequency for approximately 50 mvdc increase in scope display. Wait to verify that the G/S light still flashes. Continue these steps until the G/S light remains off. The scope (at ATE 19) shall indicate 0.25 to 0.45 volts peak. The measured amplitude is the threshold for the 15 second glideslope inhibit circuit.

(g) Simultaneously set the SIGNAL switch to NORM and turn on the stopwatch. Turn the stopwatch off when the G/S light comes on. The time shall be 12.2 to 18.8 seconds. Disconnect the signal generator and scope.

(h) Connect the multimeter (+) lead to ATE 17. Increase the GS ADJ dial, slowly and smoothly, until the multimeter indicates +1 vdc maximum. The G/S light shall go off.

(i) Set the RAD INPUT switch to FIXED. Increase the GS ADJ dial, slowly and smoothly, until it is set at 4.9 to 5.1 (numbers on dial). Set the FLAPS 1 and 2 switches to UP. For all models, except model 081, set the GAIN switch to LO.

NOTE: To restart the functional test procedure at this point, set all tester controls per step 2C(1) except leave PWR switch on. Then set the controls as follows:

GEAR 1 to DN

For models 070, 071, 072, 073, 079, 087, only; GSL to $\overline{\text{VAL}}$

For model 081 only, MODE 1 to VOR.

INH 1 to FRONT

MODE 2 to VOR

INH 2 to FRONT

For normal test sequence, omit this note.

(29) Ground Self Test Verification

(a) Connect the DVM (+) lead to ATE 25. Momentarily press the computer WARNING MODE RESET switch. All computer balls shall be black. Monitor the DVM for a stable indication of -6.0 to -6.4 vdc before continuing.

(b) Adjust the VOLUME dial to compensate for lower audio level during self test. Connect the multimeter (+) lead to ATE 14. Set the tester SELF TEST switch to SELF TEST and verify the following sequence of events.

1. Speaker output shall be one "glideslope".
2. Multimeter shall switch to +1 vdc maximum after approximately 2 seconds.
3. AURAL light shall come on.
4. Speaker output shall be "whoop whoop pull-up", except model 079 shall be "whoop whoop terrain", for as long as the multimeter indicates +1 vdc maximum.
5. When the multimeter switches to +12 vdc minimum, the speaker shall complete the last "pull-up" or "terrain".

NOTE: To repeat this test, set SELF TEST to OFF and perform step (29)(a) and then (29)(b).

(c) Verify that the following events occur:

1. Tester EVENT light is off.
2. Tester GPWS VAL light is on.
3. Tester G/S light is on.
4. Computer balls are all black.

(d) Connect the DVM (+) lead to ATE 20. The DVM shall indicate +1.180 to +1.968 vdc. Connect the DVM (+) lead to ATE 29. The DVM shall indicate -1.50 to -2.50 vdc.

(e) Connect the DVM (+) lead to ATE 25. Set the SELF TEST switch to OFF. The AURAL light shall remain off. Verify that the DVM indicates -6.0 to -6.4 vdc before continuing.

(30) Front Panel Ground Self Test

(a) Press and hold the computer SELF TEST switch. For models 072, 079; which do not have balls; hold SELF TEST switch for 5 seconds minimum. Two (2) seconds after ball 2 (TERRAIN) turns white, release switch. All computer lights shall come on briefly and computer GPWC OK light shall come on and remain on as long as AURAL light is on.

NOTE: To repeat the test, press the computer WARNING MODE RESET switch to reset balls and verify that DVM (at ATE 25) stabilizes at -6.0 to -6.4 vdc.

(b) All computer balls shall be white. Ignore this step for models 072, 079.

(31) Front Panel System Fault Isolation (Flaps Down)

(a) Set the FLAP switch to FLAP. Momentarily press the computer WARNING MODE RESET switch. All computer balls will turn black. Verify that the DVM (at ATE 25) has stabilized at -6.0 to -6.4 vdc before continuing.

(b) Press and hold the computer SELF TEST switch for 5 seconds minimum. Observe the following conditions:

1. One "glideslope" from speaker.
2. Computer FLAP DN light remains on.
3. Computer ball 2 (TERRAIN) remains black.
4. Computer GPWC OK light off.

Release SELF TEST switch. To repeat the test, perform NOTE for step (30)(a).

(c) Verify the following computer indicators:

1. Ball 1 (HI SINK) is white.
2. Ball 2 (TERRAIN) is black.
3. Ball 3 (TAKE OFF) is black.
4. Ball 4 (GEAR/FLAP) is black.
5. Ball 5 (G/S) is white.

(32) Fault Isolation (Gear Up)

(a) Momentarily press the computer WARNING MODE RESET switch. All computer balls shall be black. Set the FLAP switch to OFF and the GEAR 1 switch to UP. Verify that the DVM (at ATE 25) stabilizes at -6.0 to -6.4 vdc before continuing.

(b) Press and hold the computer SELF TEST switch for 2 seconds after ball 2 (TERRAIN) turns white. For models 072, 079; which do not have balls; hold SELF TEST switch for 5 seconds minimum. Observe the following conditions.

1. No "glideslope" from speaker at beginning of test.
2. Computer GEAR light remains on.
3. Computer ball 2 (TERRAIN) white.
4. GPWC OK light on.

Release SELF TEST switch. To repeat test, perform NOTE for step (30)(a).

(c) Verify the following computer indicators.

1. Balls 1 thru 4 (HI SINK, TERRAIN, TAKE OFF, GEAR/FLAP) white.
2. Ball 5 (G/S) black.

(33) Fault Isolation (Altimeter Failure)

(a) Momentarily press the computer WARNING MODE RESET switch. All balls shall be black. Set the GEAR 1 switch to DN and the R/A switch to $\overline{\text{VAL}}$. Verify that the DVM (at ATE 25) stabilizes at -6.0 to -6.4 vdc before continuing.

(b) Press and hold the computer SELF TEST switch for 2 seconds after ball 2 (TERRAIN) turns white. For models 072, 079; which do not have balls; hold SELF TEST switch for 5 seconds minimum. Observe the following conditions.

1. Computer RADIO ALT light remains on.
2. Computer ball 2 (TERRAIN) white.
3. Computer GPWC OK light off.
4. No output from speaker.

Release SELF TEST switch. To repeat test, perform NOTE for step (30)(a).

(c) Verify the following computer indicators.

1. Balls 1 thru 4 (HI SINK, TERRAIN, TAKE OFF, GEAR/FLAP) white.
2. Ball 5 (G/S) black.

(34) Fault Isolation (Baro Rate Failure)

(a) Momentarily press the computer WARNING MODE RESET switch. All balls shall be black. Set the R/A switch to VAL. For models 071, 072, 073, 079; set the BARO MON switch to OFF. For models 070, 081, 087; set the CADC switch to VAL. For all models, verify that the DVM (at ATE 25) stabilizes at -6.0 to -6.4 vdc before continuing.

(b) Press and hold the computer SELF TEST switch for 2 seconds after ball 2 (TERRAIN) turns white. For models 072, 079; which do not have balls; hold SELF TEST switch for 5 seconds minimum. Observe the following conditions:

1. Computer AIR DATA light remains on.
2. Computer ball 2 (TERRAIN) white.
3. Computer GPWC OK light off.

Release SELF TEST switch. To repeat test, perform NOTE for step (30)(a).

(c) Verify the following computer indicators.

1. Computer ball 1 (HI SINK) black.
2. Computer ball 2 (TERRAIN) white.
3. Computer ball 3 (TAKE OFF) black.
4. Computer ball 4 (GEAR/FLAP) white.
5. Computer ball 5 (G/S) white.

(35) Fault Isolation (GPWC Failure)

(a) Momentarily press the computer WARNING MODE RESET switch. All balls should be black. For models 071, 072, 073, 079; set the BARO MON switch to on. For models 070, 081, 087; set the CADC switch to VAL. For all models, set the SEL switch to B, TEST SIGNAL ON/OFF switch to ON and set TEST SIG dial between 0.0 and 0.2 (numbers on dial). Connect a jumper between ATE 7 and ATE 23. Verify that the DVM (at ATE 25) stabilizes at -6.2 to -7.0 vdc before continuing.

(b) Press and hold the computer SELF TEST switch for 5 seconds and release. The computer GPWC OK light shall be off and ball 2 (TERRAIN) shall remain unchanged.

(c) Verify the following computer indicators:

1. Computer ball 1 (HI SINK) white.
2. Computer ball 2 (TERRAIN) black.
3. Computer ball 3 (TAKE OFF) white.
4. Computer ball 4 (GEAR/FLAP) white.
5. Computer ball 5 (G/S) white.

(36) Fault Isolation (Glideslope Signal Wiring Failure)

(a) Remove jumper between ATE 7 and ATE 23. Set the TEST SIGNAL ON/OFF switch to OFF. Connect the multimeter (+) lead to ATE 17. Press and hold tester G/S UP switch. Press and hold computer SELF TEST switch.

For model 070, the multimeter shall indicate +12 vdc minimum and the computer G/S VAL light shall be off.

For models 071, 072, 073, 079, 081; the multimeter shall indicate +1 vdc maximum and the computer G/S VAL light shall come on.

For model 087, the multimeter shall indicate +12 vdc minimum and the G/S VAL light shall be off.

Release the SELF TEST and G/S UP switches.

(b) For model 070, press and hold the tester G/S DN switch and then the computer SELF TEST switch. The computer G/S VAL light shall be off. Release the SELF TEST and G/S DN switches.

For models 071, 072, 073, 079; press and hold the tester G/S DN switch and then the computer SELF TEST switch. The computer G/S VAL light shall come on. Release the SELF TEST and G/S DN switches.

For model 081, press and hold the tester G/S DN switch and then the computer SELF TEST switch. The computer G/S VAL light shall come on. Release the computer SELF TEST switch. In approximately 5 seconds, the GPWS VAL light shall come on. Release the G/S DN switch.

For model 087, press and hold the tester G/S DN switch and then the computer SELF TEST switch. The computer G/S VAL light shall be off. Release the SELF TEST and G/S DN switches.

NOTE: For model 081, omit steps (36)(c) and (d) and continue from step (36)(e).

(c) For models 070, 071, 072, 073, 079, 087; set the tester SIGNAL switch to EXT and press and hold the computer SELF TEST switch. The computer G/S VAL light shall be off for models 070, 087 and on for models 071, 072, 073, 079. Release the SELF TEST switch and set the SIGNAL switch to NORM.

(d) For model 070, press and hold the tester G/S COM switch. Press and hold the computer SELF TEST switch. The computer G/S VAL light shall be off. Release the SELF TEST and G/S COM switches.

For models 071, 072, 073; press and hold the tester G/S COM switch. Press and hold the computer SELF TEST switch. The computer G/S VAL light shall be on. Release the computer SELF TEST switch. The tester GPWS VAL light shall come on in approximately 5 seconds. Release the G/S COM switch.

For model 079, press and hold the tester G/S COM switch. Press and hold the computer SELF TEST switch. The computer G/S VAL light shall be on. Release the computer SELF TEST switch. The tester GPWS VAL light shall come on in approximately 5 seconds. Release the G/S COM switch.

For model 087, press and hold the tester G/S COM switch. Press and hold the computer SELF TEST switch. The computer G/S VAL light shall be off. Release the SELF TEST and G/S COM switches.

NOTE: For models 070, 087 omit steps (36)(e) and (f) and continue with step (37).

(e) For models 071, 072, 073, 079, 081; momentarily press the computer WARNING MODE RESET switch. All balls should be black. Verify that the DVM (at ATE 25) stabilizes at -6.0 to -6.4 vdc before continuing.

(f) For models 071, 072, 073, 079, 081; press and hold the tester G/S UP switch and the computer SELF TEST switch. Verify that there is no audible word "glideslope" from the speaker. Verify that computer ball 5 (G/S) is black and ball 2 (TERRAIN) is white. In approximately 2 seconds after ball 2 (TERRAIN) turns white, the computer GPWC OK light shall come on. For models 072, 079; in approximately 5 seconds the GPWC OK light shall come on. Release both the SELF TEST and G/S UP switches.

(37) Internal Computer Power Monitor Verification

(a) Simultaneously connect a jumper between ATE 7 and ATE 33 and turn on the stopwatch. Turn off the stopwatch when GPWS VAL light comes on. The time shall be 4.2 to 5.5 seconds.

(b) Remove the jumper from ATE 33 and immediately insert it into ATE 34. Verify that the GPWS VAL light remains on for 5.0 seconds during the jumper switching. The light should remain on indefinitely.

(38) Radio Altimeter Wiring Verification

(a) For all models except models 072, 079; set the R/A switch to VAL. For all models, remove the jumper from ATE 34. Connect the DVM (+) lead to BP-20. Set the RAD INPUT switch to VAR. Decrease the RAD ALT dial until the DVM indicates +2.9 to +3.1 vdc. Computer ball 1 (HI SINK) shall be white.

For models 070, 071, 073, 081, 087 only; computer ball 2 (TERRAIN) shall be white.

(b) For all models except models 072, 079; set the R/A switch to VAL. The computer balls shall all be black.

(c) Set the RAD INPUT switch to RAMP. Decrease the RAD ALT dial until the DVM (at BP-20) indicates +0.19 to +0.21 vdc. Verify that the GPWS VAL light is off and remains off for 7 seconds before continuing.

(d) Decrease the RAD ALT dial until the DVM (at BP-20) indicates +40 to +60 mvdc. After approximately 5 seconds, the GPWS VAL light shall come on.

(e) Increase the RAD ALT dial until the DVM (at BP-20) indicates +0.32 to +0.36 vdc. After approximately 4 seconds, the GPWS VAL light shall go off.

(f) Set the RAD INPUT switch to VAR. Increase the RAD ALT dial until the DVM indicates +2.9 to +3.1 vdc. Set the tester SELF TEST switch to SELF TEST. The multimeter (at ATE 17) shall indicate +1 vdc maximum. Set the SELF TEST switch to OFF.

(39) Auxiliary AC Baro Rate Input

(a) For model 070, set the FUNCT switch to AC, BARO MON switch to OFF, and BARO INPUT switch to VAR. Set the DVM for AC and connect (+) lead to BP-39. Adjust 115 vac power until DVM indicates 25.8 to 26.2 vac. Connect DVM (+) lead to BP-35. Decrease BARO ADJ dial until DVM indicates 0.42 to 0.44 vac. Dial must be below 5.0 in order to obtain an AC voltage out-of-phase with the reference voltage. Set the DVM to DC.

For models 071, 072, 073, 079; set the FUNCT switch to AC, OUTPUT switch to AC-2 and BARO INPUT switch to VAR. Set the DVM for AC and connect (+) lead to BP-39. Adjust 115 vac power for a DVM indication of 25.8 to 26.2 vac. Connect the DVM (+) lead to BP-35. Decrease the BARO ADJ dial until DVM indicates 0.99 to 1.01 vac. Dial must be below 5.0 in order to obtain an AC voltage out-of-phase with the reference voltage. Connect the DVM (+) lead to ATE 29 and set it to DC. The DVM shall indicate -1.031 to -1.265 vdc.

For models 081, 087; set the FUNCT switch to AC, BARO MON switch to OFF, and BARO INPUT switch to VAR. Set the DVM for AC and connect (+) lead to BP-39. Adjust 115 vac power until DVM indicates 25.8 to 26.2 vac. Connect DVM (+) lead to BP-35. Decrease BARO ADJ dial until DVM indicates 0.42 to 0.44 vac. Dial must be below 5.0 in order to obtain an AC voltage out-of-phase with the reference voltage. Set the DVM to DC.

(b) Verify that the AURAL light is on.

(40) Primary Power Monitor Verification

(a) Connect the DVM (+) lead to ATE 1. Decrease the 115 vac input power until the tester 1 light remains off. The DVM shall indicate +13.6 to +17.6 vdc. For models 070, 081, 087; set the BARO MON switch to ON.

(b) Connect the DVM (-) lead to BP-4 and (+) lead to BP-3. Set the DVM for AC. Increase the 115 vac input power until the DVM indicates 114 to 116 vac. Disconnect DVM (+) lead from BP-3. Move DVM (-) lead to ATE 7.

(41) Audio Output Verification

(a) Connect the scope (-) lead to ATE 7 and (+) lead to BP-13. Set scope to trigger internally and DC. Adjust scope as necessary. Measure the maximum peak-to-peak level of tone sweep.

For models 070, 071, 072, 073, 079, 081; it shall be 3.2 to 4.8 volts peak-to-peak.

For model 087, it shall be 1.4 to 2.7 volts peak-to-peak. Allow three audio cycles for volume to automatically reduce before making measurements.

(b) Measure the maximum peak-to-peak voice signal during "pull-up" or for model 079, during "terrain".

For models 070, 071, 072, 073, 079, 081; it shall be 4.6 to 6.9 volts peak-to-peak.

For model 087, it shall be 2.0 to 3.8 volts peak-to-peak.

(c) Measure the time for one tone sweep. The time shall be 290 to 320 milliseconds.

(d) Measure the time for one complete voice message, including two tone sweeps and one "pull-up" or "terrain" (for model 079). The time shall be 1.3 to 1.5 seconds.

(e) Connect the scope (+) lead to BP-17. Measure the maximum peak-to-peak voice signal during "pull-up" or "terrain" (for model 079).

For models 070, 071, 072, 073, 079, 081; it shall be 4.6 to 6.9 volts peak-to-peak.

For model 087, it shall be 2.0 to 3.8 volts peak-to-peak.

(f) Connect the scope (+) lead to BP-15. Measure the maximum peak-to-peak level of tone sweep.

For model 070, set the LOAD switch to OFF. The peak-to-peak voltage shall be 18.5 to 31.0.

For models 071, 072, 073, 079, 081; it shall be 17.6 to 26.4 volts peak-to-peak.

For model 087, it shall be 7.9 to 14.5 volts peak-to-peak. Note that measurement is made at the reduced volume level.

(g) Set the LOAD switch to OFF. Connect the scope (+) lead to TP-33. Measure the maximum peak-to-peak level of tone sweep.

For models 071, 072, 073, 079, 081; it shall be 8.8 to 13.2 volts peak-to-peak for all models, except model 070 which shall be 9.25 to 15.5 volts peak-to-peak.

For model 087, it shall be 3.9 to 7.3 volts peak-to-peak. Note that measurement is made at the reduced volume level.

(h) For model 070, connect an 8 ohm, 5%, 2 watt resistor across BP-14 and TP-33. Measure the maximum peak-to-peak level during "pull-up". It shall be 16.0 to 18.0 volts peak-to-peak.

For models 071, 072, 073, 079, 081; set the LOAD switch to LOAD. Measure the maximum peak-to-peak level of the tone sweep. It shall be 6.3 to 11.8 volts peak to peak.

For model 087, set the LOAD switch to LOAD. Measure the maximum peak-to-peak level of the tone sweep. It shall be 2.8 to 7.2 volts peak-to-peak. Note that measurement is made at the reduced volume level.

(i) For model 070, set the AUDIO switch to AUDIO after the first "whoop" of an audio cycle. Observe that the scope audio level reduces after two (2) more "whoop-whoop, pull-up" cycles. Measure the maximum peak-to-peak voice level during "pull-up". It shall be 9.5 to 11.5 volts peak-to-peak. Remove the 8 ohm resistor and set the LOAD switch to LOAD.

For models 071, 072, 073; set the AUDIO switch to AUDIO after the first "whoop" of an audio cycle. Observe that the scope audio level reduces after two (2) more "whoop-whoop, pull-up" cycles. Measure the maximum tone level. It shall be 2.3 to 6.5 volts peak-to-peak.

For model 079, set the AUDIO switch to AUDIO after the first "whoop" of an audio cycle. Observe that the scope audio level reduces after two (2) more "whoop whoop, terrain" cycles. Measure the maximum tone level. It shall be 2.3 to 6.5 volts peak-to-peak.

For model 081, set the AUDIO switch to AUDIO after the first "whoop" of an audio cycle. Observe that the scope audio level reduces after two (2) more "whoop whoop, pull-up" cycles. Measure the maximum tone level. It shall be 2.3 to 6.5 volts peak-to-peak.

For model 087, set the CADC switch to $\overline{\text{VAL}}$ until the tester output lights go off and then return it to VAL. Observe the maximum tone level during first three audio cycles before volume automatically reduces. It shall be 5.7 to 14.4 volts peak-to-peak. There will be approximately 3 seconds delay before audio starts after placing CADC to VAL.

(42) Flashing Output Lamp Verification

(a) Connect scope (+) lead to TP-13. Observe scope for one complete on, off (OV, +28V) cycle. It shall be 0.7 to 1.5 seconds.

(b) Observe scope for time of lamp 3 on (0 VDC) duty cycle. It shall be 0.4 to 0.9 seconds.

(c) For model 073 only, set the EXC switch to OFF. The AURAL light shall go off. Set the EXC switch to EXC. In approximately 3 seconds the AURAL shall come on.

(43) Self Test Inhibit Verification

(a) Set the BARO INPUT switch to GND, RAD INPUT to FIXED, and INH GND to INH GND.

(b) Connect DVM (-) lead to ATE 7 and (+) lead to ATE 25. Verify that the DVM stabilizes at -6.0 to -6.4 vdc before continuing.

(c) Connect the multimeter (+) lead to ATE 14. Set the SELF TEST switch to SELF TEST. In approximately 2 seconds, the multimeter shall switch to +1 vdc maximum.

(d) For models 070, 071, 072, 073, 079, 081; verify that the AURAL light remains off when the multimeter is at +1 vdc maximum.

For model 087; verify that the AURAL light comes on after the multimeter switches to +1 vdc maximum. Note that the speaker output shall be "glideslope" at the beginning of self test followed by "whoop whoop, pull-up" sequences after the AURAL light comes on.

(e) For models 070, 071, 072, 073, 079, 081; wait for the multimeter (at ATE 14) to switch to +12 vdc minimum (approximately 5 seconds) before continuing. Set the INH GND switch to OFF. After a noticeable delay of approximately three seconds, the speaker shall produce the word "glideslope".

For model 087, wait for the multimeter (at ATE-14) to switch to +12 vdc minimum (approximately 5 seconds) before continuing. Set the INH GND switch to OFF. There shall be no speaker output within five seconds of setting INH GND switch to OFF.

(f) For model 070, set the SELF TEST switch to OFF and wait for GPWS VAL light to go off before proceeding. Connect DVM (+) lead to TP-38. The DVM shall indicate -0.1 to +1.0 vdc. Set the DVM to measure ohms. The DVM shall indicate 0.0 to 3.0 ohms.

(44) For model 073 only, Synchro Demodulator Tests.

(a) Set SELF TEST switch to OFF. Set the synchro dial to 0.0 ± 0.1 degrees. Connect DVM (+) lead to ATE 51. The DVM shall indicate 0 ± 60 mvdc. Note the DVM indication.

(b) Set the synchro dial to 315.0 ± 0.1 degrees. The DVM (at ATE 51) shall indicate +6.610 to +6.890 vdc more positive than that noted in step (a). Note the DVM indication.

(c) Set the synchro dial to 330.0 ± 0.1 degrees. The DVM (at ATE 51) shall indicate -2.16 to -2.34 vdc less positive than that noted in step (b).

(d) Set the synchro dial to 45.0 ± 0.1 degrees. The DVM (at ATE 51) shall indicate -6.645 to -6.885 vdc more negative than that noted in step (a).

(e) Slowly lower 115 vac power source to approximately 90 to 95 vac and return to 115 vac while monitoring the DVM (at ATE 51). The maximum change shall be within -30 to +30 mvdc.

(f) Set the synchro dial to 180.0 ± 0.1 degrees. The DVM shall be 0 ± 60 mvdc. Note the DVM indication.

(g) Set the synchro dial to 135.0 ± 0.1 degrees. The DVM (at ATE 51) shall indicate +6.610 to +6.890 vdc more positive than that noted in step (f).

(h) Set the synchro dial to 225.0 ± 0.1 degrees. The DVM (at ATE 51) shall indicate -6.645 to -6.855 vdc more negative than that noted in step (f). Note the DVM indication.

(i) Set the synchro dial to 210.0 ± 0.1 degrees. The DVM (at ATE 51) shall indicate +2.16 to +2.34 vdc more positive (less negative) than that noted in step (h).

(j) Connect the DVM (+) lead to ATE 52. Set the synchro dial to 90.0 ± 0.1 degrees. The DVM shall indicate 0 ± 60 mvdc. Note the DVM indication.

(k) Set the synchro dial to 45.0 ± 0.1 degrees. The DVM (at ATE 52) shall indicate +6.610 to +6.890 vdc more positive than that noted in step (j).

(l) Set the synchro dial to 135.0 ± 0.1 degrees. The DVM (at ATE 52) shall indicate -6.645 to -6.855 vdc more negative than that noted in step (j). Note the DVM indication.

(m) Set the synchro dial to 120.0 ± 0.1 degrees. The DVM (at ATE 52) shall indicate +2.16 to +2.34 vdc more positive (less negative) than that noted in step (44)(1).

(n) Set the synchro dial to 270.0 ± 0.1 degrees. The DVM (at ATE 52) shall indicate 0 ± 60 mvdc. Note the DVM indication.

(o) Set the synchro dial to 225.0 ± 0.1 degrees. The DVM (at ATE 52) shall indicate +6.610 to +6.890 vdc more positive than that noted in step (n). Note the DVM indication.

(p) Set the synchro dial to 240.0 ± 0.1 degrees. The DVM (at ATE 52) shall indicate -2.16 to -2.34 vdc less positive than that recorded in step (o).

(q) Set the synchro dial to 315.0 ± 0.1 degrees. The DVM (at ATE 52) shall indicate -6.645 to -6.855 vdc more negative than that noted in step (n).

(r) Slowly lower the 115 vac power source to approximately 90 to 95 vac and return to 115 vac while monitoring the DVM (at ATE 52). The maximum change shall be within -30 to +30 mvdc.

(s) Set the synchro dial to 0.0 ± 0.1 degrees. Set the KIFIS switch to KIFIS. Connect the DVM (+) lead to TP-36. The DVM shall indicate 0 ± 6 mvdc.

(t) Set the RAMP switch to RAMP. The DVM shall indicate +1.425 to +1.575 vdc.

(u) Set the EIN switch to A. The DVM shall indicate -1.425 to -1.575 vdc.

(v) Set the RAMP switch to OFF. Set the synchro dial to 90.0 ± 0.1 degrees. Set the RAMP switch to RAMP. The DVM shall indicate -1.425 to -1.575 vdc.

(w) Set the EIN switch to $\overline{A}$. The DVM shall indicate +1.425 to +1.575 vdc.

(x) Set the KIFIS switch to OFF. The DVM shall indicate +0.407 to +0.444 vdc.

(y) Set the EIN switch to A. The DVM shall indicate -0.407 to -0.444 vdc.

(z) Set the RAMP switch to OFF and KIFIS switch to KIFIS. Rotate synchro dial clockwise just fast enough for circuit to limit and observe DVM. Verify that DVM indicates from +10.0 to +11.0 vdc throughout one revolution of the synchro dial.

(aa) Rotate synchro dial counterclockwise just fast enough for circuit to limit and observe DVM. Verify that DVM indicates from -10.0 to -11.0 vdc throughout one revolution of the synchro dial.

(ab) Connect scope (-) lead to ATE 7 and (+) lead to ATE 52. Rotate synchro dial clockwise just fast enough to maintain a scope display of +3 to +7 vdc. Continue through one full revolution and observe display for no discontinuities or other abnormalities.

(ac) Set the synchro dial for 0.0 ± 0.1 degrees. Set scope for single sweep, line trigger, 0.2 vdc per division, and 1.0 second sweep. Simultaneously set RAMP switch to RAMP and press scope reset to begin one sweep. The sweep time shall be 0.25 to 0.65 seconds to reach -1.0 vdc.

(ad) Set RAMP switch to OFF. Set synchro dial to 90.0 ± 0.1 degrees. Simultaneously set RAMP switch to RAMP and press scope reset to begin one sweep. The sweep time shall be 0.25 to 0.65 seconds to reach -1.0 vdc.

(45) Set the tester PWR switch to OFF and disconnect computer from test setup.

F. Calibration Procedure

(1) Voice Warning Assembly (A4) or (A4A1) Calibration Procedure.

NOTE: A4A1 is used on model 073 only.

(a) Remove screw (Ref. 10, IPL Fig. 1), loosen stud (25), and remove cover (5) from GPWC.

(b) Set the tester controls in accordance with step 2C(1).

(c) Connect the GPWC, tester, and power source as shown in Fig. 101. Test setup is identical to GPWC functional test setup.

(d) Adjust the 115 vac, 400 Hz, power source for 115 ± 1 vac.

(e) Set the tester GAIN switch to HI. Connect the DVM (-) lead to ATE 7 and the (+) lead to ATE 3. Set the tester PWR switch to PWR. The DVM, set at DC, shall indicate +5.0 ± 0.3 vdc.

(f) Connect the DVM (+) lead to ATE 2. The DVM shall indicate +15.0 ± 0.2 vdc.

(g) Connect the DVM (+) lead to ATE 5. The DVM shall indicate -15.0 ± 0.2 vdc.

(h) Connect the DVM (+) lead to ATE 4. The DVM shall indicate -12.0 ± 0.3 vdc.

(i) Connect the oscilloscope (-) lead to ATE 7. Set the RAD INPUT switch to VAR and adjust the RAD ALT dial to 6.0 ± 0.1 (number on dial). Set the BARO INPUT switch to VAR and adjust the BARO ADJ dial to 3.0 ± 0.1 (numbers on dial).

(j) Connect the scope (+) lead to ATE 45. Set the time base at 50 or 20 microseconds per division triggerable on negative going 5 volt pulses. Observe that the clock pulses are occurring at two different repetition rates in alternate bursts.

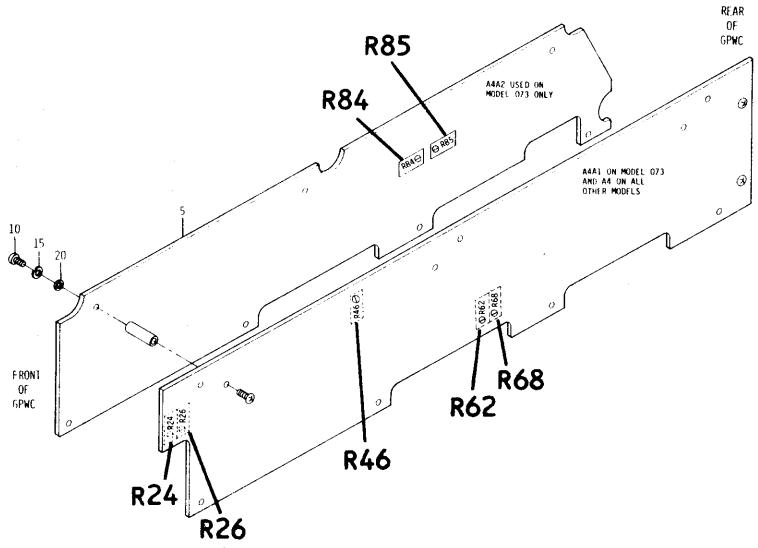

Calibration Resistor Location (A4, A4A1, A4A2)
Figure 103

(k) The slow speed clock counter indication shall be 154 ± 2 microseconds. If not, adjust A4R26, with a small flat blade screwdriver, for an indication of 154 ± 2 microseconds (Ref. Fig. 103 for location).

NOTE: If model 073 is being calibrated adjust A4A1R26.

(l) The high speed clock counter indication shall be 130 ± 2 microseconds. If not, adjust A4R24, with a small flat blade screwdriver, for an indication of 130 ± 2 microseconds (Ref. Fig. 103 for location).

NOTE: If model 073 is being calibrated adjust A4A1R24.

(m) Install the following jumpers.

ATE 42 to TP-26

ATE 46 to ATE 47

ATE 47 to ATE 48

ATE 48 to ATE 49

(n) Connect the signal generator (-) lead to ATE 7 and pulse output lead to ATE 46. Adjust the signal generator for 0 to 5 vdc pulses at 20% duty cycle maximum. Set the generator to 20 Hz (may be adjusted to facilitate triggering). Set the scope time base at 10 milliseconds per division. Observe the time between clock bursts on the scope.

(o) The time between clock bursts as observed on the scope shall be 25 ± 3 milliseconds. If not, adjust A4R46, with a small flat blade screwdriver, for 25 ± 3 milliseconds (Ref. Fig. 103 for location).

NOTE: If model 073 is being calibrated adjust A4A1R46.

(p) Disconnect the jumpers installed in step (m).

NOTE: If model 070 is being calibrated omit steps (q) through (y) and perform paragraph 2F(5).

NOTE: On model 087 perform the Audio Assembly (A3) calibration per paragraph 2F(3) before performing steps (q) through (w) and (y).

(q) Connect scope (-) lead to BP-14 and (+) lead to BP-13. Observe the scope during the "whoop-whoop" portion of the signal. Adjust VOLUME control as necessary. Note the peak-to-peak voltage.

On model 087, the audio level automatically reduces after three (3) warning cycles. When calibrating model 087, set BARO INPUT switch to GND, wait until voice message stops, and set BARO INPUT to VAR. Note the peak-to-peak voltage during the first three warning cycles.

(r) Install a jumper between TP-26 and TP-27. On model 087, the jumper is not required.

(s) After three warning cycles, observe the scope during the "whoop-whoop" portion of the signal. The scope peak-to-peak indication shall be 1/2 ± 10% of that noted in step (q). If not, adjust A4R62, with a small flat blade screwdriver, for the specified indication (Ref. Fig. 103 for location).

NOTE: If model 073 is being calibrated, disassemble per step (x) and adjust A4A1R62.

(t) Remove the jumper between TP-26 and TP-27. Set the BARO INPUT switch to GND. Adjust the GS ADJ dial to 2.0 ± 0.1 (numbers on dial).

(u) Set the FLAPS 1 and 2 switches to DN, INH 1 and 2 switches to FRONT, and GEAR 1 switch to DN.

(v) Set the RAD ALT dial to 0.7 ± 0.1 (numbers on dial). Observe the scope signal. Note the peak-to-peak voltage during the "glideslope" voice.

(w) Set the RAD ALT dial to 2.0 ± 0.1 (numbers on dial). The scope peak-to-peak indication shall be 1/2 ± 10% of that noted in step (v). If not, adjust A4R68, with a flat blade screwdriver, for the specified indication. (Ref. Fig. 103 for location).

NOTE: If model 073 is being calibrated, disassemble per step (x) and adjust A4A1R68.

(x) Model 073 disassembly instructions.

CAUTION: WHEN SCREWS ARE REMOVED, THE A4A2 BOARD IS SUPPORTED BY WIRES ONLY AND MUST BE HANDLED VERY CAREFULLY TO PREVENT WIRE DAMAGE.

1. Remove 7 screws (10), 7 washers (15 and 20), and swing A4A2 up such that A4A1R62 and A4A1R68 variable resistors are accessible (Ref. Fig. 103 for location).

2. After the adjustments are made per steps (s) and/or (w) repeat the appropriate steps to verify. Reassemble A4A2 to A4A1 and secure with 7 washers (20), 7 lockwashers (15), and 7 screws (10).

(y) Set the tester PWR switch to OFF, replace cover (Ref. 5, IPL Fig. 1) and secure with screw (10) and stud (25). Perform complete functional test per paragraph 2A through 2E.

(2) For model 073 only, Synchro Demodulator Assembly (A4A2) Calibration Procedure.

(a) Remove screw (Ref. 10, IPL Fig. 1), loosen stud (25), and remove cover (5) from GPWC.

(b) Set the tester controls in accordance with step 2C(1).

(c) Connect the GPWC, tester, and power source as shown in Fig. 101. Test setup is identical to GPWC functional test setup.

(d) Adjust the 115 vac, 400 Hz, power source for 115 ± 1 vac.

(e) Set the tester PWR switch to PWR. Set the EXC switch to EXC and adjust the synchro dial to 90.0^{o}.

(f) Set the DVM to DC and connect the (-) lead to ATE 7 and (+) lead to ATE 52. The DVM shall indicate 0.0 ± 0.060 vdc. Note the actual indication.

(g) Adjust the synchro dial 135°. The DVM shall indicate within -6.75 + (Indication noted in step (f)) ± 0.01 vdc. If DVM indication is in tolerance, perform steps (h) and (i); if out-of-tolerance, perform steps (j) through (l).

(h) Adjust the synchro dial to 0°. Connect the DVM (+) lead to ATE 51. The DVM shall indicate 0.0 ± 0.060 vdc. Note the actual indication.

(i) Adjust the synchro dial to 45°. The DVM shall indicate within -6.75 + (indication noted in step (h) ± 0.01 vdc. If DVM indication is out-of-tolerance perform steps (j) through (l).

CAUTION: WHEN SCREWS ARE REMOVED IN STEP (j), THE A4A2 BOARD IS SUPPORTED BY WIRES ONLY AND MUST BE HANDLED VERY CAREFULLY TO PREVENT WIRE DAMAGE.

(j) Remove 7 screws (10), 7 washers (15 and 20), and swing A4A2 down such that A4A2R84 and A4A2R85 variable resistors are accessible (Ref. Fig. 102 for location).

(k) If step (g) was out-of-tolerance, adjust A4A2R84, with a small flat blade screwdriver, until DVM indication is in tolerance. If step (i) was out-of-tolerance, adjust A4A2R85, with a small flat blade screwdriver, until DVM indication is in tolerance.

(l) Once adjustments are made, repeat steps (e) through (i). Reassemble A4A2 to A4A1 and secure with 7 washers (20), 7 lock washers (15), and 7 screws (10).

(m) Set the tester PWR switch to OFF, replace cover (Ref. 5, IPL Fig. 1) and secure with screw (10) and stud (25). Perform complete functional test per paragraph 2A through 2E.

(3) Audio Assembly (A3) Calibration Procedure.

(a) Remove screw (Ref. 10, IPL Fig. 1), loosen stud (25), and remove cover (5) from GPWC.

(b) Remove 4 top screws (60) which secure the A1 assembly to the chassis and swing board down so that the A3 assembly circuitry is accessible.

(c) Set the tester controls in accordance with step 2C(1).

(d) Connect the GPWC, tester, and power source as shown in Fig. 101. Test setup is identical to GPWC functional test setup.

(e) Adjust the 115 vac, 400 Hz power source for 115 ± 1 vac.

(f) Connect the scope (-) lead to ATE 7. Set the RAD ALT and BARO ADJ dials to 2.0 ± 0.1 (number on dial). Set the RAD INPUT and BARO INPUT switches to VAR. Set the tester PWR switch to PWR.

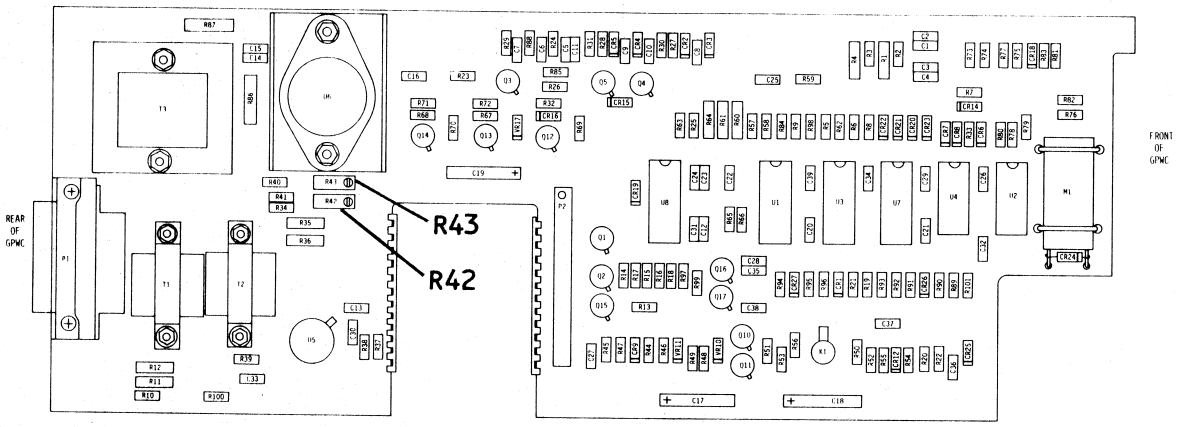

Calibration Resistor Location (A3)
Figure 104

(g) Connect the scope (+) lead to BP-13 and measure the maximum peak-to-peak voice signal during "pull-up" or "terrain" (for model 079). It shall be 4.6 to 6.9 volts peak-to-peak for all models, except model 087. Model 087 shall be 2.0 to 3.8 volts peak-to-peak. If not, adjust A3R42, with a small flat blade screwdriver, until the peak-to-peak voltage during "pull-up" or "terrain" is 5.75 ± 0.5 volts for all models, except model 087. For model 087, adjust A3R42 for a peak-to-peak voltage of 2.9 ± 0.5 volts (Ref. Fig. 104 for location).

NOTE: On model 087, the audio level automatically reduces after three (3) warning cycles. When measuring and calibrating model 087, the peak-to-peak voltage must be adjusted during the first three warning cycles. The warning cycles may be repeated by setting the BARO INPUT switch to GND, waiting until the voice signal stops, and setting the BARO INPUT to VAR.

(h) Connect the scope (+) lead to BP-17 and measure the maximum peak-to-peak voltage signal during "pull-up" or "terrain" (for model 079). It shall be 4.6 to 6.9 volts peak-to-peak for all models, except model 087. Model 087 shall be 2.0 to 3.8 volts peak-to-peak. If not, adjust A3R42, with a small flat blade screwdriver, until the peak-to-peak voltage during "pull-up" or "terrain" is 5.75 ± 0.50 volts for all models, except model 087. For model 087, adjust A3R42 for a peak-to-peak voltage of 2.9 ± 0.5 volts. The criteria of step (g) NOTE applies to model 087 (Ref. Fig. 104 for location).

(i) Repeat steps (g) and (h) while adjusting A3R42 until the criteria of both steps are met.

NOTE: If model 070 is being calibrated, omit steps (j) and (k) and perform para. 2F(5).

(j) Connect the scope (+) lead to BP-15. Measure the maximum peak-to-peak level of the tone sweep. It shall be 17.6 to 26.4 volts peak-to-peak for all models, except model 087. For model 087, it shall be 7.9 to 14.5 volts peak-to-peak. Observe the criteria of step (g) NOTE for model 087. If not, adjust A3R43, with a small flat blade screwdriver, until the peak-to-peak voltage during the tone sweep is 22 ± 2 volts for all models, except model 087. For model 087, adjust A3R43 until the peak-to-peak voltage during the tone sweep is 11.2 ± 1.5 volts (Ref. Fig. 104 for location).

(k) Set the tester PWR switch to OFF, swing A1 board into place and secure with four screws (Ref. 60, IPL Fig. 1). Replace cover (5) and secure with screw (10) and stud (25). Perform complete functional test per paragraph 2A through 2E.

(4) Power Supply Assembly (A1) Calibration Procedure

(a) Remove screw (Ref. 10, IPL Fig. 1), loosen stud (25), and remove cover (5) from GPWC.

(b) Remove 4 top screws (60) which secure the A1 assembly to the chassis and swing board down so that the A1 circuitry is accessible.

(c) Set the tester controls in accordance with step 2C(1).

(d) Connect the GPWC, tester, and power source as shown in Fig. 101. Test setup is identical to GPWC functional test setup.

(e) Adjust the 115 vac, 400 Hz, power source for 115 ± 1 vac.

(f) Set the tester PWR switch to PWR. Connect the DVM, set to AC, (-) lead to BP-4 and (+) lead to BP-3. Slowly decrease the 115 vac power source for a DVM indication of 80 to 85 vac.

(g) Connect the DVM, set to DC, (-) lead to ATE 7 and (+) lead to ATE 2. Verify that the DVM indicates +13 to +17 vdc.

(h) Connect the DVM (+) lead to ATE 5. Verify that the DVM indicates -13 to -17 vdc.

(i) Set the DVM to AC. Connect the DVM (-) lead to BP-4 and (+) lead to BP-3. Adjust the 115 vac power source for 115 ± 1 vac.

(j) Connect the DVM, set to DC, (-) lead to ATE 7 and (+) lead to ATE 2. The DVM shall indicate +15.000 ± 0.005 vdc. If not, adjust A1R73 for +15.000 ± 0.005 vdc (Ref. Fig. 105 for location).

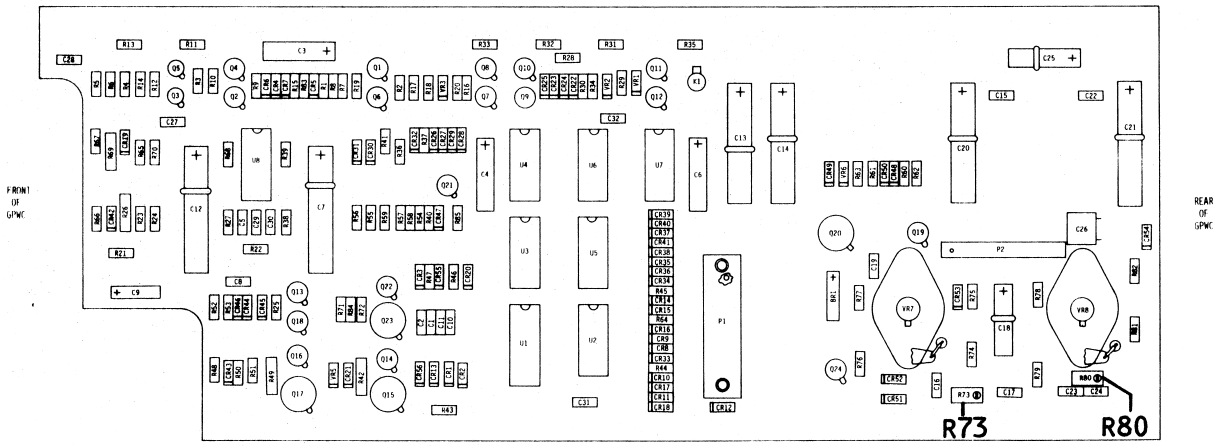

Calibration Resistor Location (A1)
Figure 105

(k) Connect the DVM (+) lead to ATE 5. The DVM shall indicate -15.000 ± 0.005 vdc. If not, adjust A1R80 for -15.000 ± 0.005 vdc (Ref. Fig. 105 for location).

(l) Set the tester PWR switch to OFF and swing A1 board into place and secure with four screws (Ref. 60, IPL Fig. 1). Replace cover (5) and secure with screw (10) and stud (25). Perform complete functional test per paragraph 2A through 2E.

(5) For model 070 only, Voice Warning Assembly (A4R62 and A4R68) and Audio Assembly (A3R43) Resistors Calibration.

(a) Remove screw (Ref. 10, IPL Fig. 1) loosen stud (25), and remove cover (5) from GPWC.

(b) Remove 4 top screws (60) which secure the A1 assembly to the chassis and swing board down so that the A3 assembly circuitry is accessible.

(c) Set the tester controls in accordance with step 2C(1).

(d) Connect the GPWC, tester, and power source as shown in Fig. 101. Test setup is identical to GPWC functional test setup.

(e) Adjust the 115 vac, 400 Hz power source for 115 ± 1 vac. Set the tester PWR switch to PWR.

(f) Connect the scope (-) lead to ATE 7 and (+) lead to TP-33. Set the RAD INPUT switch to VAR and adjust the RAD ALT dial to 6.0 ± 0.1 (number on dial). Set the BARO INPUT switch to VAR and adjust the BARO ADJ dial to 3.0 ± 0.1 (number on dial).

(g) Set LOAD switch to OFF and connect an 8 ohm, 5%, 2 watt resistor across BP-14 and TP-33. Set the GAIN switch to HI. Measure the maximum peak-to-peak voltage during the word "pull-up". It shall be 17.00 ± 0.25. If not, adjust A3R43 with a small flat blade screwdriver, for 17.00 ± 0.25 volts peak-to-peak during a "pull-up" work (Ref. Fig. 104 for location).

(h) Set the AUDIO switch to AUDIO. Measure, after three warning cycles have occurred, the maximum peak-to-peak voltage during the word "pull-up". It shall be 10.5 ± 0.25. If not, adjust A4R62 with a small flatblade screwdriver, for 10.5 ± 0.25 volts peak-to-peak during a "pull-up" word (Ref. Fig. 103 for location).

(i) Set the GS ADJ and RAD ALT dials to 2.0 ± 0.1 (numbers on dial). Set the FLAPS 1 and 2 switches to DN. Set the INH 1 and 2 switches to FRONT. Set the BARO INPUT switch to GND and the GEAR 1 switch to DN.

(j) Measure the maximum peak-to-peak voltage during the word "glideslope". It shall be 10.5 ± 0.25. If not, adjust A4R68, with a small flatblade screwdriver, for 10.5 ± 0.25 volts peak-to-peak during a "glideslope" word (Ref. Fig. 103 for location).

(k) Set the tester PWR switch to OFF and swing A1 into place and secure with four screws (Ref. 60, IPL Fig. 1). Replace cover (5) and secure with screw (10) and stud (25). Perform complete functional test per paragraphs 2A through 2E.

(6) For Model 087 only, Turbo-Prop Printed Wiring Assembly (A2A1) Calibration

(a) Remove screw (Ref. 10, IPL Fig. 1), loosen stud (25), and remove cover (5) from GPWC.

(b) Remove 4 top screws (70) which secure the A2 assembly (65) to the chassis and swing board down so that A2A1 assembly is visible.

(c) Set the tester controls in accordance with step 2C(1).

(d) Connect the GPWC, tester, and power source as shown in Fig. 101. Test setup is identical to GPWC functional test setup.

(e) Adjust the 115 vac, 400 Hz power source for 115 ± 1 vac.

(f) Connect the DVM (-) lead to ATE 7 and (+) lead to BP-28. Connect the multimeter (-) lead to ATE-7 and (+) lead to ATE 12.

(g) Set the following tester controls as listed.

MODE 4 switch to MODE 4
FLAPS 1 switch to DN
FLAPS 2 switch to DN
GEAR 1 switch to DN
RAD INPUT to VAR
BARO INPUT to VAR

(h) Set tester PWR switch to PWR.

(i) Decrease the BARO ADJ dial for a DVM (at BP-28) indication of -0.724 to -0.726 vdc. The multimeter (at ATE-12) shall switch to +12 vdc minimum. Set the ACREF switch to LO.

(j) Connect the DVM (+) lead to BP-20. Increase the RAD ALT dial until the multimeter (at ATE 12) switches to +1 vdc maximum. Decrease the RAD ALT dial until the multimeter switches to +12 vdc minimum. The DVM shall indicate +5.38 to +6.00 vdc.

(k) Connect the DVM (+) lead to BP-28. Decrease the BARO ADJ dial until the DVM indicates -0.899 to -0.901 vdc. Connect the DVM (+) lead to BP-20. Increase the RAD ALT dial until the multimeter (at ATE 12) switches to +1 vdc maximum. Decrease the RAD ALT dial until the multimeter switches to +12 vdc minimum. The DVM shall indicate +9.30 to +10.50 vdc.

(l) If steps (j) or (k) are out of tolerance reselect A2A1R8 and A2A1R10 as follows:

1. Set tester PWR switch to OFF.

2. Remove screws (Ref. 515, IPL Fig. 3) and washers (525) and carefully arrange A2A1 so that components are accessible.

3. Unsolder and remove resistors A2A1R8 and A2A1R10 and substitute a decade resistance box for each. Set R8 decade to 12.7K and R10 decade to 11.3K. (Ref. Fig. 106 for location).

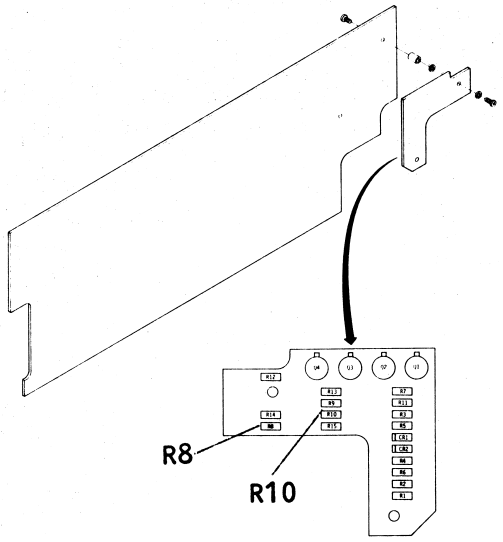

Calibration Resistor Location (R8, R10)
Figure 106

4. Set the PWR switch to PWR and the ACREF switch HI and repeat steps (i), (j), and (k) while adjusting R8 and R10 decades for in tolerance condition.

NOTE: Use Figure 107 mode 4 calibration curves to assist in performance of the calibration. R8 changes both readings approximately the same amount, while R10 twists the nominal values. Note that a 10 millivolt DC change in the BARO setting will change the radio trip level 242 millivolts.

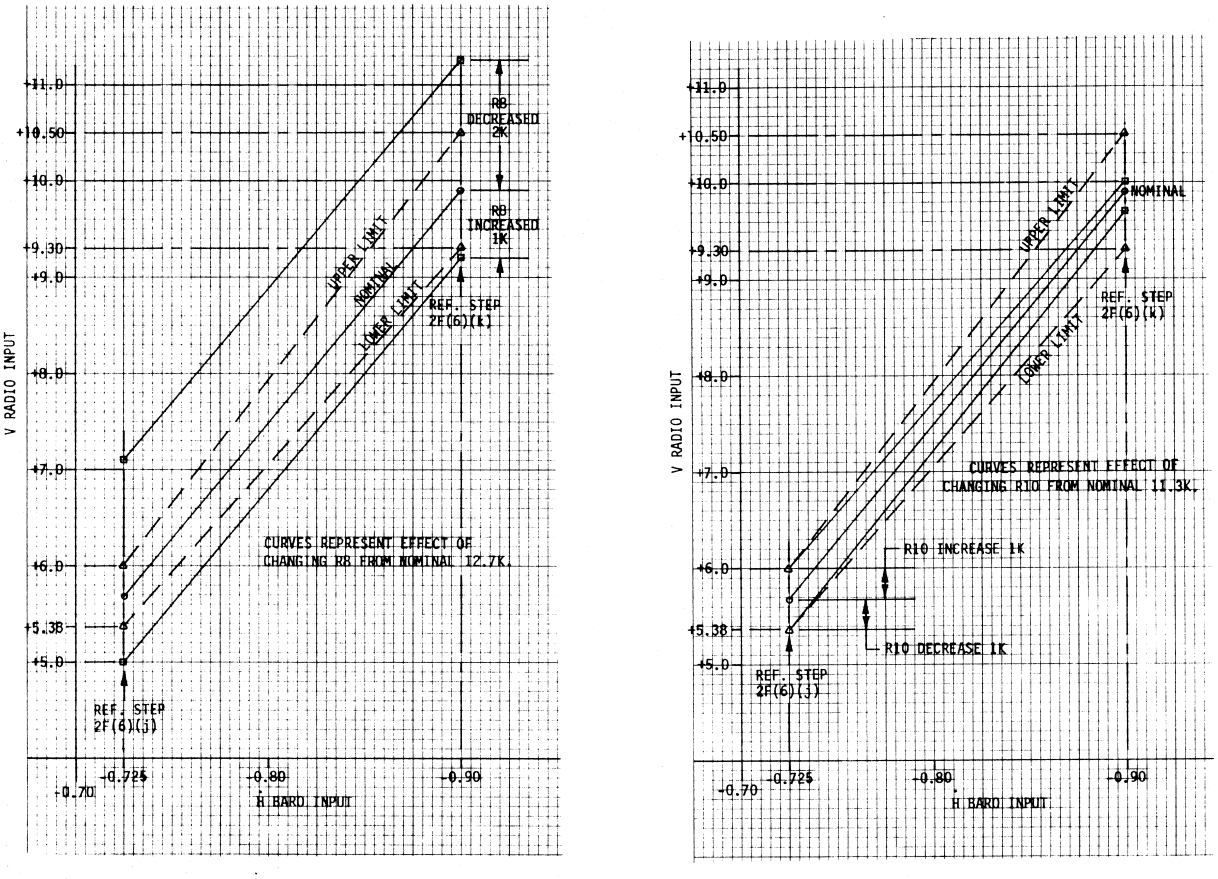

Mode 4 Calibration Curves
Figure 107

5. Set the PWR switch to OFF. Remove the R8 and R10 decade boxes and install resistors for R8 and R10 closest in

value to the decade (Ref. 595, IPL Fig. 3 for resistor range).

6. Set the ACREF switch to HI and repeat steps (h) through (k). Set the PWR switch to OFF.

(m) Reinstall the A2A1 board and secure with screws (Ref. 515, IPL Fig. 3) and washers (525). Swing the A2 assembly (Ref. 65, IPL Fig. 1) back into place and secure with four screws (70). Replace cover (5) and secure with screw (10) and stud (25). Perform complete functional test per paragraphs 2A through 2E.

G. Troubleshooting

Troubleshooting procedures (Ref. Fig. 108) indicate the most probable trouble areas for various malfunctions, their probable cause and correction.

TEST STEP	TROUBLE	PROBABLE CAUSE	CORRECTION
2.D.	Code Resistor Verification Test		
(2)(a)	Resistance out of tolerance.	See below.	
	Perform test step (2)(b) and proceed as noted below.		
	Resistance out of tolerance in test steps (2)(a) and (2)(b).	Wire from J2-7 to A9-5 is broken.	Replace.
	Resistance out of tolerance in step (2)(a) but in tolerance in step (2)(b).	(a) Wire from J2-101 to A9-10 is broken.	Replace.
		(b) A9R2 defective.	Replace.
(2)(b)	Resistance out of tolerance.	(a) Wire from J2-102 to A9-9 is broken.	Replace.
		(b) A9R1 defective.	Replace.
(2)(c)	Resistance out of tolerance.	(a) Wire from J2-103 to A9-11 is broken.	Replace.
		(b) A9R3 defective.	Replace.
(2)(d)	Resistance out of tolerance.	(a) Wire from J2-104 to A9-12 is broken.	Replace.
		(b) A9R6 defective.	Replace.
(2)(e)	Resistance out of tolerance.	(a) Wire from J2-106 to A9-14 is broken.	Replace.
		(b) A9R4 defective.	Replace.
(2)(f)	Resistance out of tolerance.	(a) Wire from J2-105 to A9-13 is broken.	Replace.
		(b) Incorrect Mod resistor (A9R5) installed.	Verify correct Mod, on front panel and install correct resistor (A9R5)
		(c) A9R5 defective.	Replace.

TEST STEP	TROUBLE	PROBABLE CAUSE	CORRECTION
2.E.(1)	Initial Voltage Conditions		
(c)1.	+24 vdc power is high.	T1 defective.	Replace.
	+24 vdc power is low.	See below	
	Measure voltage at ATE 2, voltage shall be +15.0±0.1 vdc - Proceed as noted below.		
	+24 vdc power is low and +15 vdc power is in tolerance.	(a) Power supply - T1, A1C13,A1C14,A1BR1 defective.	Replace.
		(b) Wire from T1-3 to J3-WW, T1-5 to J3-ZZ is broken.	Replace.
	+24 vdc and +15 vdc power is low.	(a) Short on +24 vdc or +15 vdc buss.	Isolate and remove short by unplugging plug in assemblies one at a time.
		(b) Wire from A9-15 to J3-A is broken.	Replace.
	+24 vdc power is zero and +15 vdc power is in tolerance.	Wire from J2-1 to J2-1 to J1A-30 to K1-7 to J4-3 is broken.	Replace.
	+24 vdc and +15 vdc power is zero.	(a) T1 defective.	Replace.
		(b) Wire from J1B-3 to T1-1,J1B-4 to T1-2 is broken.	Replace.
(c)2.	+15 vdc power is high.	(a) A8Q2 defective.	Replace.
		(b) A1VR7 out of calibration.	Calibrate per para. 2.F.(4).
	+15 vdc power low but not zero.	(a) Wire from J4-3 to A8Q2-C is broken.	Replace.
		(b) A1VR7 out of calibration.	Calibrate per para. 2.F.(4).

TEST STEP	TROUBLE	PROBABLE CAUSE	CORRECTION
2.E.(1)	Initial Voltage Conditions (cont'd)		
(c)2. (cont'd)	+15 vdc power is zero.	Wire from J2-2 to J4-4 is broken.	Replace.
	+15 vdc power is negative.	(a) Wire from J3-H to A8Q2-B,J3-C to A8Q2-E,J9-4 to VR1-case,J8-4 to J4-1 is broken.	Replace.
		(b) A1VR7 defective.	Replace.
(c)3.	+5 vdc power is high.	VR1 defective.	Replace.
	+5 vdc power is low but not zero.	(a) VR1 defective.	Replace.
		(b) Power supply - T1, A4A1CR2,A4A1CR3, A4A1CR4 defective.	Replace.
		(c) Wire from T1-6 to J8-3,T1-8 to J8-2 is broken.	Replace.
	+5 vdc power is zero or negative.	(a) Wire from J2-3 to VR1-2 to J9-5, VR1-1 to J9-6, T1-7 to J8-14 is broken.	Replace.
		(b) VR1 defective.	Replace.
		(c) T1 defective.	Replace.
(c)4.	-24 vdc power is low but not zero.	See below.	
	Measure voltage at ATE 5, voltage shall be -15.0±0.1 vdc. Proceed as noted below.		
	-24 vdc power is low and -15 vdc power is in tolerance.	Power supply - A1C20, A1C21, A1BR1 defective.	Replace.
	-24 vdc and -15 vdc power is low.	Short on -24 vdc or -15 vdc buss.	Isolate and remove short by unplugging plug in assemblies one at a time.

TEST STEP	TROUBLE	PROBABLE CAUSE	CORRECTION
2.E.(1)	Initial Voltage Conditions (cont')		
(c)4. (cont'd)	-24 vdc power is zero.	Wire from J2-6 to J4-8 is broken.	Replace.
(c)5.	-15 vdc power is high.	(a) A8Q1 defective.	Replace.
		(b) A1VR8 out of calibration.	Calibrate per para. 2.F.(4).
	-15 vdc power is low but not zero.	(a) Wire from J4-8 to A8Q1-C is broken.	Replace.
		(b) A1VR8 out of calibration.	Calibrate per para. 2.F.(4).
	-15 vdc power is zero.	Wire from J2-5 to A9-8 to J4-7 is broken.	Replace.
	-15 vdc power is positive.	(a) Wire from J3-M to A8Q1-B, J4-6 to A8Q1-E is broken.	Replace.
		(b) A1VR8 defective.	Replace.
(c)6.	-12 vdc power is out of tolerance but not zero.	(a) Wire from J9-1 to VR2-1, J9-2 to VR2-2, J9-3 to VR2-case, J8-13 to A9-8 is broken.	Replace.
		(b) VR2 defective.	Replace.
	-12 vdc power is zero.	Wire from J2-4-VR2-2 is broken.	Replace.
(c)7. 8. 9.	Tester power out of tolerance.	Tester defective.	Repair.
(c)10.	Radio amplifier output out of tolerance.	See below.	
	Voltage within ±0.2 vdc and GPWS VAL light is on.	Wire from J2-20 to J5-M is broken.	Replace.
	Voltage within ±0.2 vdc and GPWS VAL light is off.	A2U4A,A2U4B,A2Q3 and/or associated components defective.	Replace.
	Voltage beyond ±0.2 vdc and GPWS VAL light is on.	(a) Wire from J11-6 to J4-7 is broken.	Replace.

TEST STEP	TROUBLE	PROBABLE CAUSE	CORRECTION
2.E.(1)	Initial Voltage Conditions (cont'd)		
(c)10. (cont'd)		(b) Faulty ground test- A1V1C,A1U3A,A1U2B and/or A5U3D defective.	Replace.
	Voltage beyond ±0.2 vdc and GPWS VAL light is off.	(a) Wire from J5-AA to J7-9 to J4-5, J5-JJ to J4-2,J5-R to J7-10 to J4-6 is broken.	Replace.
		(b) A2U4A,A2U4B,A2Q3 and/or associated components defective.	Replace.
(c)11.	Linearized altitude voltage out of tolerance.	(a) Variable gain circuit A2U4D,A2Q4,A2Q5 and/or associated components defective.	Replace.
		(b) Linearizer amplifier A2U7A, and/or associated components defective.	Replace.
(c)12.	Radio rate limiter voltage out of tolerance but not zero.	See below.	
	Connect DVM HI (+) lead to ATE 36 and proceed as noted below.		
	Voltage is less than +10 vdc at ATE 36.	200 FT comparator- A2U5B and/or associated components defective.	Replace.
	Voltage is greater than +10 vdc at ATE 36.	See below.	
	Connect DVM HI (+) lead to ATE 13 and proceed as noted below.		
	Voltage is less than +10 vdc at ATE 13.	50 FT comparator- A2U5D and/or associated components defective.	Replace.

TEST STEP	TROUBLE	PROBABLE CAUSE	CORRECTION
2.E.(1)	Initial Voltage Conditions (cont'd)		
(c)12. (cont'd)	Voltage is greater than +10 vdc at ATE 13.	See below.	
	Set FLAPS land 2 switches to DN and connect DVM HI (+) lead to ATE 23. Proceed as noted below.		
	Voltage at ATE 23 is in tolerance.	<50 FT flap overdrive - A1U3C and/or A1U3D defective.	Replace.
	Voltage at ATE 23 is out of tolerance.	(a)<50 FT flap overdrive A1U3D defective.	Replace.
		(b) Rate bias circuit- A2U6A,A2Q7,A2U6B, A2Q6,A2R161,A2R103, A2R100,A2R102 and/ or associated components defective.	Replace.
		(c) Limiter circuit- A2CR13 thru A2CR16, A2R50,A2R48,A2R94 and/or A2AR2 defective.	Replace.
	Radio rate limiter voltage is zero.	Wire from J2-23 to J5-HH is broken.	Replace.
(c)13.	Voltage out of tolerance.	(a) Wire from J4-1 to J6-19, J1B-29 to J6-13,J1B-30 to J6-15 is broken.	Replace.
		(b) See below.	
	Connect DVM HI (+) lead to ATE 27 and proceed as noted below.		
	Voltage at ATE 27 is not 0±95 mvdc.	AC baro amplifier - A3U1A,A3Q2 and/or associated components defective.	Replace.
	Voltage at ATE 27 is 0±95 mvdc.	DC baro amplifier - A3U1B and/or associated components defective.	Replace.
(c)14.	Voltage is zero.	(a) Wire J2-25 to J5-YY is broken.	Replace.

TEST STEP	TROUBLE	PROBABLE CAUSE	CORRECTION
2.E.(1)	Initial Voltage Conditions (cont'd)		
(c)14. (cont'd)		(b) A2R70 defective.	Replace.
	Voltage out of tolerance.	See below.	
	Connect DVM HI (+) lead to ATE 26 and proceed as noted below.		
	Voltage at ATE 26 is -6.225±0.150 vdc.	Complementary filter - A2AR3,A2R60,A2R72 and/or A2R76 defective.	Replace.
	Voltage at ATE 26 is not -6.225±0.150 vdc.	Trip equation circuit - A2U2C and/or associated components defective.	Replace.
(c)15.	Voltage out of tolerance.	(a) Wire from J5-EE to J7-2 is broken.	Replace.
		(b) Baro rate filter circuit- A2AR1 and/ or associated components defective.	Replace.
2.E.(2)	Initial Logic Conditions		
(a)1.	Voltage out of tolerance, but not zero.	(a) 2450 FT comparator circuit - A2U6D and/ or associated components defective.	Replace.
		(b) $\overline{\text{SINK}}$ control logic - A1U7B defective.	Replace.
	Voltage is zero.	Wire J2-8 to J5-X is broken.	Replace.
(a)2.	Voltage out of tolerance, but not zero.	(a) 1000 FT comparator circuit - A2U5A and/ or associated components defective.	Replace.
		(b) Test logic - A1U6D defective.	Replace.
		(c) Glideslope logic - A6U2B,A6U3D,A6U4B and/or A6CR10.	Replace.

TEST STEP	TROUBLE	PROBABLE CAUSE	CORRECTION
2.E.(2)	Initial Logic Conditions (cont'd)		
(a)2. (cont'd)	Voltage is zero.	Wire from J2-9 to J5-RR is broken.	Replace.
(a)3.	Voltage out of tolerance, but not zero.	(a) 700 FT comparator circuit - A2U5C and/ of associated components defective.	Replace.
		(b) Take-off logic - A1U6A and/or A6CR36 defective.	Replace.
		(c) Gear logic - A3U8C defective.	Replace.
	Voltage is zero.	Wire from J2-10 to J5-NN is broken.	Replace.
(a)4.	Voltage out of tolerance.	300 FT comparator circuit A6U7B and/or associated components defective.	Replace.
(a)5.	Voltage is zero.	Wire from J2-12 to J5-J is broken.	Replace.
	Voltage out of tolerance, but not zero.	(a) Terrain clearance circuit - A2U3D, A2U3A and/or associated components defective.	Replace.
		(b) Warning control logic A1U7A and A1U7C defective.	Replace.
(a)6.	Voltage is zero.	Wire from J2-13 to A9-6 is broken.	Replace.
	Voltage out of tolerance, but not zero.	(a) 50 FT comparator circuit - A2U5D and/ or associated components defective.	Replace.
		(b) Warning control logic A1U3A,A1U3C and/or A1U4B defective.	Replace.

TEST STEP	TROUBLE	PROBABLE CAUSE	CORRECTION
2.E.(2)	Initial Logic Conditions (cont'd)		
(a)7.	Voltage out of tolerance.	(a) Sinkrate circuit - A2U2B,A2U2D and/or associated components defective.	Replace.
		(b) Sinkrate logic - A1U7B defective.	Replace.
(a)8.	Voltage is zero.	Wire from J2-14 to J11-3 is broken.	Replace.
	Voltage out of tolerance, but not zero.	(a) $\overline{CW}$ comparator - A2U3C and/or associated components defective.	Replace.
		(b) Wire from J11-13 to J5-E is broken.	Replace.
(a)9.	Voltage is zero.	Wire from J2-31 to J7-6 is broken.	Replace.
	Voltage out of tolerance, but not zero.	See below.	
	Set FLAP switch to FLAP and verify voltage at ATE 31. Proceed as noted below.		
	Voltage within tolerance.	Flap input buffer - A2U7B,A3U4B and/or A3U4A defective.	Replace.
	Voltage out of tolerance.	(a) Flap logic - A3U4D, A3U4C,A3U2A,A3U2D and/or associated components defective.	Replace.
		(b) Warning control logic A1U3D and/or A1U5D defective.	Replace.
(a)10.	Voltage out of toleranc.	See below.	
	Rotate GS ADJ dial fully clockwise and wait 8 seconds. Proceed as noted below.		

TEST STEP	TROUBLE	PROBABLE CAUSE	CORRECTION
2.E.(2)	Initial Logic Conditions (cont'd)		
(a)10. (cont'd)	VAL light is off.	(a) Test circuit - A6U7D and/or associated components defective.	Replace.
		(b) Test circuit - A1U2C, A2U2D and/or A2Q21 defective.	Replace.
		(c) Input buffer circuit- A6AR1,A6U1A and/or associated components defective.	Replace.
	VAL light is on and voltage at ATE 17 is within tolerance.	Altitude bias - A6U6B and/or associated components defective.	Replace.
	VAL light is on and voltage at ATE 17 is out of tolerance.	See below.	
	Connect DVM HI (+) lead to ATE 18 and proceed as noted below.		
	Voltage at ATE 18 is less than +1 vdc.	Glideslope soft comparator - A6U7A,A6U3B,A6A6 and/or associated components defective.	Replace.
	Voltage at ATE 18 is greater than +1 vdc.	Low pass filter - A6U1B and/or associated components defective.	Replace.
(a)11.	Voltage out of tolerance.	Glideslope hard comparator - A6U7C and/or associated components defective.	Replace.
(a)12	Voltage is zero.	Wire from J2-36 to J5-ZZ is broken.	Replace.
	Voltage out of tolerance, but not zero.	200 FT comparator - A2U5B and/or associated components defective.	Replace.

TEST STEP	TROUBLE	PROBABLE CAUSE	CORRECTION
2.E.(2)	Initial Logic Conditions (cont'd)		
(b)	All lights are on.	Lamp test circuit - A5U1D and/or associated components defective.	Replace.
	RADIO ALT light is on.	Radio altitude lamp driver - A5U2D and/or associated components defective.	Replace.
	GEAR light is on.	Gear lamp driver - A5U1A and/or associated components and/or A7M3 defective.	Replace.
	AIR DATA light is on.	Air data lamp driver - A5U2A and/or associated components and/or A7M2 defective.	Replace.
	FLAP DN light is on.	Flap lamp driver - A5U1B and/or A7M3 defective.	Replace.
	GPWC OK light is on.	GPWC OK lamp driver - A5U1C and/or A7M3 defective.	Replace.
	GS VAL light is on.	Glideslope validity lamp driver - A5U2B and/or A7M2 defective.	Replace.
(c)	Voltage out of tolerance.	(a) Wire from J6-4 to J1A-24 is broken.	Replace.
		(b) Flap input buffer - A3U7B and/or CR21 defective.	Replace.
	GPWS VAL light is on.	See below.	
	Press and hold computer front panel SELF TEST switch and proceed as noted below.		
	Computer front panel lights come on, then only GPWC OK light stays on.	(a) Wire from J3-AA to K2-3, J4-3 to K2-7 and/or A1W9 is broken.	Replace.

TEST STEP	TROUBLE	PROBABLE CAUSE	CORRECTION
2.E.(2)	Initial Logic Conditions (cont'd)		
(c) (cont'd)		(b) Validity relay - K2 defective.	Replace.
		(c) Validity driver circuit - A1U8D, A1Q14, Q1Q15,A1U6C and/or associated components defective.	Replace.
	Computer front panel lights momentarily come on, then all lights go off.	(a) Wire from J11-23 to K1-7 and/or A5E23 is broken.	Replace.
		(b) $\overline{\text{Inhibit}}$ circuit - A1Q1 thru A1Q9,A1CR24 and/or associated components defective.	Replace.
		(c) $\overline{\text{Inhibit}}$ circuit - A5Q1 and/or associated components defective.	Replace.
		(d) For all models except model -087 - A1U6B and/or A1U1A defective.	Replace.
	Computer frong panel lights momentarily come on, then only G/S VAL light stays on.	See below.	
	Rotate GS ADJ dial fully coounterclockwise and connect DVM HI (+) lead to ATE 17. Proceed as noted below.		
	Voltage at ATE 17 is +1 vdc maximum.	(a) For all models except models -070 and -087. Wire from J12-26 to J1-23,J13-27 to J1A-22,J12-29 to J1B-31, J12-30 toJ1B-32. Wire from A6E26, A6E27,A6E29 and/or A6E30 is broken.	Replace.

TEST STEP	TROUBLE	PROBABLE CAUSE	CORRECTION
2.E.(2)	Initial Logic Conditions (cont'd)		
(c) (cont'd)		(b) Glideslope buffer circuit - A6AR1, A6U1A, A6U1B and/or associated components defective.	Replace.
	Voltage at ATE 17 is +12 vdc minimum and GPWS VAL light is on.	Glideslope fault circuit - A6U6D and/or associated components defective.	Replace.
	Voltage at ATE 17 is +12 vdc minimum and GPWS VAL light is off.	(a) Glideslope buffer circuit - A6AR1, A6U1A,A6U1B and/or associated components defective.	Replace.
		(b) Glideslope fault circuit - A6U6D and/or associated components defective.	Replace.
	Computer front panel lights momentarily come on, then only AIR DATA light stays on.	See below.	
	Set SELF TEST switch to SELF TEST and connect DVM HI (+) lead to ATE 29. Proceed as noted below.		
	Voltage at ATE 29 is more positive than -1 vdc or more negative than -4 vdc.	(a) Baro reference circuit - A3U3B, A3U3B,A3U2B, A3Q16, A2Q17 and/or associated components defective.	Replace.
		(b) Wire from J1B-39 to J6-29 and/or wire A3E29 is broken.	Replace.

TEST STEP	TROUBLE	PROBABLE CAUSE	CORRECTION
2.E.(2)	Initial Logic Conditions (cont'd)		
(c) (cont'd)	Voltage at ATE 29 is -1 vdc to -4 vdc.	(a) $\overline{\text{Baro inhibit}}$ circuit - A3U8B,A3U8A,A3Q3, A3Q4,Q3Q5,A3Q12, A3Q13,A3Q14 and/or associated components defective.	Replace.
		(b) Wire from J1B-27 to J6-12, and/or wire A3E27 is broken. For models -070,-071 -072, and -073 only - wire from J6-27 to J1A-7 is broken.	Replace.
	Computer front panel lights momentarily come on, then only RADIO ALT light stays on.	(a) Wire from J11-24 to J5-5, J11-26 to J1B-19 and/or wires A5E24 and A5E26 defective.	Replace.
		(b) Radio validity circuit - A5U3B, A5Q2 and/or assoc-iated components defective.	Replace.
(d)1.	Voltage out of tolerance.	See below.	
	Set FLAP switch to FLAP and proceed as noted below.		
	Voltage is in tolerance.	Flap buffer - A3U7B, A3U4A,A3U4B and/or A3U4D defective.	Replace.
	Voltage remains out of tolerance.	Flap logic and delay circuit - A3U4A,A3U4D, A3U4C,A3U2A,A3U2D and/ or associated components defective.	Replace.
(d)2.	Voltage is zero.	Wire from J2-32 to J7-5 is broken.	Replace.

TEST STEP	TROUBLE	PROBABLE CAUSE	CORRECTION
2.E.(2)	Initial Logic Conditions (cont')		
(d)2. (cont'd)	Voltage out of tolerance, but not zero.	See below.	
	Press and hold computer front panel SELF TEST switch. Proceed as noted below.		
	Computer front panel lights momentarily come on, then only GEAR light stays on.	Gear down buffer circuit - A3U7A,A2U7C and/or CR22 defective.	Replace.
	Computer front panel lights momentarily come on, then only GEAR goes off.	Gear down buffer circuit - A3U2C,A3K1, A3U8C and/or associated components defective.	Replace.
(d)3.	Voltage out of tolerance.	See below.	
	Connect DVM HI (+) lead to ATE 30 and proceed as noted below.		
	Voltage at ATE 30 is 0±100 mvdc.	Take-off loss comparator-A2U1B,A2CR6 and/or associated components defective.	Replace.
	Voltage at ATE 30 is not 0±100 mvdc.	(a) Wire from J5-KK to J3-LL is broken.	Replace.
		(b) $\overline{\text{Integrate}}$ logic A1U5A and/or A1R44 defective.	Replace.
		(c) Take-off loss integrator and control - A2U1C,A2U1D and/or associated components defective.	Replace.
(d)4.	AURAL light is on and 1 light is off.	Lamp driver A1Q18 and/or associated components defective.	Replace.
	AURAL light is on and 1 light is on.	See below.	

TEST STEP	TROUBLE	PROBABLE CAUSE	CORRECTION
2.E(2)	Initial Logic Conditions (cont'd)		
(d)4. (cont'd)	On models -072 and -079 which do not have indicator balls, the following test may be performed by connecting a 10K resistor from ATE 1 to the ATE jack listed. Also connect the DVM HI (+) lead to the ATE jack listed. A measurement of less than +1 vdc shall be equivalent to a white ball indication.		
	On all models except models -072 and -079 momentarily press computer front panel WARNING MODE RESET switch and proceed as noted below.		
	All indicators are black (ATE 61,62,63,64)	Warning delay circuit - A1U8B,A1Q13 and/or associated components defective.	Replace.
	HI SINK indicator (ATE 61) is white.	(a) Wire from J5-CC to J3-L is broken.	Replace.
		(b) Mode 1 logic - A1U7B defective.	Replace.
	TAKE OFF indicator (ATE 62) is white.	Mode 3 logic - A1U5C defective.	Replace.
	GEAR/FLAP indicator (ATE 64) is white.	Mode 4 logic - A1U7A defective.	Replace
(d)5.	1 light is on and 2 light is off.	Lamp relay K1 defective.	Replace.
	2 light is on and 1 light is off.	Lamp relay K1 defective.	Replace.
	1 and 2 lights are on.	(a) Lamp relay K1 defective.	Replace.
		(b) Lamp relay driver - A1Q16,A1Q17 and/or associated components defective.	Replace.
	3 light is flashing.	(a) A1W4 wire is broken.	Replace.
		(b) A1CR50 defective.	Replace.

TEST STEP	TROUBLE	PROBABLE CAUSE	CORRECTION
2.E.(2)	Initial Ligic Conditions (cont'd)		
(d)5. (cont'd)	3 light is on.	Flasher circuit - A1U8C,A1Q19,AqQ20 and/or associated components defective.	Replace.
(d)6.	EVENT light is on.	Event lamp driver - A1Q22,A1Q23 and/or associated components defective.	Replace.
(d)7	GPWS VAL light is on.	A1CR16 defective.	Replace.
(d)8.	GS light is on.	See below.	
	Increase VOLUME control and proceed as noted below.		
	Glideslope voice is present.	(a) Glideslope logic - A6A2U4A defective.	Replace.
		(b) A6A1,A6Q4 thru A6Q6 and/or associated components defective.	Replace.
	Glideslope voice is not present.	Glideslope lamp driver - A6A2Q2,A6A2Q3 and/or associated components defective.	Replace.
(d)9.	Computer front panel FLAP DN light is on, other front panel lights are off.	(a) Flap logic clamp - A3CR18 defective.	Replace.
		(b) Lamp driver circuit - A5U1B and/or associated components defective.	Replace.
	Computer front panel FLAP DN light is on, other front panel lights are on.	V Ref No. 2 circuit - A5U3A,A5VR4 and/or associated components defective.	Replace.

TEST STEP	TROUBLE	PROBABLE CAUSE	CORRECTION
2.E.(2)	Initial Logic Conditions (cont'd)		
(e)1.	Voltage is zero.	See below.	
	Connect DVM HI (+) lead to ATE 62 and proceed as noted below.		
	Voltage at ATE 62 is not zero.	For models -070,-071, -073,-081 and -087 only. See below.	
		(a) Wire from J2-61 to P1-E7,A7P2-1 to A7B1-1 and/or wire A10E1 is broken.	Replace.
		(b) A10R1 defective.	Replace.
		(c) A7B1 defective.	Replace.
		For models -072 and -079 only. See below.	
		(a) Wire from J2-61 to P1-E1 and/or wire A10E7 is broken.	Replace.
		(b) A10R1 and/or A10R6 defective.	Replace.
	Voltage at ATE 62 is zero.	For models -070,-071, -073,-081 and -087 only. See below.	
		Wire from A7-E34 to A7B5-3 and/or wire A7E1 is broken.	Replace.
		For models -072 and -079 only. See below.	
		Wire from A7-E34 to A7P2-6 and/or wires A7E1 and A10E6 are broken.	Replace.
	Voltage at ATE 61 is out of tolerance but not zero.	(a) Ball driver comparator - A5U6A and/or associated components defective.	Replace.
		(b) Ball driver - A7M1 defective.	Replace.

TEST STEP	TROUBLE	PROBABLE CAUSE	CORRECTION
2.E.(2)	Initial Logic Conditions (cont'd)		
(e)2.	Voltage is zero.	For models -070,-071, -073,-081 and -087 only. See below.	
		(a) Wire from J2-62 to P1-E8,A7P2-2 to A7B2-1 and/or wire A10E2 is broken.	Replace.
		(b) Isolation resistor A10R2 and/or indicator A7B2 defective.	Replace.
		For models -072 and -079 only. See below.	
		(a) Wire from J2-62 to P1-E2 and/or wire A10E8 is broken.	Replace.
		(b) A10R2 and/or A10R7 defective.	Replace.
	Voltage out of tolerance, but not zero.	(a) Ball driver comparator - A5U5D and/or associated components defective.	Replace.
		(b) Ball driver - A7M1 defective.	Replace.
(e)3.	Voltage is zero.	For models -070,-071, -073,-081 and -087 only. See below.	
		(a) Wire from J2-63 to P1-E9, A7P2-3 to A7B3-1 and/or wire A10E3 is broken.	Replace.
		(b) Isolation resistor A10R3 and/or indicator A7B3 defective.	Replace.

TEST STEP	TROUBLE	PROBABLE CAUSE	CORRECTION
2.E.(2)	Initial Logic Conditions (cont'd)		
(e)3. (cont'd)		For models -072 and -079 only. See below.	
		(a) Wire from J2-63 to P1-E3 and/or wire A10E9 is broken.	Replace.
		(b) A10R3 and/or A10R8 defective.	Replace.
	Voltage out of tolerance, but not zero.	(a) Ball driver comparator - A5U6B and/or associated components defective.	Replace.
		(b) Ball drive A7M1 defective.	Replace.
(e)4.	Voltage is zero.	For models -070,-071,-073 -081 and -087 only. See below.	
		(a) Wire from J2-64 to P1-E10,A7P2-4 to A7B4-1 and/or wire A10E4 is broken.	Replace.
		(b) Isolation resistor A10R4 and/or indicator A7B4 defective.	Replace.
		For models -072 and -079 only. See below.	
		(a) Wire from J2-64 to P1-E4 and/or wire A10E10 is broken.	Replace.
		(b) A10R4 and/or A10R9 defective.	Replace.
	Voltage out of tolerance, but not zero.	(a) Ball driver comparator - A5U5C and/or associated components defective.	Replace.
		(b) Ball driver A7M1 defective.	Replace.

TEST STEP	TROUBLE	PROBABLE CAUSE	CORRECTION
2.E.(2)	Initial Logic Conditions (cont'd)		
(e)5.	Voltage is zero.	For models -070,-071, -073,-081 and -087 only. See below.	
		(a) Wire from J2-65 to P1-E11, A7P2-5 to A7B5-1 and/or wire A10E5 is broken.	Replace.
		(b) Isolation resistor A10R5 and/or indicator A7B5 defective.	Replace.
		For models -072 and -079 only. See below.	
		(a) Wire from J2-65 to P1-E5 and/or wire A10E11 is broken.	Replace.
		(b) A10R5 and/or A10R10 defective.	Replace.
	Voltage out of tolerance, but not zero.	(a) Ball driver comparator - A5U5B and/or associated components defective.	Replace.
		(b) Ball driver A7M2 defective.	Replace.
(f)1. thru 5.	One or more indicator balls is white	(a) Wire from J4-9 to K2-6,K2-6 to K1-6, K1-6 to K1-2,K1-2 to J11-21,A7-E35 to SW2, SW2 to B1 thru B5 pin 4 and/or wire A7E2 is broken.	Replace.
		(b) WARNING MODE RESET switch SW2 defective.	Replace.
		(c) Indicators B1 thru B5 defective.	Replace.

TEST STEP	TROUBLE	PROBABLE CAUSE	CORRECTION
2.E.(2)	Initial Logic Conditions (cont'd)		
(f)6.	Same as test step 2.E.(2)(d)9.		
2.E.(3)	Radio Altitude Input to 300 Feet		
(a)	Voltage is zero.	Wire from J2-20 to J5-H is broken.	Replace.
	Voltage out of tolerance, but not zero.	(a) Wire from J1B-21 to J5-C is broken.	Replace.
		(b) Test altitude generator - A2U4B and/or associated components defective.	
		(c) Radio buffer - A2U4A and/or associated components defective.	Replace.
(b)	Voltage is zero.	Wire from J2-21 to J5-N is broken.	Replace.
	Voltage out of tolerance, but not zero.	Radio linearizer circuit - A2U7A,A2U7B, A2U4D,A2Q4,A2Q5 and/or associated components defective.	Replace.
(c)	Voltage out of tolerance.	200 FT comparator - A2U5B and/or associated components defective.	Replace.
(d)	Voltage out of tolerance.	50 FT comparator - A2U5D and/or associated components defective.	Replace.
(e)	Voltage out of tolerance.	Gear down latch buffer - A3U2C defective.	Replace.
(f)	Voltage out of tolerance.	AC baro buffer circuit - A3U3A,A3R10 and/or associated components defective.	Replace.

TEST STEP	TROUBLE	PROBABLE CAUSE	CORRECTION
2.E.(3)	Radio Altitude Input to 300 Feet (cont'd)		
(g)	Voltage out of tolerance.	(a) Control logic - A1U3C and/or A1U3D defective.	Replace.
		(b) Wire from J5-Z to J3-XX, J3-NN to J7-6 is broken.	Replace.
		(c) Bias circuit - A2U6B, A2Q6 and/or associated components defective.	Replace.
		(d) Limit circuit - A2AR2 and/or associated components defective.	Replace.
(h)	Voltage out of tolerance.	A2U3A and A2U3D defective.	Replace.
(i)	Voltage is zero.	Wire from J2-26 to J5-WW is broken.	Replace.
	Voltage out of tolerance, but not zero.	Trip equation circuit - A2U2C and/or associated components defective.	Replace.
2.E.(4)	DC Baro Signal Processing		
(a)1.	Voltage is zero.	Wire from J2-29 to J7-2 is broken.	Replace.
	Voltage out of tolerance, but not zero.	(a) Wire from J1B-28 to J6-16 is broken.	Replace.
		(b) DC baro circuit - A3U1B and/or associated components defective.	Replace.
		(c) Clamp circuit - A3Q1, A3Q15 and/or associated components defective.	Replace.

TEST STEP	TROUBLE	PROBABLE CAUSE	CORRECTION
2.E.(4)	DC Baro Signal Processing (cont'd)		
(a)2.	Voltage is zero.	Wire from J2-28 to J5-UU, J5-EE to J7-2 is broken.	Replace.
	Voltage out of tolerance, but not zero.	(a) Baro No. 2 filter circuit - A2AR1 and/or associated components defective.	Replace.
		(b) Wire from J5-EE to J7-2 is broken.	Replace.
(a)3.	Voltage out of tolerance.	<TC circuit - A2U3A, A2U3D and/or associated components defective.	Replace.
(a)4.	Voltage out of tolerance.	(a) Control logic - A1U4B A1U6F,A1U4D and/or A1U5A defective.	Replace.
		(b) Take-off loss integrator and control - A2U1C,A2CR6 and/or associated components defective.	Replace.
		(c) Wire from J5-KK to J3-LL is broken.	Replace.
(a)5.	Voltage out of tolerance.	Sinkrate circuit - A2U2D, A2U2B and/or associated components defective.	Replace.
(b)1.	Voltage out of tolerance.	Gear latch driver - A3U8C,A3Q11 and/or associated components defective.	Replace.
(b)2.	Voltage is zero.	Wire from J2-15 to J5-MM is broken.	Replace.
	Voltage out of tolerance, but not zero.	See below.	
	Press and hold computer front panel SELF TEST switch. Proceed as noted below.		

TEST STEP	TROUBLE	PROBABLE CAUSE	CORRECTION
2.E.(4)	DC Baro Signal Processing (cont'd)		
(b)2. (cont'd)	Computer front panel lights momentarily come on, then only GEAR light goes off.	Gear buffer - A3U7A, A3U7C defective.	Replace.
	Computer front panel GEAR light stays on.	See below.	
	Connect DVM HI (+) lead to ATE 30 and proceed as noted below.		
	Voltage at ATE 30 is less than +2.25 vdc.	(a) Wire from J7-3 to J4-B is broken.	Replace.
		(b) Control logic - A1U6F,A1U4B,A1U4D and/or A1U5A defective.	Replace.
		(c) T.O latch circuit - A1K1,A1Q10,A1Q11, A1Q12,A1U6A,A1U7C, A1U6E and/or associated components defective.	Replace.
		(d) Take-off loss integrator and control - A2U1C,A2U1D and/or associated components defective.	Replace.
	Voltage at ATE 30 is greater than +2.25 vdc.	Take-off loss comparator - A2U1A,A2U1B and/or associated components defective.	Replace.
(b)3.	AURAL light is off and 1 light is on.	(a) Wire from J3-CC to J1B-25 and/or wire A1W5 is broken.	Replace.
		(b) Lamp driver - A1Q18 and/or associated components defective.	Replace.

TEST STEP	TROUBLE	PROBABLE CAUSE	CORRECTION
2.E.(4)	DC Baro Signal Processing (cont'd)		
(b)3. (cont'd)	AURAL light is off and 1 light is off.	(a) Wire from J1B-6 to J4-9 is broken.	Replace.
		(b) Control logic - A1U8B,A1U8A,A1U1B, A1U3B,A1U5C,A1Q13 and/or associated components defective.	Replace.
(b)4.	1 light is off and 2 light is on.	(a) Wire J1B-11 to K1-1 is broken.	Replace.
		(b) Lamp relay - K1 defective.	Replace.
	2 light is off and 1 light is on.	(a) Wire from J1B-9 to K1-5 is broken.	Replace.
		(b) Lamp relay - K1 defective.	Replace.
	1 and 2 lights are off.	(a) Wire from J3-EE to K1-3 and/or wire A1W8 is broken.	Replace.
		(b) Lamp relay driver - A1Q16,Q1Q17 and/or associated components defective.	Replace.
(b)5.	3 light is not flashing.	(a) Flasher circuit - A1U8C, A1Q19,A1Q20 and/or associated components defective.	Replace.
		(b) Wire from J1A-13 to J3-U is broken.	Replace.
(b)6.	EVENT light is off.	Wire from J1B-10 to J3-W and/or wire A1W7 is broken.	Replace.
(b)7.	GPWS VAL light is on.	Test logic - A1U3A defective.	Replace.

TEST STEP	TROUBLE	PROBABLE CAUSE	CORRECTION
2.E.(4)	DC Baro Signal Processing (cont'd)		
(b)8.	TAKE OFF (3) indicator is black.	(a) Wire from J3-TT to J11-15,A7E18 to A7B3-1 and/or wire A7E5 is broken.	Replace.
		(b) A7B3 driver circuit - A5U6B and/or associated components and/or A7M1 defective.	Replace.
		(c) V Ref. 1 - A1VR4 and/or A5R80 defective.	Replace.
		(d) Power loss protection circuit - A5Q3 and/or associated components defective.	Replace.
		(e) Indicator A7B3 defective.	Replace.
(b)9.	GPWC OK lights on.	Lamp driver - A5U1C and/or associated components defective.	Replace.
(c)	Voltage out of tolerance.	(a) Ball driver - A7M1 defective.	Replace.
		(b) Also for models -072 and -079 only. See test step 2.E.(4)(b)8.	
(d)	No "whoop-whoop" but voice is normal.	Chip select - A4U5, A4U11B,A4U19 and/or associated components defective.	Replace.
	No voice but "whoop-whoop" is normal.	Chip select - For model -073,A4U5,A411B and/or A4U21 defective.	
		For all other models, A4U5,A4U11B,A4U1 and/or A4U2 defective.	

TEST STEP	TROUBLE	PROBABLE CAUSE	CORRECTION
2.E.(4)	DC Baro Signal Processing (cont'd)		
(d) (cont'd)	The word Glideslope is heard.	Chip select - A4U11A defective.	Replace.
	No voice warning.	See below.	
	Continue test. See test	step 2.E.(12)(e).	
(e)1.	Voltage out of tolerance, stays out of tolerance.	Take-off loss integrator control - A2U1C and/or associated components defective.	Replace.
	Voltage out of tolerance, but after approximately one minute becomes in tolerance.	Climb detector - A2U11A and/or associated components defective.	Replace.
(e)2.	AURAL light is on.	Lamp driver - A1Q18 defective.	Replace.
(e)3.	1 light is on.	(a) Relay driver - A1Q16 and/or A1Q17 defective.	Replace.
		(b) Relay - K1 defective.	Replace.
(e)4.	2 light is on.	Relay - K1 defective.	Replace.
(e)5.	3 light is on.	Flasher circuit - A1U8C, A1Q19 and/or A1Q20 defective.	Replace.
(e)6.	EVENT light on.	Lamp driver - A1Q22 and/ or A1Q23 defective.	Replace.
(e)8.	G/S light is on.	Glideslope logic - A6U4A defective.	Replace.
(f)1.	Voltage out of tolerance.	DC baro buffer - A3U1B defective.	Replace.
(f)2.	Voltage out of tolerance.	Baro No. filter - A2AR1 defective.	Replace.
(g)	Warning is present.	(a) Clock control -A4U10A A4U1D,A4U4C,A4U6A, A4U6B,A4U9A,A4U9B, A4U10C,A4U10D and/ or A4U14A defective.	Replace.
		(b) Wire A4W9 is broken.	Replace.

TEST STEP	TROUBLE	PROBABLE CAUSE	CORRECTION
2.E.(4)	DC Baro Signal Processing (cont'd)		
(h)	Voltage out of tolerance.	(a) Wire from J3-UU to J6-30 and/or wire A3E30 is broken.	Replace.
		(b) Baro clamp circuit - A3Q1,A3Q15 and/or associated components defective.	Replace.
2.E.(5)	AC Baro Signal Processing		
(a)	Voltage out of tolerance.	(a) AC baro clamp - A3Q12 and/or A3R16 defective.	Replace.
		(b) AC baro buffer circuit - A3U3A,A3U1A and/or associated components defective.	Replace.
(b)	Voltage out of tolerance.	(a) AC reference circuit- A3U2B,A3U3B,A3Q16, A3Q17 and/or associated components defective.	Replace.
		(b) Wire from J1B-37 to J6-25 and/or wire A3-25 is broken.	Replace.
(c)	Voltage out of tolerance.	AC reference circuit - A3U2B,A3U3B,A3Q16, A3Q17 and/or associated components defective.	Replace.
(d)	Voltage out of tolerance.	Reference level select - A3Q17 and/or associated components defective.	Replace.
(e)	Voltage out of tolerance.	Reference level select - A3Q17 and/or associated components defective.	Replace.

TEST STEP	TROUBLE	PROBABLE CAUSE	CORRECTION
2.E.(5)	AC Baro Signal Processing (cont'd)		
(f)	Voltage out of tolerance.	AC baro buffer circuit - A3U3A and/or A3U1A defective.	Replace.
(g)	Voltage out of tolerance.	(a) Wire from J1B-23 to J6-18 is broken.	Replace.
		(b) Gear buffer circuit - A3U7A and/or A3CR23 defective.	Replace.
2.E.(6)	Flap Delay Logic		
(a)	Voltage does not switch to +12 vdc minimum.	(a) Wire from J1B-24 to J6-10 is broken.	Replace.
		(b) Flaps buffer circuit- A3U7B and/or A3CR20 defective.	Replace.
	Time out of tolerance.	Delay circuit - A3C26 and/or A3R73 thru A3R77 defective.	Replace.
(b)	Voltage does not switch to +12 vdc minimum.	Control logic - A1U4B, A4U4D defective.	Replace.
2.E.(7)	Altitude Loss Comparator Verification		
(a)	Time out of tolerance.	Take-off loss integrator or comparator - A2C1, A2Q1,A2R15 and/or A2R21 thru A2R24 defective.	Replace.
(b)	Time out of tolerance.	(a) Take-loss integrator comparator - A2C1, A2Q1,AwR15 and/or A2R21 thru A2R24 defective.	Replace.
		(b) Radio altitude linearizer - A2U7A,A2U7B A2U4D,A2Q4,A2Q5 and/or associated components defective.	Replace.

TEST STEP	TROUBLE	PROBABLE CAUSE	CORRECTION
2.E.(7)	Altitude Loss Comparator Verification (cont'd)		
(c)	AURAL light is on.	(a) Baro validity circuit - For models -070,-081 and -087 only - A3U8A and/or associated components defective.	Replace.
		For models -071,-072, -073 and -079 only - A3Q3 and/or associated components defective.	
		(b) Control logic - A1U5C and/or A1CR34 defective.	Replace.
	GPWS VAL light is off.	(a) Validity relay driver - A1U8D,A1Q14, A1Q15 and/or associated components defective.	Replace.
		(b) Validity relay - K2 defective.	Replace.
		(c) Wire from J1B-12 to K2-8 is broken.	Replace.
	Time out of tolerance.	Validity delay - A1C7, A1R36,A1R38,A1R39 and/or A1CR30 defective.	Replace.
(d)	AIR DATA light is on.	Air data lamp driver - A5U2A and/or associated components defective.	Replace.
(f)1.	Voltage out of tolerance.	(a) 700 FT comparator - A2U5C and/or associated components defective.	Replace.
		(b) Radio altitude linearizer - A2U7A,A2U7B, A2U4D,A2Q4,A2Q5 and/or associated components defective.	Replace.

TEST STEP	TROUBLE	PROBABLE CAUSE	CORRECTION
2.E.(7)	Altitude Loss Comparator Verification (cont'd)		
(f)2.	Voltage is zero.	(a) Wire from J2-11 to J12-23 and/or wire A6E23 is broken.	Replace.
		(b) Pull-up resistor - A6R64 defective.	Replace.
	Voltage out of tolerance, but not zero.	300 FT comparator - A6U7B defective.	Replace.
(f)3.	Voltage out of tolerance.	<TC circuit - A2U3D and/ or associated components defective.	Replace.
(f)4.	Voltage out of tolerance.	(a) Wire from J7-7 to J5-TT is broken.	Replace.
		(b) Gear latch circuit - A3U2C,A3K1,A3U8C and/or associated components defective.	Replace.
2.E.(8)	Terrain Clearance Comparator Verification		
(a)	Voltage out of tolerance, at BP-20.	For models -070,-071, -072,-073,-079 and -081 only - A2U3A,A2U3D and/ or associated components defective.	Replace.
		For model -087 only - A2U3A,A2U3D,A2A1Q3 and/ or associated components defective.	Replace.
(b)1.	AURAL light is off.	(a) Wire from J5-D to J3-N is broken.	Replace.
		(b) A1U7C,A1Q11,A1K1 and/ or associated components defective.	Replace.

TEST STEP	TROUBLE	PROBABLE CAUSE	CORRECTION
2.E.(8)	Terrain Clearance Comparator Verification (cont'd)		
(b)2.	GEAR (4) indicator is black.	(a) A7M1,A7B4,A5U5C and/or associated components defective.	Replace.
		(b) Wire from J11-14 to J3-R is broken.	Replace.
(b)3.	Voltage out of tolerance.	A7M1 defective.	Replace.
(c)	Voltage at ATE 32 out of tolerance.	(a) A3K1,A3Q10,A3U2C and/or associated components defective.	Replace.
		(b) Wire from J7-5 to J5-PP is broken.	Replace.
	Voltage at ATE 12 out of tolerance.	A2U3D,A2U3A and/or associated components defective.	Replace.
	AURAL light is on.	A1U7C,A1Q11,A1K1 and/or associated components defective.	Replace.
(d)	Voltage at BP-20 out of tolerance.	A2U3D,A2U3A and/or associated components defective.	Replace.
(e)	AURAL light is on.	A1U7A and/or associated components defective.	Replace.
(f)	Voltage is high.	A2Q9 and/or associated components defective.	Replace.
(g)	Voltage out of tolerance.	A2R129 and/or associated components defective.	Replace.
(h)	AURAL light is off.	A1U7A,A1U4B,A1U4C,A1U4D and/or associated components defective.	Replace.
(i)	Voltage out of tolerance.	A2R126 defective.	Replace.

TEST STEP	TROUBLE	PROBABLE CAUSE	CORRECTION
2.E.(8)	Terrain Clearance Comparator Verification (cont'd)		
(j)	Voltage is low.	For models -070,-071, -072,-073,-079 and -081 only - A2R120,A2U3A and/or associated components defective.	Replace.
		(a) For model -087 only - A2A1Q1,A2A103 and/or associated components defective.	Replace.
		(b) For model -087 only - A2A1R8 and/or A2A1R10 our of calibration.	Calibrate per para. 2.F.(6).
(k)	Voltage out of tolerance.	For models -070,-071, -072,-073,-079 and -081 only - A2R120,A2U3A and/or associated components defective.	Replace.
		(a) For model -087 only - A2R120,A2U3A,A2A1Q3 and/or associated components defective.	Replace.
		(b) For model -087 only - A2A1R8 and/or A2A1R10 out of calibration.	Calibrate per para. 2.F.(6).
(l)	Voltage out of tolerance.	For models -070,-071, -072,-073,-079 and -081 only - A2R120,A2U3A and/or associated components defective.	Replace.
		(a) For model -087 only - A2R120,A2U3A,A2A1Q3 and/or associated components defective.	Replace.
		(b) For model -087 only - A2A1R8 and/or A2A1R10 out of calibration.	Calibrate per para. 2.F.(6).

TEST STEP	TROUBLE	PROBABLE CAUSE	CORRECTION
2.E.(8)	Terrain Clearance Comparator Verification (cont'd)		
(m)	Voltage is high.	A1U5A defective.	Replace.
(n)	All lights are on.	(a) Wire from J1A-14 to J6-6 is broken.	Replace.
		(b) A3U4,A1U5A and/or associated components defective.	Replace.
(o)	Voltage at ATE 31 is low.	A3U4 and/or associated components defective.	Replace.
	Voltage at ATE 15 is low.	A1U5A and/or associated components defective.	Replace.
	Steps (p)1. thru (p)3. below are applicable to model -087 only.		
(p)1.	Voltage is low.	A2A1Q3,A2Q9 and/or associated components defective.	Replace.
2.	Voltage out of tolerance.	A2A1Q3,A2Q9 and/or associated components defective.	Replace.
3.	Voltage out of tolerance.	A2A1Q3,A2Q9 and/or associated components defective.	Replace.
2.E.(9)	Sinkrate Comparator Verification		
(a)	Voltage out of tolerance.	(a) A2U2B,A2U2D and/or associated components defective.	Replace.
		(b) Wire from J5-Y to J2-16 is broken.	Replace.
		For model -087 only - A2A1Q4 and/or associated components defective.	Replace.
(b)	AURAL light is off.	A1U7B defective.	Replace.

TEST STEP	TROUBLE	PROBABLE CAUSE	CORRECTION
2.E.(9)	Sinkrate Comparator Verification (cont'd)		
(b) (cont'd)	HI SINK indicator is black.	(a) Wire from J3-V to J11-17 is broken.	Replace.
		(b) A5U6A,A7B1,A7M1 and/or associated components defective.	Replace.
	Voltage at ATE 61 is high.	A5U6A,A7M1 and/or associated components defective.	Replace.
(c)	Voltage out of tolerance.	A2R163,A2U3D,A2U2B and/or associated components defective.	Replace.
(d)	Voltage out of tolerance.	A2Q4,A2Q5,A2U7A,A2U7B, A2U4D and/or associated components defective.	Replace.
(e)	Voltage out of tolerance.	A2R61 thru A2R65,A2U2B, A2U2D and/or associated components defective.	Replace.
		For model -087 only - A2A1Q4 and/or associated components defective.	Replace.
(f)	Voltage out of tolerance.	A2R42,A2R82,A2R84, A2R85,A2R86,A2R110, A2R112,A2U4D,A2U7A and/or associated components defective.	Replace.
(g)1.	Voltage is high.	A2R150,A2R151,A2R152, A2R154,A2U5A and/or associated components defective.	Replace.
(g)2.	Voltage is high.	A6U3B,A6U2B and/or associated components defective.	Replace.
(h)	Voltage out of tolerance.	A2R63,A2R64,A2U2B,A2U2D, and/or associated components defective.	Replace.
		For model -087 only - A2A1Q4 and/or associated components defective.	Replace.

TEST STEP	TROUBLE	PROBABLE CAUSE	CORRECTION
2.E.(9)	Sinkrate Comparator Verification (cont'd)		
(i)	Voltage out of tolerance.	A2R42,A2R82 thru A2R86 A2R110,A2R112,A2U7B and/or associated components defective.	Replace.
(j)	Voltage out of tolerance.	A2R63,A2R64,A2R65,A2U2B, A2U2D and/or associated components defective.	Replace.
		For model -087 only - A2A1Q4 and/or associated components defective.	Replace.
2.E.(10)	Sinkrate Inhibit Logic		
(a)	AURAL light is on.	A2Q4 defective.	Replace.
(b)	GPWS VAL light is off.	A3CR15 and/or A3U8A defective.	Replace.
(c)	Time out of tolerance.	A1C5,A1R21,A1R26,A1R27 A3C19 and/or A3VR17 defective.	Replace.
(d)	AURAL light off.	A1U7B,A2R155,A2R156, A2R157,A2R159 and/or A2U6D defective.	Replace.
2.E(11)	Radio Comparator Verification (2450 Feet)		
(a)	Voltage out of tolerance.	A2R155,A2R156,A2R157 and/or A2R159 defective.	Replace.
(b)	Voltage out of tolerance.	A2R157 and/or A2R159 defective.	Replace.
	Steps (c)1. thru (c)4. below are applicable to model -087 only.		
(c)1. thru (c)4.	Voltage out of tolerance.	A2A1Q4,A2U2D,A2U2B and/or associated components defective.	Replace.

TEST STEP	TROUBLE	PROBABLE CAUSE	CORRECTION
2.E.(12)	Airborne Self Test Logic		
(a)	No probable trouble or cause.		
(b)	No response.	A1CR39,A1U1C,A1U2A and/or A1U2D defective.	Replace.
	Time out of tolerance.	A1C5,A1R21,A1R26,A1R27 and/or A1U1C defective.	Replace.
	EVENT light is on.	A1CR18 and/or A1U8B defective.	Replace.
	G/S light is off.	See below.	
	Connect DVM HI (+) lead to ATE 17 and proceed as noted below.		
	Voltage at ATE 17 is +12 vdc minimum.	A6A12,A6U3B and/or A6U7B defective.	Replace.
	Voltage at ATE 17 +1 vdc maximum.	A1Q21,A6Q2,A6Q3,A6Q6, A6Q7 and/or A6U4A defective.	Replace.
	GPWS VAL light is off.	A1CR31 defective.	Replace.
(c)	AURAL light is on.	A1U4B, A1U6D and/or A1U6E defective.	Replace.
(d)	AURAL light is off.	A1CR15 defective.	Replace.
	No "glideslope" voice.	A4U6B, A4U9C, A4U9D, A4U10B, A4U10C, A4U3B, A4U12, A4U20, A6Q8, A6Q9, A6Q10, Q6Q11, A6U5C and/or A6U5D defective.	Replace.
	No "whoop-whoop".	A4R63, A4U5, A4U11A, A4U11C and/or A4U19 defective.	Replace.
	No "pull-up" or "terrain"	A4A1U1, A4A1U2, A4U5, A4U11A, A4U11C, and/or A4U21 defective.	Replace.

TEST STEP	TROUBLE	PROBABLE CAUSE	CORRECTION
2.E.(12)	Airborne Self Test Logic (cont'd)		
(d) (cont'd)	No voice warnings.	A4U6A, A4U7, A4U8, A4U12 A4U13, U4U14A, A4U15, A4U16, A4U17, A4U18, A4Q1, ARQ2, A3U5 and/or A3U6 defective.	Replace.
2.E.(13)	Radio Comparator Verification (1000 Feet)		
(a)	Voltage out of tolerance.	A2CR24,A2R150,A2R151, A2R152,A2R154,A2U5A and/or associated components defective.	Replace.
	AURAL light is on.	A2U6B defective.	Replace.
(b)	Voltage out of tolerance.	A2CR24,A2R150,A2R151, A2R152,A2R154,A2U5A, and/or associated components defective.	Replace.
2.E.(14)	Airborne Self Test Inhibit Logic		
(a)	AURAL light is on.	(a) A1CR2, A1R3 and A1U1A defective.	Replace.
		(b) Wire from J1B-16 to J3-FF is broken.	Replace.
(b)	AURAL light is on.	(a) A1CR1 and A1U14 defective.	Replace.
		(b) Wire from J1B-8 to J3-JJ is broken.	Replace.
	Time out of tolerance.	A1C2, A1C5 and A1R21 defective.	Replace.
	GPWC VAL light is off.	A1U1A and/or associated components defective.	Replace.
(c)	AURAL and G/S lights are on.	A5CR15,A5Q2 and A5R49 defective.	Replace.

TEST STEP	TROUBLE	PROBABLE CAUSE	CORRECTION
2.E.(14)	Airborne Self Test Inhibit Logic (cont'd)		
(c) (cont'd)	Computer RADIO ALT light is on.	A5R53, A5R55,A5R56, A5R96,A5U2D,A7DS4 and/ or A7M3 defective.	Replace.
(d)	Time out of tolerance.	A5C2,A5R16, A5R17, A5R18 and/or A1R19 defective.	Replace.
(e)	AURAL light is on.	A1CR29, A1Q3 and/or A1Q5 defective.	Replace.
	G/S light is off.	A1CR26 defective.	Replace.
(f)	Time out of tolerance.	A1C12, A1R66, A1R68 and/or A1R69 defective.	Replace.
2.E.(15)	Radio Comparator Verification (700 Feet)		
(a)	Voltage out of tolerance.	A2CR23,A2R145,A2R146, A2R148,A2R149,A2U5C and/or associated components defective.	Replace.
(b)	Voltage out of tolerance.	A2R148 and/or A2R149 defective.	Replace.
2.E.(16)	Closure Time Constant Verification		
(a)	Voltage out of tolerance.	A2Q6,A2Q7,Q2R50,A2R51, A2R52,A2R53,A2R95,A2R96, A2R97,A2R103,A2R161, A2U6A,A2U26, and/or A2U6B defective.	Replace.
(b)	Voltage at ATE 25 out of tolerance.	A2R59,A2R60 and/or A2R105 defective.	Replace.
	Voltage at ATE 14 is low.	A2R73 and/or A2R74 defective.	Replace.

TEST STEP	TROUBLE	PROBABLE CAUSE	CORRECTION
2.E.(16)	Closure Time Constant Verification (cont'd)		
(c)	Voltage at ATE 25 out of tolerance.	A2Q8,A2R104 and/or A2R105 defective.	Replace.
	Voltage at ATE 14.	A2R73,A2R74,A2R77, A2R78,A2R81 and/or A2R164 defective.	Replace.
	AURAL light is off.	A1CR41 defective.	Replace.
	TERRAIN (2) indicator is black.	A5U5D,A7B2 and/or A7M1 defective.	Replace.
	Voltage at ATE 62 is out of tolerance.	A10R2,A7M1 and/or associated components defective.	Replace.
2.E.(17)	Radio Comparator Verification (300 Feet)		
(a)	Voltage out of tolerance.	A6R65,A6R66,A6R79, A6R80 and/or A6U7B defective.	Replace.
(b)	Voltage out of tolerance.	A6R65 and/or A6R66 defective.	Replace.
2.E.(18)	Radio Comparator Verification (200 Feet)		
(a)	Voltage out of tolerance.	A2CR22,A2R140,A2R142, A2R144,A2U5B and/or associated components defective.	Replace.
(b)	Voltage out of tolerance.	A2R142 and/or A2R144 defective.	Replace.
2.E.(19)	Radio Rate Limits and Bias Circuit Verification		
(a)	Voltage at ATE 22 out of tolerance.	A2R47, A2R49 and/or associated components defective.	Replace.
(b)	Voltage at ATE 22 out of tolerance.	A2Q7,A2R102,A2U6A and/or associated components defective.	Replace.

TEST STEP	TROUBLE	PROBABLE CAUSE	CORRECTION
2.E.(19)	Radio Rate Limits and Bias Circuit Verification (cont'd)		
(c)	Voltage at ATE 23 out of tolerance.	A2Q6,A2R100 and/or A2U6B defective.	Replace.
(d)	Voltage at ATE 22 out of tolerance.	A2R100 defective.	Replace.
2.E.(20)	Closure Comparator Verification (CW)		
(a)	Voltage at ATE 21 out of tolerance.	A2R73,A2R74,A2R77, A2R78,A2R81,A2R164, A2AR3,A2U3C and/or associated components defective.	Replace.
(b)	Voltage at ATE 21 out of tolerance.	A2R77,A2R78,A2R81 and/ or A2R164 defective.	Replace.
2.E.(21)	Radio Comparator Verification (50 Feet)		
(a)	Voltage at BP-20 out of tolerance.	A2CR21,A2R135,A2R136, A2R138,A2R139,A2U5D and/or associated components defective.	Replace.
(b)	Voltage at BP-20 out of tolerance.	A2R135,A2R136,A2R138 and/or A2R139 defective.	Replace.
2.E.(22)	Closure Warning Verification		
(b)	Voltage at BP-20 out of tolerance.	A2C5,A2R45,A2AR2 and/or associated components defective.	Replace.
(c)	Voltage at BP-20 out of tolerance.	A2C5,A2R45,A2AR2 and/or associated components defective.	Replace.
(d)	Voltage at BP-20 out of tolerance.	A2Q8,A2R104 and/or A2R105 defective.	Replace.

TEST STEP	TROUBLE	PROBABLE CAUSE	CORRECTION
2.E.(23)	Glideslope Soft Comparator Verification (GSS)		
(a)	Voltage out of tolerance.	(a) A6A1AR1,A6A1Q1, A6A1U1B,A6A2U7A and/or associated components defective.	Replace.
		(b) Wire from J12-30 to J1B-32,J12-29 to J1B-31 and/or J2-17 to J12-10 is broken.	Replace.
2.E.(24)	Glideslope Hard Comparator Verification (GSH)		
(a)	Voltage out of tolerance.	(a) A6A2U7C and/or associated components defective.	Replace.
		(b) Wire from J12-25 to J2-18 is broken.	Replace.
(b)	Voltage out of tolerance.	A6A2R59 and/or A6A2R93 defective.	Replace.
2.E.(25)	Glideslope Warning Logic		
(a)	G/S light is off and no voice.	(a) A6A2K1,A6A2Q4, A6A2U2B,A6A2U4B and/or associated components defective.	Replace.
		(b) Wire from J12-1 to J1B-33 is broken.	Replace.
(b)	G/S light is on.	(a) A6A2U1A and/or associated components defective.	Replace.
		(b) Wire from J1B-2 to J12-18.	Replace.

TEST STEP	TROUBLE	PROBABLE CAUSE	CORRECTION
2.E.(25)	Glideslope Warning Logic (cont'd)		
(c)	No voice begins.	A6A2U1A and/or associated components defective.	Replace.
(d)	G/S light is on.	(a) A6A2CR26,A6A2U1A and/or associated components defective.	Replace.
		(b) Wire from J1A-5 to J12-17 is broken.	Replace.
(e)	G/S light is off.	(a) Wire from J12-19 to J1B-1 is broken.	Replace.
		(b) A6A2U1B and/or associated components defective.	Replace.
		For model -081 only - A6A2U2A and/or A6A2U3C defective.	Replace.
(f)	G/S light is on.	(a) Wire from J12-15 to J1A-3 is broken.	Replace.
		(b) A6A2U1B,A6A2U1C and/or associated components defective.	Replace.
		For model -081 only - A6A2U5B,A6A2U3C and/or A6A2U2A defective.	Replace.
(g)	G/S light is off.	A6A2U1B,A6A2U1C and/or associated components defective.	Replace.
(h)	For models -070,-071, -072,-073,-079 and -087 only - G/S light is off. For model -081 only - G/S light is on.	A6A2U2A, A6A2U3C, A6A2U5B and/or associated components defective.	Replace.
(i)	For models -070,-071, -072,-073,-079 and -087 only - G/S light is on. For model -081 only - G/S light is off.	(a) A6A2U2A,A6A2U3C, A6A2U5B and/or associated components defective.	Replace.
		(b) Wire from J12-6 to J1A-19 and/or J12-7 to J1A-20 is broken.	Replace.

TEST STEP	TROUBLE	PROBABLE CAUSE	CORRECTION
2.E.(25)	Glideslope Warning Logic (cont'd)		
(j)	G/S light is off.	A6A2U2A,A6A2U3C, A6A2U5B and/or associated components defective.	Replace.
(k)	G/S light is on.	(a) A5Q2,A1CR9,A6A2CR8, A6A2U4A and/or associated components defective.	Replace.
		(b) Wire from J11-25 to J3-K is broken.	Replace.
(l)	G/S light is on.	A1CR11 and/or A1U3C defective.	Replace.
(m)	G/S light is on.	A1CR10 and/or A1U4A defective.	Replace.
(n)	G/S light is on.	A6A2U2C,A6A2U4B,A6A2U3A, A6A2Q5,A6A2K1 and/or associated components defective.	Replace.
		For models -081 and -087 only - Wire from J1B-34 is broken.	Replace.
(o)	G/S light is on.	A6A2CR10,A6A2U2B,A6A2Q4, A6A2K1 and/or associated components defective.	Replace.
2.E.(26)	Glideslope Voice Repetition Rate and Amplitude		
(a)	Repetition interal out of tolerance.	(a) A6A2U5D,A6A2U5C, A6A2C23,A6A2R41, A6A2R42 and/or A6A2R43 defective.	Replace.
		(b) Wire from J8-21 to J6-3 is broken.	Replace.

TEST STEP	TROUBLE	PROBABLE CAUSE	CORRECTION
2.E.(26)	Glideslope Voice Repetition Rate and Amplitude		
(a)	Repetition interval out of tolerance.	(a) A6A2U5D,A6A2U5C, A6A2C23,A6A2R41, A6A2R42 and/or A6A2R43 defective.	Replace.
		(b) Wire from J8-21 to J6-3 is broken.	Replace.
	Output voltage out of tolerance.	(a) A3R42 and/or A4A1R68 out of calibration.	Calibrate A3R42 per para.2.F.(3) and A4AR68 per para. 2.F.(1).
		(b) A3U5,A353,A456,A4R60, A4U4A,A4U4D and/or A4U12 defective.	Replace.
(b)	Time out of tolerance.	A6A2R41 thru A6A2R43, A6A2C23 and/or associated components defective.	Replace.
(c)	Time out of tolerance.	A6A2R41 thru A6A2R43, A6A2C2 and/or associated components defective.	Replace.
(d)	Voltage out of tolerance.	(a) A3U6 and/or associated components defective.	Replace.
		(b) Wire from J1A-33 to J6-9 is broken.	Replace.
(e)	Voltage out of tolerance.	A4R58,A4R65,A4U4A,A4U1A, A4U4C,A4U4D,A4U12,A6A2Q1, A6A2Q13 and/or associated components defective.	Replace.
	G/S (5) indicator is black.	A5U5B,A7B5 and/or A7M2 defective.	Replace.
	Voltage at ATE 65 out of tolerance.	A7M2 and/or A4U5B defective.	Replace.
(f)	For models -070,-071, -072,-073,-079, and -081 only - G/S light is off. For model -087 only - G/S light is on.	A6A2C16,A6A2K1,A6A2Q4 and/or A6A2U2D defective.	Replace.

TEST STEP	TROUBLE	PROBABLE CAUSE	CORRECTION
2.E.(26)	Glideslope Voice Repetition Rate and Amplitude (cont'd)		
(g)	Voltage out of tolerance.	A6A2U4C and/or associated components defective.	Replace.
(h)	Voltage out of tolerance.	A6A2U4C and/or associated components defective.	Replace.
(i)	Voltage out of tolerance.	A6A2CR24,A2A1U4C and/or associated components defective.	Replace.
(j)	G/S light is off.	A1CR11,A1U3C and/or A1U5B defective.	Replace.
(k)	G/S light is on.	A1CR8 and/or A1U5B defective.	Replace.
2.E.(27)	High Level Glideslope Input Verification		
(a)	Voltage out of tolerance.	(a) A6A1R10,A6A1R12, A6A2U6B,A6A1U1A and/or associated components defective.	Replace.
		(b) Wire from J1A-22 to J12-27 is broken.	Replace.
(c)	Voltage out of tolerance.	A6A2U6B and/or associated components defective.	Replace.
(d)	Voltage out of tolerance.	A6A2R60,A6A2U6B and/or associated components defective.	Replace.
2.E.(28)	Glideslope Beam Filter Verification		
(a)	Voltage out of tolerance.	A6A1U2B,A6A1U2A, A6A1Q2 and/or associated components defective.	Replace.
(b)	Voltage out of tolerance.	A6A6U1B,A6A1U2B, A6A1U2A and/or associated components defective.	Replace.
(c)	Frequency out of tolerance.	A6A1U1B,A6A1C6,A6A1C7 and/or A6A1C8 defective.	Replace.

TEST STEP	TROUBLE	PROBABLE CAUSE	CORRECTION
2.E.(28)	Glideslope Beam Filter Verification (cont'd)		
(d)	Frequency out of tolerance.	A6A1U2B,A6A1C10, A6A1C11,A6A1C12 and/or associated components defective.	Replace.
(e)	G/S light stays off.	A6A2C24,A6A2U6A and/or associated components defective.	Replace.
	G/S light stays on.	A6A2U6A,A6A2U6C and/or associated components defective.	Replace.
(f)	Voltage out of tolerance.	A6A2C24,A6A2R74 and/or associated components defective.	Replace.
(g)	Time out of tolerance.	A6A2C24,A6A2R74,A6A2U4A and/or associated components defective.	Replace.
(h)	G/S light is on.	A6A2U4A defective.	Replace.
2.E.(29)	Ground Self Test Verification		
(a)	All indicators are white.	(a) A7B1 thru A7B5 and/or A7S2 defective.	Replace.
		(b) Associated wiring is broken.	Replace.
(b)1.	No glideslope voice.	(a) A1U1C,A6A1Q1,A6A2Q6, A6A2U7D,A6A2U3D, A6A2U5A and/or associated components defective.	Replace.
		(b) Wire from J1B-22 to J3-PP is broken.	Replace.
(b)2.	Multimeter does not switch low.	A6U1C,A2Q3 and/or A2U4B defective.	Replace.

TEST STEP	TROUBLE	PROBABLE CAUSE	CORRECTION
2.E.(29)	Ground Self Test Verification (cont'd)		
(b)3.	AURAL light is off.	A1U2A and/or A1U1C defective.	Replace.
(b)4.	No "whoop-whoop pull-up" or "whoop-whoop terrain".	A1U1C,A3R54,A3CR12,A3CR14, A3R62,A4R20,A5R22,A5R24, A5R26,A5R28,A5R57,A5R93, A5U2C and/or A5U4A defective.	Replace.
(b)5.	Last "pull-up" or "terrain" not completed.	A1U1C and/or A4U10A defective.	Replace.
(c)1.	EVENT light is on.	A1CR17,A1U3A,A1U1B and/ or associated components defective.	Replace.
(c)2.	GPWS VAL light is off.	A1U6C and/or A1U2C defective.	Replace.
(c)3.	G/S light is off.	A1U3C,A6U7D and/or associated components defective.	Replace.
(c)4.	All indicators are white.	A5U4B,A5U4D,A5U4C, A5U5A and/or associated components defective.	Replace.
(d)	Voltage at ATE 20 out of tolerance.	A2R34,A2R39,A2U4B and/or associated components defective.	Replace.
	Voltage at ATE 29 out of tolerance.	A3R62 defective.	Replace.
(e)	AURAL light is on.	A1U2A,A1U3B and/or associated components defective.	Replace.
2.E.(30)	Front Panel Ground Self Test		
(a)	All computer lights do do not come on.	(a) A5C11 and/or A5U1D defective.	Replace.
		(b) Wire from J3-VV to J11-22 is broken.	Replace.

TEST STEP	TROUBLE	PROBABLE CAUSE	CORRECTION
2.E.(30)	Front Panel Ground Self Test (cont'd)		
(a) (cont'd)	Some computer lights do not come on.	A7 lamp transistor and/ or A5 associated lamp drivers defective.	Replace.
(b)	All indicators black.	A1CR19 and/or A4U4B defective.	Replace.
2.E.(31)	Front Panel System Fault Isolation (Flaps Down)		
(a)	All indicators not black.	A7S2 defective.	Replace.
(b)1.	No glideslope voice.	A7S1,A5CR19,A1CR12 and/or associated components defective.	Replace.
(b)2.	FLAP DN light is off.	A5R30,A5R31,A5U1B,A7DS5 and/or A7M3 defective.	Replace.
(b)3.	TERRAIN (2) indicator is white.	A5U4B,A5U4D,A5U4C, A5U5A and/or associated components defective.	Replace.
(b)4.	GPWC OK light is on.	A5R8,A5R9,A5R10 and/or A5U1C defective.	Replace.
(c)1.	HI SINK (1) indicator is black.	A5U4B,A5U4D,A5U4C,A5U5A and/or associated components defective.	Replace.
(c)2.	TERRAIN (2) indicator is white.	A1U3D,A2Q6 and/or A2U6B defective.	Replace.
(c)3.	TAKE OFF (3) indicator is white.	A1U5A and/or A1U5C defective.	Replace.
(c)4.	GEAR/FLAP (4) indicator is white.	A1U7A defective.	Replace.
(c)5.	G/S (5) indicator is black.	A5CR22 and/or A5U4D defective.	Replace.
2.E.(32)	Fault Isolation (Gear Up)		
(a)	All indicators not black.	A7S2 defective.	Replace.

TEST STEP	TROUBLE	PROBABLE CAUSE	CORRECTION
2.E.(32)	Fault Isolation (Gear Up) (cont'd)		
(b)1.	"Glideslope" voice is heard.	A1CR10 and/or A1U4D defective.	Replace.
	"Whoop Whoop Pull-UP" is heard.	A1CR7,A1R15,A1U4B and/or A1U6D defective.	Replace.
(b)2.	GEAR light is off.	A5R32 and/or A5U1A defective.	Replace.
(b)3.	TERRAIN (2) indicator is black.	A5U4B,A5U4D,A5U4C, A5U5A and/or associated components defective.	Replace.
(b)4.	GPWC OK light is off.	A5U1C and/or associated components defective.	Replace.
(c)1.	HI SINK (1), TERRAIN (2), TAKE OFF (3) and GEAR FLAP (4) indicators are black.	A5U4B,A5U4A and/or associated components defective.	Replace.
(c)2.	G/S (5) indicator is white.	A1CR10 and/or A1U4A defective.	Replace.
2.E.(33)	Fault Isolation (Altimeter Failure)		
(a)	All indicators not black.	A7S2 defective.	Replace.
(b)1.	RADIO ALT light is off.	A5CR15,A5R49,A5R53, A5R54,A5R55,A5R56,A5R58, A5R96 and/or A5U2D defective.	Replace.
(b)2.	TERRAIN (2) indicator is black.	A5U5D,A5U5A and/or associated components defective.	Replace.
(b)3.	GPWC OK light is on.	A5CR11 and/or A5R48 defective.	Replace.
(b)4.	Audio output from speaker.	A5Q2 and/or associated components defective.	Replace.
(c)2.	G/S (5) indicator is white.	A1CR9 defective.	Replace.

TEST STEP	TROUBLE	PROBABLE CAUSE	CORRECTION
2.E.(34)	Fault Isolation (Baro Rate Failure)		
(a)	All indicators not black.	A7S2 defective.	Replace.
(b)1.	AIR DATA light is off.	A5R2,A5R5 and/or A5U2A defective.	Replace.
(b)2.	TERRAIN (2) indicator is black.	A5U5A,A5U4C and/or associated components defective.	Replace.
(b)3.	GPWC OK light is on.	A1CR29 defective.	Replace.
(c)1.	HI SINK (1) indicator is white.	A1U7B defective.	Replace.
(c)2.	TERRAIN (2) indicator is black.	A5U5A,A5U4C and/or associated components defective.	Replace.
(c)3.	TAKE OFF (3) indicator is white.	A1CR34 defective.	Replace.
(c)4.	GEAR/FLAP (4) indicator is black.	A5U5A,A5U4C and/or associated components defective.	Replace.
(c)5.	G/S (5) indicator is black.	A5U5,A5U4C and/or associated components defective.	Replace.
2.E.(35)	Fault Isolation (GPWC Failure)		
(a)	All indicators not black.	A7S2 defective.	Replace.
(b)	GPWC OK light on.	A5U2C and/or associated components defective.	Replace.
(c)1.	HI SINK (1) indicator is black.	A5U5A and/or associated components defective.	Replace.
(c)2.	TERRAIN (2) indicator is white.	A2R59 and/or associated components defective.	Replace.
(c)3.	TAKE OFF (3) indicator is black.	A5U5A,A5U4C and/or associated components defective.	Replace.

TEST STEP	TROUBLE	PROBABLE CAUSE	CORRECTION
2.E.(35)	Fault Isolation (GPWC Failure) (cont'd)		
(c)4.	GEAR/FLAP (4) indicator is black.	A5U5A,A5U4C and/or associated components defective.	Replace.
(c)5.	G/S (5) indicator is black.	A5U5A,A5U4C and/or associated components defective.	Replace.
2.E.(36)	Fault Isolation (Glideslope Signal Wiring Failure		
(a)	Voltage out of tolerance and for models -071,-072, -073,-079 and -081 only - G/S VAL light is off. For models -070 and -087 only - G/S VAL light is on.	(a) A6A2U6D,A6A2R52, A6A2R53 and/or A6A1R7 defective. (b) Wire from J12-4 to J11-8 and J11-19 to J3-T is broken.	Replace. Replace.
(b)	For models -071,-072, -073,-079 and -081 only - G/S VAL light is off. For models -070 and -087 only - G/S VAL light is on.	A6A1R6 defective.	Replace.
(c)	For models -071,-072, -073, -079 and -081 only - G/S VAL light is off. For models -070 and -087 only - G/S VAL light is on.	A6A1R6 and/or A6A1R13 defective.	Replace.
(d)	For models -071,-072, -073, -079 and -081 only - G/S VAL light is off. For models -070 and -087 only - G/S VAL light is on.	A6A1R11 defective.	Replace.
(e)	All indicators not black.	A7S2 defective.	Replace.

TEST STEP	TROUBLE	PROBABLE CAUSE	CORRECTION
2.E.(36)	Fault Isolation (Glideslope Signal Wiring Failure) (cont'd)		
(f)	G/S (5) indicator is white.	A6A1R7 defective.	Replace.
	TERRAIN (2) indicator is black.	A6A1R7 defective.	Replace.
	GPWC OK light is off.	A6A1R7 defective.	Replace.
2.E.(37)	Internal Computer Power Monitor Verification		
(a)	GPWS VAL light does not come on.	(a) A1CR5,A1Q2 and/or A1Q3 defective.	Replace.
		(b) Wire from J2-33 to J3-Y is broken.	Replace.
	Time out of tolerance.	A1C7 and/or A1R36 defective.	Replace.
(b)	GPWS VAL light is off.	(a) A1CR6,A1Q4 and/or A1Q5 defective.	Replace.
		(b) Wire from J2-34 to J3-P defective.	Replace.
	Time out of tolerance.	A1C7 and/or A1R36 defective.	Replace.
2.E.(38)	Radio Altimeter Wiring Verification		
(a)	HI SINK (1) indicator is black.	A5Q4,A5U3C,A5U6C and/or A5Q2 defective.	Replace.
(b)	Indicators are not all black.	A5Q4,A5U3C,A5U6C and/or A5Q2 defective.	Replace.
(c)	GPWS VAL light is on.	A5R13,A5R15,A5U3B and/or associated components defective.	Replace.
(d)	GPWS VAL light is off.	A5R14,A5U3B and/or associated components defective.	Replace.
(e)	GPWS VAL light is on.	A5R13,A5R14,A5R15,A5U3B and/or associated components defective.	Replace.

TEST STEP	TROUBLE	PROBABLE CAUSE	CORRECTION
2.E.(38)	Radio Altimeter Wiring Verification (cont'd)		
(e) (cont'd)	Time out of tolerance.	A1C3 and/or associated components defective.	Replace.
(f)	Voltage out of tolerance.	A1U2D,A1U3A,A1U6B, A6A2U3B and/or A6A2Q12 defective.	Replace.
2.E.(39)	Auxiliary AC Baro Rate Input		
(a)	For models -071,-072, -073 and -079 only - Voltage out of tolerance.	(a) A3C1,A3C4,A3R1,A3R4, A3U4A,A3U2B,A3U3B and/or associated components defective.	Replace.
		(b) Wire from J1B-35 to J6-26 and/or J1B-36 to J6-23 is broken.	Replace.
(b)	AURAL light is off.	Same as (a) and (b) above.	Replace.
2.E.(40)	Primary Power Monitor Verification		
(a)	Voltage out of tolerance.	A5CR10,A5VR3,A5Q1 and/or associated components defective.	Replace.
2.E.(41)	Audio Output Verification		
(a)	Voltage out of tolerance.	A3T2,A3U5,A3R42,A4U12, A4R65,A4Q4,A4Q3,A4U9E, A4U3C,A4R53,A4R60 and/or A4R59 defective.	Replace.
(b)	Voltage out of tolerance.	A4Q3,A4Q4,A4U9E and/or A4U3C defective.	Replace.
(c)	Time out of tolerance.	(a) A4U9F,A4U3C,A4R35, and/or A4R27 defective.	Replace.
		(b) A4R24 and/or A4R26 out of calibration.	Calibrate per para. 2.F.(1).

TEST STEP	TROUBLE	PROBABLE CAUSE	CORRECTION
2.E.(41)	Audio Output Verification (cont'd)		
(d)	Time out of tolerance.	(a) A4R26,A4R27,A4U3C and/or A4U9F defective.	Replace.
		(b) A4R26 and/or A4R46 out of calibration.	Calibrate per para. 2.F.(1).
(e)	Voltage out of tolerance.	A3T1 and/or A3R35 defective.	Replace.
(f)	Voltage out of tolerance.	(a) A3U6 defective.	Replace.
		(b) A3R43 out of calibration.	Calibrate per para. 2.F.(3).
(g)	Voltage out of tolerance.	A3T3 defective.	Replace.
(h)	Voltage out of tolerance.	A3T3 and/or A3U5 defective.	Replace.
(i)	Voltage out of tolerance.	(a) A4U1E,A4U2 and/or A4U4A defective.	Replace.
		(b) A4R62 out of calibration.	Calibrate per para. 2.F.(1).
2.E.(42)	Flashing Output Lamp Verification		
(a)	Time out of tolerance.	A1C9,A1R54,A1R56 and/or A1R59 defective.	Replace.
(b)	Time out of tolerance.	A1CR47,A1U8C and/or associated components defective.	Replace.
(c)	For model -073 only - AURAL light is off.	(a) A4A2U3B and/or associated components defective.	Replace.
		(b) Wire from J6-11 to J8-28 is broken.	Replace.

TEST STEP	TROUBLE	PROBABLE CAUSE	CORRECTION
2.E.(43)	Self Test Inhibit Verification		
(c)	Voltage is high.	A2U4B,A1CR37,A4U3D and/or associated components defective.	Replace.
(d)	For models -070,-071, -072,-073,-079 and -081 only - AURAL light comes on.	A1U1A, A1U6B and/or associated components defective.	Replace.
	For model -087 only - AURAL light is off.	A1CR3,A1U1A and/or associated components defective.	Replace.
(e)	For models -070,-071, -072,-073,-079 and -081 only - there is no delay before audio warning.	A1U1A,A1U6B and/or associated components defective.	Replace.
	For model -087 only - there is no audio warning.	A1CR3,A1U6A and/or associated components defective.	Replace.
(f)	For model -070 only - DVM indicates greater than 3.0 ohms.	Wire from J1A-38 to K2-1 is broken.	Replace.
2.E.(44)	For Model -073 Only, Synchro Demodulator Tests		
(a)	Voltage out of tolerance.	See below.	
	Perform test steps 2.E.(44)(j) and (k) and proceed as noted below.		
	Voltage within tolerance in steps (j) and (k).	A4A2U1B,A4A2R56 and/or A4A2R57 defective.	Replace.
	Voltage out of tolerance in steps (j) and (k).	(a) A4A2U2,A4A2R16 and/or A4A2R19 defective.	Replace.
		(b) Wire from J1A-9 to J8-22,J1A-8 to J8-23, J1A-10 to J8-24, J2-51 to J8-27 and/or wires E22 and E23 is broken.	Replace.

TEST STEP	TROUBLE	PROBABLE CAUSE	CORRECTION
2.E.(44)	For Model -073 Only, Synchro Demodulator Tests (cont'd)		
(b)	Voltage out of tolerance.	See below.	
	Connect oscilloscope (-) lead to ATE 7 and (+) lead to ATE 51 and proceed as noted below.		
	Voltage in step (b) is -100 to +100 mvdc plus a clean sine wave (not chopped) AC signal of 0.15 to 1.50 volts peak-to-peak at 400 Hz.	See below.	
	Perform test Steps (j) and (k) and proceed as noted below.		
	Voltage out of tolerance in steps (j) and (k).	A4A2U1A defective.	Replace.
	Voltage within tolerance in steps (j) and (k).	A4A2U1C,A4A2U3C,A4A2Q1, A4A2CR1,A4A2R7,A4A2R13 and/or A4A2R53 defective.	Replace.
	Voltage in step (b) is wrong polarity.	A4A2U2D,A4A2CR1,A4A2R11 and/or A4A2R12 defective.	Replace.
	Voltage in step (b) is low.	(a) A4A2R85 out of calibration.	Calibrate per para. 2.F.(1).
		(b) A4A2U1A,A4A2U1D, A4A2VR1,A4A2R1 thru A4A2R6,A4A2R60 and/ or A4A2R61 defective.	Replace.
		(c) Wire E27 is broken.	Replace.
	Voltage in step (b) is high.	(a) A4A2R85 out of calibration.	Replace.
		(b) A4A2U1A,A4A2U1C, A4A2CR1,A4A2R1 thru A4A2R6,A4A2R11 and/ or A4A2R58 defective.	Replace.

TEST STEP	TROUBLE	PROBABLE CAUSE	CORRECTION
2.E.(44)	For Model -073 Only, Synchro Demodulator Tests (cont'd)		
(b) (cont'd)		(c) A4A2U1D,A4A2CR11, A4A2CR12,A4A2R59 thru A4A2R61 and/or A4A2R87 defective.	Replace.
		(d) A4A2U2D defective.	Replace.
(c)	Voltage out of tolerance.	A4A2U1D,A4A2CR12, A4A2CR13,A4A2R59, A4A2R61 and/or A4A2R63 defective.	Replace.
(d)	Voltage out of tolerance.	A4A2CR11 and/or A4A2U1B defective.	Replace.
(e)	Voltage out of tolerance.	A4A2U1C,A4A2CR1,A4A2R11 and/or A4A2VR1 defective.	Replace.
(f)	Voltage out of tolerance.	See probable cause and correction under test step (a).	
(g)	Voltage out of tolerance.	See probable cause and correction under test step (b).	
(h)	Voltage out of tolerance.	See probable cause and correction under test step (d).	
(i)	Voltage out of tolerance.	A4A2U1A,A4A2CR11,A4A2CR13, A4A2R59,A4A2R61,A4A2R62 and/or A4A2R63 defective.	Replace.
(j)	Voltage out of tolerance.	A4A2U2C,A4A2R40 and/or A4A2R41 defective.	Replace.
(k)	Voltage out of tolerance.	See below.	
	Connect oscilloscope (-) lead to ATE 7 and (+) lead to ATE 52 and proceed as noted below.		
	Voltage in step (k) is -100 to +100 mvdc plus a clean sine wave (not chopped) AC signal of 0.15 to 1.50 volts peak-to-peak at 400 Hz.	A4A2U2B,A4A2R22, A4A2CR2,A4A2Q2 and/or A4A2R20 defective.	Replace.

TEST STEP	TROUBLE	PROBABLE CAUSE	CORRECTION
2.E.(44)	For Model -073 Only, Synchro Demodulator Tests (cont'd)		
(k) (cont'd)	Voltage in step (k) is wrong polarity.	A4A2R24,A4A2R25 and/or A4A2CR2 defective.	Replace.
	Voltage in step (k) is low.	(a) A4A2R84 out of calibration.	Calibrate per para. 2.F.(1).
		(b) A4A2VR2,A4A2U2A, A4A2R46,A4A2R48 and/or A4A2R86 defective.	Replace.
		(c) Wire E25 is broken.	Replace.
	Voltage in step (k) is high.	(a) A4A2R84 out of calibration.	Calibrate per para. 2.F.(1).
		(b) A4A2U2A,A4A2U2B, A4A2CR2,A4A2CR8, A4A2CR9,A4A2R24, A4A2R44,A4A2R45, A4A2R46 and/or A4A2R48 defective.	Replace.
(l)	Voltage out of tolerance.	A4A2CR9 and/or A4A2U2C defective.	Replace.
(m)	Voltage out of tolerance.	A4A2U2A,A4A2CR8,A4A2CR9, A4A2R45,A4A2R47,A4A2R48 and/or A4A2R49 defective.	Replace.
(n)	Voltage out of tolerance.	See probable cause and correction under test step (j).	
(o)	Voltage out of tolerance.	See probable cause and correction under test step (k).	
(p)	Voltage out of tolerance.	A4A2U2A,A4A2CR8,A4A2CR10, A4A2R45,A4A4R47,A4A2R48 and/or A4A2R49 defective.	Replace.
(q)	Voltage out of tolerance.	See probable cause and correction under test step (l).	
(r)	Voltage out of tolerance.	A4A2U2B,A4A2CR2,A4A2R24 and/or A4A2VR2 defective.	Replace.

TEST STEP	TROUBLE	PROBABLE CAUSE	CORRECTION
2.E.(44)	For Model -073 Only, Synchro Demodulator Tests (cont'd)		
(s)	Voltage out of tolerance.	A4A2AR2,A4A2R70,A4A2R75 A4A2CR6,A4A2CR7 and/or A4A2Q3B defective.	Replace.
(t)	Voltage is +0.407 to +0.444 vdc.	(a) A4A2Q3B and/or A4A2Q5 defective.	Replace.
		(b) Wire E29 is broken.	Replace.
	Voltage out of tolerance.	(a) A4A2AR2,A4A2C10, A4A2Q3A,A4A2R51, A4A2R69 thru A4A2R1 and/or A4A2R78 defective.	Replace.
		(b) Wires E26 and E30 broken.	Replace.
(u)	Voltage out of tolerance.	A4A2AR2 and/or A4A2R74 defective.	Replace.
(v)	Voltage out of tolerance.	A4A2R1,A4A2C9,A4A2Q4, A4A2R50,A4A2R64 thru A4A2R66 and/or A4A2R83 defective.	Replace.
(w)	Voltage out of tolerance.	A4A2AR1 and/or A4A2R35 defective.	Replace.
(x)	Voltage out to tolerance.	A4A2Q3B,A4A2Q5,A4A2R79, A4A2R80 and/or A4A2R82 defective.	Replace.
(y)	Voltage out of tolerance.	See probable cause and correction under test step (x).	
(z)	Voltage out of tolerance.	A4A2CR7,A4A2CR15,A4A2R68, A4A2R73,A4A2R74 and/or A4A2R83 defective.	Replace.
(aa)	Voltage out of tolerance.	A4A2CR6,A4A2CR14,A4A2R35, A4A2R67,A4A2R71 and/or A4A2R72 defective.	Replace.

TEST STEP	TROUBLE	PROBABLE CAUSE	CORRECTION
2.E.(44)	For Model -073 Only, Sycnhro Demodulator Tests (cont'd)		
(ab)	Discontinuities occur.	A4A2U3A,A4A2Q3A, A4A2Q4,A4A2CR4,A4A2CR5, A4C2R33,A4A2R34,A4A2R36, A4A2R76 and/or A4A2R77 defective.	Replace.
(ac)	Time out of tolerance.	A4A2C8 and/or A4A2C12 defective.	Replace.
(ad)	Time out of tolerance.	A4A2C9 and/or A4A2C11 defective.	Replace.

3. Functional Test, Calibration and Troubleshooting with Tester, Part No. 951-0192-XXX.

A. General

This section presents the procedures for testing and troubleshooting the GPWC with Sundstrand Data Control Tester, Part No. 951-0192-XXX .

B. Test Equipment and Power Requirements

NOTE: Test equipment substitution is permissible provided that the substituted equipment has an accuracy equal to or greater than the specified equipment.

(1) Test Equipment

The test equipment required is delineated in Fig. 109 and listed in Fig. 901.

(2) Power Requirements

Power requirements are noted in Fig. 109 and listed in Fig. 901.

C. Test Setup

NOTE: Figure 108 delineates the test equipment required and test setup.

(1) Position tester controls as follows:

NOTE: Disregard controls in top section of tester during initial setup.

Control		Position
Synchro Dial (If installed)	These controls are applicable only to tester Part No. 951-0192-002. This tester is required for testing model 073, however, it will also test models 070,071 072, 079 and 081.	$0^{o} \pm 10^{o}$
RAMP		OFF
EIN		$\overline{A}$
EXCT		ON (When testing Part No. 965-0376-073)

Control	Position
GPWC BOARD TEST	
AWO - ON/OFF	OFF
GS VOL - ON/OFF	OFF
SYN VAL - VAL/$\overline{\text{VAL}}$	$\overline{\text{VAL}}$
ACREF - HI/LO	LO
PROGRAM	
FLAP - ON/OFF	OFF
AUDIO - ON/OFF	OFF
LOAD - ON/OFF	OFF
MODE 4 - ON/OFF	OFF
K1F1S - ON/OFF	OFF
Spare - ON/OFF	OFF
ARINC ALT. F. G.	
RATE ADJ	0.0. $\pm$ 0.1
WARN SEL - 1/OFF/2	OFF
RESET - ON/OFF	OFF
COMPUTER INPUTS	
FLAPS 1 - DOWN/UP	UP
FLAPS 2 - DOWN/UP	UP
R/A - $\overline{\text{VAL}}$/VAL	VAL
BARO MON - OFF/ON	ON
(Two spare switches)	
GEAR 1 - DOWN/UP	UP
GEAR 2 - DOWN/UP	UP
CADC - $\overline{\text{VAL}}$/VAL	VAL
SELF TEST - ON/OFF	OFF
PWR MON 1 - ON/OFF	OFF
PWR MON 2 - ON/OFF	OFF
INHIBIT GND - ON/OFF	OFF

Control	Position
INHIBIT +28 - ON/OFF	OFF
GSH - $\overline{\text{VAL}}$/VAL	VAL
GS CANCEL - ON/OFF	OFF
GS INHIBIT - ON/OFF	OFF
GSL - $\overline{\text{VAL}}$/VAL	VAL
GPWC BOARD TEST	
2450 FT - <2450/ >2450	>2450
1000 FT - <1000/ >1000	>1000
700 FT - <700/ >700	>700
TC - <TC/ >TC	>TC
50 FT - <50/ >50	>50
T. OFF - TRUE/FALSE	FALSE
SINK - <SINK/ >SINK	>SINK
CW - CW/$\overline{\text{CW}}$	$\overline{\text{CW}}$
INHIBIT - ON/OFF	OFF
TEST - ON/OFF	OFF
TONE - ON/OFF	OFF
GEAR - UP/DOWN	DOWN
FLAPS - UP/DOWN	DOWN
BARO - TRUE/FALSE	FALSE
LIMIT - GND/OPEN	OPEN
GS - ON/OFF	OFF
INT - ON/OFF	OFF
TEST SIGNAL	
SELECT - C/B/A	A
ADJ	5.0 ± 0.1
Control - ON/OFF (Lower Switch)	OFF

Control	Position
VOLUME ADJ	ON (minimum)
AUDIO OUTPUT - HI/AUX/LO	LO
RADIO ADJ	0.0 ± 0.1
HLD - ON/OFF	OFF
RAMP INPUT - VAR/RAMP/FIXED	FIXED
BARO ADJ	5.0 ± 0.1
CM/NORMAL	NORMAL
FUNCTION - AC/DC	DC
INPUT - VAR/GND	GND
OUTPUT - AC2/AC1	AC1
GLIDESLOPE ADJ	5.0 + 0.1
MODE 1 - VOR/ILS	ILS
GAIN - HI/LO	LO
INH 1 - FRONT/BACK	BACK
MODE 2 - VOR/ILS	ILS
SIGNAL - EXT/NORM	NORM
INH 2 - FRONT/BACK	BACK
METER SELECT	1
FUNCT - AC/DC	DC
INPUT - C/B/A	A
COMP PWR - ON/OFF	OFF
COMP 115 VAC INPUT	70 - 90
TSTR PWR - ON/OFF	OFF

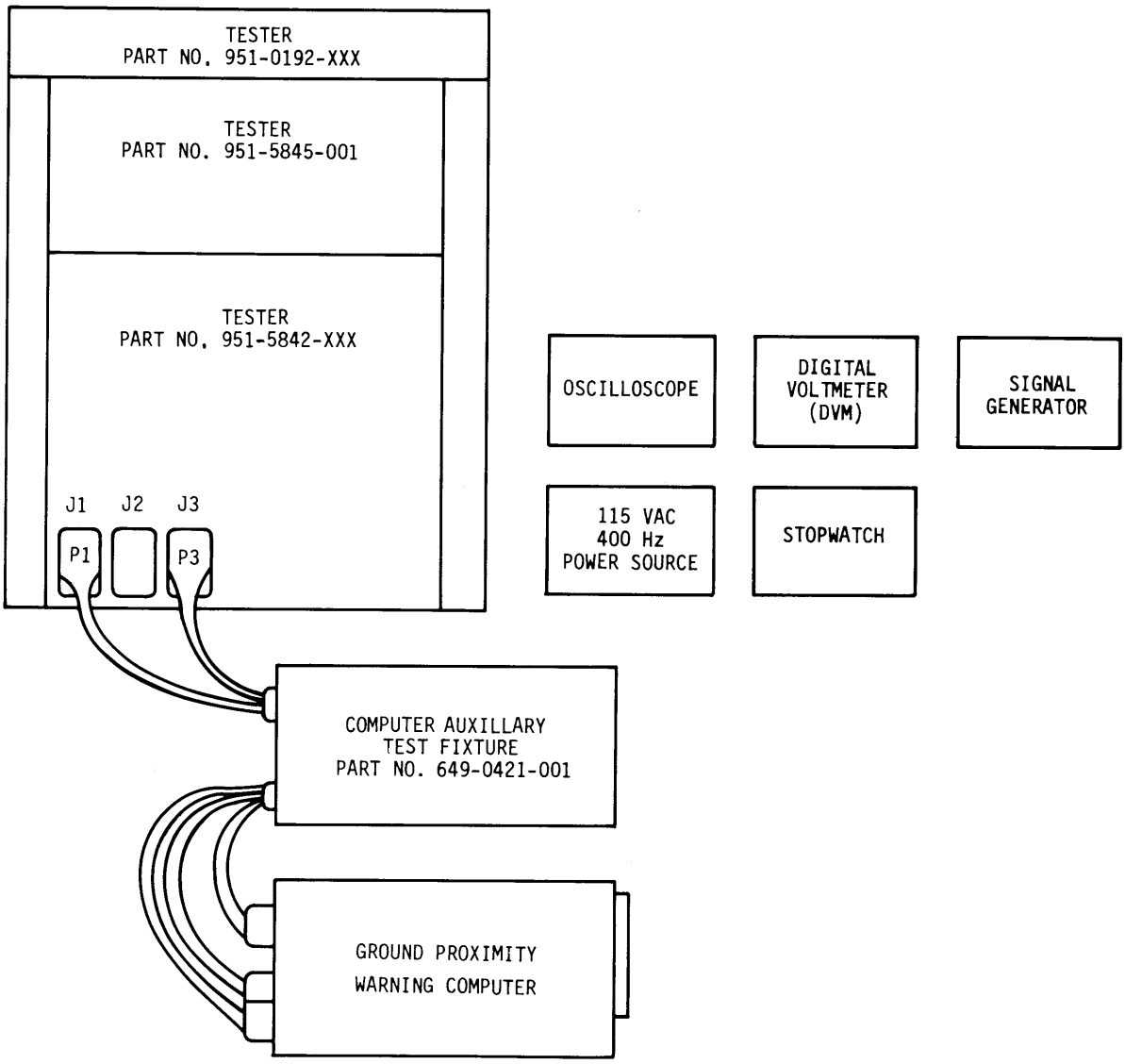

Test Setup
Figure 109

(2) Connect computer auxiliary fixture, Part No. 649-0421-001 to tester connectors, J1 and J3. Secure connectors with jack screws.

(3) Connect computer auxiliary fixture to GPWC.

(4) Connect DVM to tester METER jacks, observe polarity.

(5) Connect tester power cord to 115 vac 400 Hz power source. Adjust the 115 vac source for 115 vac ±1 vac.

NOTE: In the test procedures that follow, change switches and use test equipment only as specified. procedural differences between computers are specified by usage of the term model. That is, model 071 will be specified when the procedural step applies only to Part No. 965-0376-071, model 081 for 965-0376-081, etc.

D. Code Resistor Verification Test

(1) Set DVM to measure ohms.

(2) Set INPUT switch to C.

(3) With METER SELECT switch set at positions noted below, verify the following DVM indications.

	METER SELECT Position		DVM Indication
(a)	1		9.80K to 10.20K
(b)	2		9.80K to 10.20K
(c)	3	Model 070	98 to 102 ohms
	3	Model 071	147 to 153 ohms
	3	Model 072	178 to 186 ohms
	3	Model 073	216 to 226 ohms
	3	Model 087	3.84K to 4K
	3	Model 079	667 to 695 ohms
	3	Model 081	980 ohms to 1.02K
(d)	4		9.80K to 10.20K
(e)	6		9.80K to 10.20K

(f) Set METER SELECT switch to 5 and verify the DVM indication as applicable to a specific Mod as noted in Fig. 110.

NOTE: Prior to verifying the DVM indication at position 5, check unit under test modification plate for proper modification number.

MOD	MODELS						
	070	071	072	073	079	081	087
0	9.80K TO 10.20K	9.80K TO 10.20K	9.80K TO 10.20K	9.80K TO 10.20K	9.80K TO 10.20K	9.80K TO 10.20K	9.80K TO 10.20 K
1	98 TO 102 OHMS	98 TO 102 OHMS	98 TO 102 OHMS	98 TO 102 OHMS	98 TO 102 OHMS	98 TO 102 OHMS	9.80K TO 10.20K
2	147 TO 153 OHMS	147 TO 153 OHMS	147 TO 153 OHMS	147 TO 153 OHMS	147 TO 153 OHMS	147 TO 153 OHMS	147 TO 153 OHMS
3	147 TO 153 OHMS	147 TO 153 OHMS	147 TO 153 OHMS	178 TO 186 OHMS	147 TO 153 OHMS	178 TO 186 OHMS	178 TO 186 OHMS
4	216 TO 226 OHMS	216 TO 226 OHMS	216 TO 226 OHMS	178 TO 186 OHMS	216 TO 226 OHMS	178 TO 186 OHMS	178 TO 186 OHMS
5	268 TO 280 OHMS	268 TO 280 OHMS	268 TO 280 OHMS	268 TO 280 OHMS	268 TO 280 OHMS	268 TO 280 OHMS	
6	268 TO 280 OHMS	268 TO 280 OHMS	268 TO 280 OHMS	268 TO 280 OHMS	268 TO 280 OHMS	325 TO 339 OHMS	
7						325 TO 339 OHMS	
8							
9							
BLANK AREAS WILL BE FILLED IN AS APPLICABLE							

Model/Mod/Resistance
Figure 110

E. Tester Verification

(1) Set TSTR PWR switch to ON. Verify that 115V, +28V, +15V, -15V lights are on.

(2) Set DVM to DC and set INPUT switch to B.

(3) With METER SELECT switch set at positions noted below, verify the following DVM indications.

METER SELECT Position	DVM Indication
2	+27.00 to +31.00 vdc
3	+14.85 to +15.15 vdc
4	-14.85 to -15.15 vdc

F. Functional Test

(1) Initial Voltage Conditions

(a) Set COMP PWR switch to ON. Verify that GPWC STATUS lights +24V, +15V, +5V, -12V, -15V and -24V are on.

(b) If any GPWC STATUS lights noted in step (a) do not come on, set COMP PWR switch to OFF and troubleshoot.

(c) Set METER SELECT switch to 1.

(d) Set INPUT switch to B.

(e) Set FUNCT switch to AC.

(f) Set DVM to AC.

(g) Increase COMP 115 VAC INPUT control for a 114 to 116 vac indication on DVM.

(h) If DVM is low in step (g), with COMP 115 VAC INPUT control at maximum, increase tester input power as required to obtain correct DVM indication. Do not exceed 120 vac tester input voltage.

(i) Set FUNCT switch to DC.

(j) Set DVM to DC.

(k) With METER SELECT switch set at positions noted below, verify the following DVM indications:

	METER SELECT Position	DVM Indication
1.	5	+23.00 to +27.00 vdc
2.	6	+14.92 to +15.08 vdc
3.	7	+4.70 to +5.30 vdc
4.	8	-11.70 to -12.30 vdc
5.	9	-14.92 to -15.08 vdc
6.	10	-23.00 to -27.00 vdc

(l) Set INPUT switch to A.

(m) With METER SELECT switch set at positions noted below, verify the following DVM indications.

	METER SELECT Position	DVM Indication
1.	1	-2 to +18 mvdc
2.	3	-10 to +10 mvdc
3.	4	+0.33 to +0.37 vdc
4.	5	-95 to +95 mvdc
5.	7	-6.075 to -6.375 vdc
6.	9	-100 to +100 mvdc

(2) Initial Logic Conditions

(a) Verify that the following GPWC STATUS lights are as noted below.

	GPWC STATUS Lights	Status
1.	2450 FT	on

	GPWC STATUS Lights	Status
2.	1000 FT	On
3.	700 FT	On
4.	300 FT	On
5.	TC	On
6.	50 FT	On
7.	SINK	Off
8.	CW	Off
9.	FD	Off
10.	GSS	Off
11.	GSH	Off
12.	200 FT	On

(b) Verify that the computer front panel RADIO ALT, GEAR, AIR DATA, FLAP DN, GPWC OK and G/S VAL lights are off.

(c) Set FLAPS 1 switch to DN. Verify that GPWS VAL and GPWC STATUS FD lights are off.

(d) Set FLAPS 2 and GEAR 1 switches to DN. Verify that GPWC STATUS T OFF light is off, FD and GD lights are on and that AURAL, 1, 2, 3, EVENT, GPWS VAL and G/S lights are off.

(e) Set INPUT switch to C.

(f) With METER SELECT switch set at positions noted below, verify the following DVM indication.

	METER SELECT Position	DVM Indication
1.	15	+10.6 to +13.8 vdc
2.	16	+10.6 to +13.8 vdc
3.	17	+10.6 to +13.8 vdc
4.	18	+10.6 to +13.8 vdc
5.	19	+10.6 to +13.8 vdc

(g) For model 070, 071, 073, 087 and 081, momentarily press the computer front panel WARNING MODE RESET switch and verify that computer front panel HI SINK, TERRAIN, TAKE OFF, GEAR/FLAP and G/S indicators are black.

(h) Verify that computer front panel FLAP DN light is off.

(3) Radio Altitude Input to 300 Feet

(a) Set Radio INPUT switch to VAR, INPUT switch to A and METER SELECT switch to 2.

(b) Increase RADIO ADJ control for a DVM indication of between +6.39 and +6.41 vdc.

(c) With METER SELECT switch set at positions noted below, verify the following DVM indications.

	METER SELECT Position	DVM Indication
1.	1	+2.288 to +2.434 vdc
2.	3	-1.223 to -1.139 vdc
3.	4	+0.73 to +0.77 vdc
4.	5	-80 to +80 mvdc
5.	8	-3.499 to -3.101 vdc
6.	12	+13.50 to +15.50 vdc

(d) Verify that GPWC STATUS lights TC, 50 FT and 200 FT are off.

(4) DC Baro Signal Processing

(a) Set METER SELECT switch to 6 and BARO INPUT switch to VAR.

(b) Decrease BARO ADJ control for a DVM indication of between -0.49 and -0.51 vdc.

(c) Set METER SELECT switch to 5. DVM shall indicate between -0.567 and -0.767 vdc.

(d) Set METER SELECT switch to 9. DVM shall indicate between -0.567 and -0.767 vdc. Delay reading until voltage level stabilizes.

(e) Verify that GPWC STATUS T. OFF light is still off five seconds after step (d).

(f) Verify that GPWC STATUS TC light is on and T. OFF and SINK lights are off.

(g) Set GEAR 1 switch to UP. Verify that GPWC STATUS GD light remains on and after approximately 2 seconds T. OFF light comes on.

(h) Allow another one second delay and verify the following. Actual time delays will be measured in a later step.

1. AURAL light - on
2. Light 1 and 2 - on
3. Light 3 - flashing
4. For models 070, 071, 072, 073, 079 and 081, EVENT light - on. For model 87, EVENT light - off.
5. GPWS VAL light - off.
6. For model 070, 071, 073, 081 and 087 computer front panel TAKE OFF indicator - white.
7. Computer front panel GPWC OK light - off.

(i) Set INPUT switch to C and METER SELECT switch to 17. DVM shall indicate between -0.1 and +1.0 vdc.

(j) Increase VOLUME ADJ control as required for speaker to be on. The audio tone from the speaker shall resemble the "whoop-whoop" of a police siren followed by the words "pull-up" for model 070, 071, 072, 073, 087 and 081 or the word "terrain" for model 079. The actual waveform will be checked in a later step.

NOTE: For model 087, the audio volume will automatically reduce after three complete "whoop-whoop pull-up" cycles.

(k) Set INPUT switch to A and METER SELECT switch to 6.

(l) Increase BARO ADJ control for a DVM indication of between +0.09 and +0.11 vdc.

(m) Verify the following.

1. GPWS STATUS T. OFF light - off.
2. AURAL light - off.
3. 1 light - off.
4. 2 light - off.
5. 3 light - off.

6. EVENT light - off.

7. GPWS VAL light - off.

8. G/S light - off.

(n) Increase BARO ADJ control for a DVM indication of between +0.49 and +0.51 vdc.

(o) Set METER SELECT switch to 5. DVM shall indicate between +0.567 and +0.767 vdc.

(p) Set METER SELECT switch to 9. DVM shall indicate between +0.567 and +0.767 vdc. Delay reading until voltage level stabilizes.

(q) Adjust VOLUME ADJ control fully clockwise. The speaker shall be off.

(r) Set RADIO ADJ INPUT switch to FIXED.

(s) Set METER SELECT switch to 5. DVM shall indicate between -95 and +95 mvdc.

(5) AC Baro Signal Processing

(a) Decrease VOLUME ADJ control to normal level.

(b) Set BARO ADJ FUNCTION switch to AC.

(c) Set DVM to AC.

(d) Set INPUT switch to C and METER SELECT switch to 9.

(e) Adjust COMP 115 VAC INPUT control for a DVM indication of 25.8 to 26.2 vac.

(f) If DVM is low in step (e) with COMP 115 VAC INPUT control at maximum, increase tester input power as required to obtain correct DVM indication. Do not exceed 120 vac tester input voltage.

(g) Set INPUT switch to A and METER SELECT switch to 6.

(h) Increase BARO ADJ control for a DVM indication of between 0.245 and 0.255 vac.

NOTE: The BARO ADJ control must remain above 5.0 to obtain AC voltages which are in-phase with the reference voltage.

(i) Set METER SELECT switch to 5.

(j) Set DVM to DC. DVM shall indicate between -95 and +95 mvdc.

(k) Set RADIO INPUT switch to VAR. DVM shall indicate +0.567 to +0.767 vdc.

(l) For model 070, 071, 073, 087 and 081 computer front panel TAKE OFF indicator shall be black.

(m) Set DVM to AC.

(n) Set INPUT switch to C and METER SELECT switch to 9.

(o) Decrease COMP 115 VAC INPUT control for a DVM indication of 19.8 to 20.2 vac.

(p) Set DVM to DC.

(q) Set INPUT switch to A and METER SELECT switch to 5. DVM shall indicate between +0.757 and +0.977 vdc.

(r) Set GPWC BOARD TEST ACREF switch to HI, DVM to AC, INPUT switch to C and METER SELECT switch to 9.

(s) Adjust COMP 115 VAC INPUT control for a DVM indication of 89 to 91 vac.

(t) Set DVM to DC, INPUT switch to A and METER SELECT switch to 5. DVM shall indicate between +0.725 and +0.975 vdc.

(u) Set DVM to AC, INPUT switch to C and METER SELECT switch to 9.

(v) Adjust COMP 115 VAC INPUT control for a DVM indication of 114 to 116 vac.

(w) Set DVM to DC, INPUT switch to A and METER SELECT switch to 5. DVM shall indicate between +0.542 and +0.792 vdc.

(x) Set GEAR 2 switch to DOWN, DVM to AC and METER SELECT switch to 6.

(y) Decrease BARO ADJ control for a DVM indication of between 0.245 and 0.255 vac.

NOTE: The BARO ADJ control must be less than 5.0 to obtain AC voltages out of phase with the reference voltage. Delay output readings until the voltage level is stabilized.

(z) Set METER SELECT switch to 5 and DVM to DC. DVM shall indicate between -0.542 and -0.792 vdc.

(aa) Verify that GPWS STATUS T. OFF light is off.

(6) Flap Delay Logic

(a) Simultaneously set FLAPS 1 switch to UP and turn on stop watch. Turn off stop watch when FD light goes off. The time shall be 1.9 to 3.4 seconds.

(b) Verify that T. OFF light comes on approximately 2 seconds after FD light goes off in step (a).

(7) Altitude Loss Comparator Verification

(a) Set FLAPS 1 switch to DOWN, METER SELECT switch to 6 and DVM to AC. Increase BARO ADJ control for a DVM indication of between 48 and 52 mvac.

(b) Simultaneously set GEAR 2 switch to UP and turn on stop watch. Turn off stop watch when T. OFF light comes on. The time shall be 5.0 to 30.0 seconds.

(c) Set GEAR 1 switch to DOWN. Decrease BARO ADJ control for a DVM indication of between 98 and 102 mvac.

(d) Set DVM to DC and METER SELECT switch to 2. Increase RADIO ADJ control for a DVM indication of between +12.14 and +12.16 vdc.

(e) Simultaneously set GEAR 1 switch to UP and turn on stop watch. Turn off stop watch when T. OFF light comes on. The time shall be 6.0 to 15.0 seconds.

(f) For model 070, 087 and 081, simultaneously set CADC switch to VAL and turn on stop watch. Verify that AURAL light is off. Turn off stop watch when GPWS VAL light comes on. The time shall be 4.2 to 5. 5 seconds.

For model 071, 072, 073 and 079, simultaneously set BARO MON switch to OFF and turn on stop watch. Verify that AURAL light is off. Turn off stop watch when GPWS VAL light comes on. The time shall be 4.2 to 5.5 seconds.

(g) Verify that computer AIR DATA light is off.

(h) For model 070,087 and 081, set CADC switch to VAL

For model 071, 072, 073 and 079, set BARO MON switch to on.

(i) Increase RADIO ADJ control until DVM indicates +14.69 to +14.71 vdc. Verify the following.

1. 700 FT light - off
2. 300 FT light - off
3. TC light - off
4. GD light - off

(j) Set METER SELECT switch to 12. DVM shall indicate between -13.5 and -15.5 vdc.

(8) Terrain Clearance Comparator Verification

(a) Set METER SELECT switch to 2. Decrease RADIO ADJ control until TC light comes on. Allow a minimum of two seconds to elapse and DVM shall indicate bewteen +10.0 and +11.2 vdc. For models 070, 071, 072, 079 Mod 4 and on, 073, 081 Mod 5 and on, and 087 Mod 2 and on; 200 FT light shall come on.

(b) Delay one second and verify the following.

1. AURAL light - on.
2. For model 070, 071, 073, 087 and 081, computer GEAR/FLAP indicator - white.

(c) Set INPUT switch to C and METER SELECT switch to 18. DVM shall indicate between -0.1 and +1.0 vdc. For models 070, 071, 072, 079 Mod 4 and on, 073, 081 Mod 5 and on, and 087 Mod 2 and on; 200 FT light shall go off.

(d) Set GEAR 1 switch to DN for two to five seconds and then return it to UP. Verify the following.

1. GD light - on.
2. TC light - off.
3. AURAL light - off.

(e) Decrease RADIO ADJ control until TC light comes on.

(f) Set INPUT switch to A and METER SELECT switch to 2. DVM shall indicate between +4.1 and +4.7 vdc for models 070,

071, 072, 073, 079 and 081 or +4.38 to +4.83 vdc for model 087.

(g) Set RADIO INPUT switch to FIXED. AURAL light shall be off.

(h) Set RADIO INPUT switch to VAR, BARO INPUT switch to GND and MODE 4 switch to ON. Verify that TC light is off.

(i) Decrease RADIO ADJ control until TC light comes on. DVM shall indicate between +2.2 and +2.8 vdc for models 070, 071, 072, 073, 079 and 081 or +3.31 and 3.95 vdc for model 087. Note actual voltage.

(j) Set FLAPS 2 switch to UP, wait five seconds and set GEAR 1 switch to DOWN. Verify that TC and AURAL lights are on.

(k) Slowly increase RADIO ADJ control until TC light goes off. DVM shall indicate a voltage +0.10 to +0.38 vdc greater than voltage noted in step (8)(i).

NOTE: If out-of-tolerance condition exists, set FLAPS 2 switch to DN and GEAR 1 switch to UP and repeat steps (8)(g) through (8)(k). Approach switching point very slowly.

(l) Set BARO FUNCTION switch to DC, BARO INPUT switch to VAR and METER SELECT switch to 6. Increase BARO ADJ control until DVM indicates between -0.29 and -0.31 vdc for models 070, 071, 072, 073, 079 and 081, or decrease until DVM indicates -0.724 to 0.726 vdc for model 087. Verify that TC light is on. Set ACREF switch to LO for model 087.

(m) Set METER SELECT switch to 2. Increase RADIO ADJ control until TC light goes off. Decrease RADIO ADJ control until TC light comes on. DVM shall indicate between +3.1 and +5.7 vdc for models 070, 071, 072, 073, 079 and 081 and +5.38 and +6.00 vdc for model 087.

(n) Set METER SELECT switch to 6. Decrease BARO ADJ control until DVM indicates between -0.64 and -0.66 vdc for models 070, 071, 072, 073, 079 and 081 or -0.899 and -0.901 vdc for model 087. Set METER SELECT switch to 2. Increase RADIO ADJ control until TC light goes off. Decrease RADIO ADJ control until TC light comes on. DVM shall indicate between +7.76 and +10.40 vdc for models 070, 071, 072, 073, 079 and 081 or +9.30 and +10.50 vdc for model 087.

(o) Verify that T. OFF light is off.

(p) Set PROGRAM FLAP switch to ON. Verify that AURAL, 1, 2, 3, EVENT, GPWS VAL and G/S lights are off.

(q) Set FLAPS 2 switch to DOWN. After approximately two seconds, FD light shall go off. After approximately another two seconds the T. OFF light shall come on.

(r) For model 087, set PROGRAM FLAP switch and PROGRAM MODE 4 switches to OFF. TC light shall come on.

(s) For model 087, set METER SELECT switch to 6. Increase BARO ADJ control until DVM indicates between -0.64 and -0.66 vdc. Set METER SELECT switch to 2. Increase RADIO ADJ control until TC light goes off. Decrease RADIO ADJ control until TC light comes on. DVM shall indicate between +9.23 and +10.70 vdc.

(t) For model 087, set METER SELECT switch to 6. Increase BARO ADJ control until DVM indicates between -0.340 and -0.360 vdc. Set METER SELECT switch to 2. Decrease RADIO ADJ control until TC light comes on. DVM shall indicate between +4.28 and +5.72 vdc.

(u) For models 070, 071, 072, 073, 079 and 081, set ACREF switch to LO, PROGRAM FLAP and MODE 4 switches to OFF.

NOTE: To restart functional test procedure at this point, set all tester controls per step C.(1), except leave TSTR PWR and COMP PWR switches set to ON and adjust COMP 115 VAC INPUT control per step F.(1)(g). Set FLAPS 1, FLAPS 2 and GEAR 1 switches to DOWN. Set RADIO and BARO INPUT switches to VAR. For normal test sequence, disregard this note.

(9) Sinkrate Comparator Verification

(a) Set METER SELECT to 6. Slowly decrease BARO ADJ control until DVM indicates between -0.74 and -0.76 vdc.

(b) Set METER SELECT switch to 2.

(c) If functional test is a restart, as noted after step (8)(u), increase RADIO ADJ control until SINK light goes off.

(d) Decrease RADIO ADJ control until SINK light comes on. DVM shall indicate between +1.49 and +8.03 vdc for models 070, 071, 072, 073, 079 and 081 or +2.94 and +6.66 vdc for model -087. Note actual voltage.

(e) Verify the following.

1. AURAL light - on.
2. For models 070, 071, 073, 087 and 081, computer front panel HI SINK indicator - white.

(f) Set INPUT switch to C and METER SELECT switch to 15. DVM shall indicate between -0.1 and +1.0 vdc.

(g) Set INPUT switch to A and METER SELECT switch to 2. Very slowly increase RADIO ADJ control until SINK light goes off. DVM shall indicate a voltage +0.14 to +0.42 vdc greater than voltage noted in step (9)(d).

(h) Set INPUT switch to A and METER SELECT switch to 6. Decrease BARO ADJ control until DVM indicates between -1.09 and -1.11 vdc. Set METER SELECT switch to 2. Increase RADIO ADJ control until DVM indicates between +18.06 and +18.08 vdc. Set METER SELECT switch to 3. DVM shall indicate between -4.2 and -4.6 vdc.

(i) Set METER SELECT switch to 2. Decrease RADIO ADJ control until SINK light comes on. DVM shall indicate between +14.72 and +18.77 vdc for models 070, 071, 072, 073, 079 and 081 or +15.68 and +17.91 vdc for model 087.

(j) Set METER SELECT switch to 6. Decrease BARO ADJ control until DVM indicates -1.49 to -1.51 vdc. Set METER SELECT switch to 2. Increase RADIO ADJ control until DVM indicates between +21.75 to +21.77 vdc. Set METER SELECT switch to 3. DVM shall indicate between -6.1 and -6.7 vdc.

(k) Verify that 1000 FT and GSS lights are off.

(l) Set METER SELECT switch to 2. Decrease RADIO ADJ control until SINK light comes on. DVM shall indicate between +19.97 and +22.15 vdc for models 070, 071, 072, 073, 079 and 081 or +20.45 and +21.73 vdc for model 087.

(m) Set METER SELECT switch to 6. Decrease BARO ADJ control until DVM indicates between -2.24 and -2.26 vdc. Set

METER SELECT switch to 2. Increase RADIO ADJ control until DVM indicates between +25.55 and +25.57 vdc. Set METER SELECT switch to 3. DVM shall indicate between -8.9 and -9.9 vdc.

(n) Set METER SELECT switch to 2. Decrease RADIO ADJ control until SINK light comes on. DVM shall indicate between +24.33 and +25.95 vdc for models 070, 071, 072, 073, 079 and 081 or +24.52 and +25.72 vdc for model 087.

(10) Sinkrate Inhibit Logic

(a) Set ACREF switch to OPEN. Verify that AURAL light is off.

(b) Set CADC switch to $\overline{\text{VAL}}$ and ACREF switch to LO. Verify that AURAL light remains off for at least seven seconds after setting ACREF to LO. GPWS VAL light may be delayed in coming on.

NOTE: AURAL light may not come on at all.

(c) Simultaneously set CADC switch to VAL and turn on stop watch. Turn off stop watch when AURAL light comes on. The time shall be 2.5 to 5.5 seconds.

(d) Set METER SELECT switch to 6. Decrease BARO ADJ control until DVM indicates between -2.99 and -3.01 vdc. Increase RADIO ADJ control until 2450 FT and AURAL lights go off.

(11) Radio Comparator Verification (2450 feet)

(a) Set BARO INPUT switch to GND and METER SELECT switch to 2. Decrease RADIO ADJ control until 2450 FT light comes on. DVM shall indicate between +25.35 and +26.75 vdc. Note actual voltage.

(b) Increase RADIO ADJ control until 2450 FT light goes off. DVM shall indicate a voltage +0.094 to +0.282 vdc greater than voltage noted in step (11)(a).

(c) For model 087, set BARO INPUT switch to VAR, PROGRAM MODE 4 switch to ON and METER SELECT switch to 6. Increase BARO ADJ control until DVM indicates between -0.89 and -0.91 vdc. Set METER SELECT switch to 2. Decrease RADIO ADJ control until SINK light comes on. DVM shall indicate between +3.68 and +7.40 vdc.

(d) For model 087, set METER SELECT switch to 6. Decrease BARO ADJ control until DVM indicates between -1.24 and -1.26 vdc. Set METER SELECT switch to 2. Increase RADIO ADJ control until SINK light goes off. Decrease RADIO ADJ control until SINK light comes on. DVM shall indicate between +16.27 and +18.12 vdc.

(e) For model 087, set METER SELECT switch to 6. Decrease BARO ADJ control until DVM indicates between -1.49 and -1.51 vdc. Set METER SELECT switch to 2. Increase RADIO ADJ control until SINK light goes off. Decrease RADIO ADJ control until SINK light comes on. DVM shall indicate between +19.82 and +20.82 vdc.

(f) For model 087, set METER SELECT switch to 6. Decrease BARO ADJ control until DVM indicates between -2.24 and -2.26 vdc. Set METER SELECT switch to 2. Increase RADIO ADJ control until SINK light goes off. Decrease RADIO ADJ control until SINK light comes on. DVM shall indicate between +23.90 and +25.13 vdc.

(g) For model 087, set BARO INPUT switch to GND and PROGRAM MODE 4 switch to OFF.

(12) Airborne Self Test Logic

(a) Decrease RADIO ADJ control until DVM indicates between +17.99 and +18.01 vdc. Verify that CW and AURAL lights are off.

NOTE: Delay proceeding until CW light is off. The CW light may not come on at all. Light operation is dependent on how fast the RADIO ADJ control is decreased to the required setting.

(b) Set INPUT switch to C, METER SELECT switch to 7, and GEAR 1 switch to UP. Connect oscilloscope to SCOPE jacks. Adjust vertical display for 10V/division. Connect trigger input to auxiliary fixture BP-22. Adjust trigger for negative slope, external, DC. Set SELF TEST switch to ON and measure, on the scope, the time display is +28 vdc before it drops to 0. The time shall be between 0.6 and 1.6 seconds. Verify that EVENT light is off and that GPWS VAL and G/S lights are on.

(c) Set GEAR 1 switch to DOWN. Verify that AURAL light is off.

(d) Set GEAR 1 switch to UP. The AURAL, 1, 2 and 3 lights shall come on. The speaker shall produce the word "glideslope" once, followed by the words "whoop-whoop pull-up" for model 070, 071, 072, 073, 087 and 081 or the words "whoop-whoop terrain" for model 079 after the lights come on. Volume level may be lower than during normal warnings.

(13) Radio Comparator Verification (1000 feet).

(a) Set INPUT switch to A and METER SELECT switch to 2. Decrease RADIO ADJ control until 1000 FT light comes on. DVM shall indicate between +16.57 and +17.93 vdc. Note actual voltage. Verify that AURAL light is off.

(b) Increase RADIO ADJ control until 1000 FT light goes off. DVM shall indicate a voltage of +0.25 to +0.75 vdc greater than voltage noted in step (13)(a).

(14) Airborne Self Test Inhibit Logic

(a) Set INHIBIT GND switch to ON. Verify that AURAL light is off.

(b) Set INHIBIT GND switch to OFF and INHIBIT +28 switch to ON. Verify that AURAL light is off and remains off for two seconds minimum after setting INHIBIT +28 switch to ON. The GPWS VAL light shall come on.

(c) Set INHIBIT +28 switch to OFF and R/A switch to $\overline{\text{VAL}}$. Verify that SINK, AURAL and G/S lights are off and that computer front panel RADIO ALT light is off.

(d) Set INPUT switch to C and METER SELECT switch to 7. Connect oscilloscope trigger input to auxiliary fixture BP-19. Adjust trigger for positive slope, external, DC. Set R/A switch to VAL. Measure, on the scope, the time display is +28 vdc before it drops to 0. The time shall be between 2.7 and 5.7 seconds. Optional method of time measurement - simultaneously set R/A switch to VAL and turn on stop watch, end timing when AURAL light come on.

(e) For models 070, 087 and 081, set BARO OUTPUT switch to AC2.

For all models, set BARO MON switch to OFF. Verify that AURAL light is off and that G/S light is on.

(f) For models 070, 071, 072, 073, 079 and 081, set BARO MON switch to ON. Disconnect oscilloscope from tester. Set BARO INPUT switch to VAR. Wait for AURAL light to come on before proceeding. Simultaneously set SELF TEST switch to OFF and turn on stop watch. Turn off stop watch when EVENT light comes on. The time shall be between 4.7 and 5.8 seconds.

For model 087, set BARO MON switch to ON. Disconnect oscilloscope from tester. Set BARO INPUT switch to VAR. Wait for AURAL light to come on before proceeding. Set SELF TEST switch to OFF.

(g) Set BARO INPUT switch to GND and FLAPS 2 switch to UP.

(h) For models 070, 081 and 087, set BARO INPUT switch to AC1.

NOTE: To restart functional test procedure at this point, set all tester controls per step C.(1), except leave TSTR PWR and COMP PWR switches set to ON and adjust COMP 115 VAC INPUT control per step F.(1)(g). Set FLAPS 1 switch to DOWN and RADIO INPUT switch to VAR. Increase RADIO ADJ control until 700 FT light goes off. For normal test sequence, disregard this note.

(15) Radio Comparator Verification (700 feet)

(a) Decrease RADIO ADJ control until 700 FT light comes on. Set INPUT switch to A and METER SELECT switch to 2. DVM shall indicate between +12.31 and +13.78 vdc. Note actual voltage.

(b) Increase RADIO ADJ control until 700 FT light goes off. DVM shall indicate a voltage +0.38 to +1.14 vdc greater than voltage noted in step (15)(a).

(16) Closure Time Constant Verification

(a) Set METER SELECT switch to 8. DVM shall indicate between -0.169 and +0.349 vdc.

(b) Set INPUT switch to B, METER SELECT switch to 17, TEST SELECT to B and TEST SIGNAL to ON. Increase TEST SIGNAL ADJ control until DVM indicates between +8.19 and +8.21 vdc. Set INPUT switch to A and METER SELECT switch to 7. DVM shall indicate between +2.200 and +2.600 vdc. Verify that CW light is off.

(c) Set GEAR 1 switch to DOWN. Delay output reading until voltage level stabilizes. DVM shall indicate between +3.146 and +3.510 vdc. Verify the following.

1. CW and AURAL lights are on.
2. For models 070, 071, 073, 087 and 081, computer front panel TERRAIN indicator shall be white.

(d) Set INPUT switch to C and METER SELECT switch to 16. DVM shall indicate between -0.1 and +1.0 vdc.

(17) Radio Comparator Verification (300 feet)

(a) Set TEST SIGNAL switch to OFF, FLAPS 2 switch to DOWN, INPUT switch to A and METER SELECT switch to 2. Decrease RADIO ADJ control until 300 FT light comes on. DVM shall indicate between +5.68 and +6.48 vdc. Note actual voltage.

(b) Increase RADIO ADJ control until 300 FT light goes off. DVM shall indicate a voltage +0.66 to +1.98 vdc greater than voltage noted in step (17)(a).

(18) Radio Comparator Verification (200 feet)

(a) For models 070, 071, 072, 079 Mod 4 and on, 073, 081 Mod 5 and on, and 087 Mod 2 and on; set PROGRAM MODE 4 switch to ON. Decrease RADIO ADJ control until 200 FT light comes on. DVM shall indicate between +4.14 and +4.70 vdc. Note actual voltage.

(b) Increase RADIO ADJ control until 200 FT light goes off. DVM shall indicate a voltage +0.5 to +1.5 vdc greater than voltage noted in step (18)(a).

(19) Radio Rate Limits and Bias Circuit Verification

(a) For models 070, 071, 072, 079 Mod 4 and on, 073, 081 Mod 5 and on, and 087 Mod 2 and on; set PROGRAM MODE 4 switch to OFF. Set PROGRAM FLAP switch to ON. Wait for FD light to go off before proceeding. Set TEST SIGNAL ADJ control between 4.9 and 5.1 (numbers on dial). Set TEST SIGNAL switch to C and TEST SIGNAL switch to ON. Set METER SELECT switch to 4. Increase TEST SIGNAL ADJ control until DVM indicates between -0.01 and +0.01 vdc. Set INPUT switch to B and METER SELECT switch to B and METER SELECT switch to 17. DVM shall indicate between +2.015 and +2.125 vdc.

(b) Set PROGRAM FLAP switch to OFF. Wait for FD light to come on before proceeding. Set INPUT switch to A and METER SELECT switch to 4. Decrease TEST SIGNAL ADJ

control until DVM indicates between -0.01 and +0.01 vdc. Set INPUT switch to B and METER SELECT switch to 17. DVM shall indicate between +1.307 and +1.393 vdc.

(c) Decrease RADIO ADJ control until 200 FT light comes on. Set INPUT switch to A and METER SELECT switch to 4. DVM shall indicate between -0.631 and -0.663 vdc.

(d) Decrease TEST SIGNAL ADJ until DVM indicates between -0.01 and +0.01 vdc. Set INPUT switch to B and METER SELECT switch to 17. DVM shall indicate between +0.336 and +0.364 vdc.

(20) Closure Comparator Verification (CW)

(a) Set BOARD TEST LIMIT switch to GND, TEST SIGNAL SELECT switch to B, FLAPS 2 switch to UP. Set INPUT switch to A and METER SELECT switch to 7. Increase TEST SIGNAL ADJ control in small increments and then wait for output indication on DVM to stabilize. Continue to increase control in small increments until DVM indicates between +2.99 and +3.01 vdc. Set METER SELECT switch to 3. Slowly increase RADIO ADJ control until CW light goes off. Very slowly decrease RADIO ADJ control until CW light comes on. DVM shall indicate between -2.925 and -3.055 vdc. Note actual voltage.

(b) Increase RADIO ADJ control until CW light goes off. DVM shall indicate between -10 and -60 mvdc (more negative) than voltage noted in step (20)(a).

NOTE: If DVM indication is out of tolerance in step (20)(b), repeat steps (20)(a) and (20)(b).

(21) Radio Comparator Verification (50 feet)

(a) Set TEST SIGNAL switch to OFF, LIMIT switch to OPEN and METER SELECT switch to 2. Decrease RADIO ADJ control until 50 FT light comes on. DVM shall indicate between +1.327 and +1.495 vdc. Note actual voltage.

(b) Increase RADIO ADJ control until 50 FT light goes off. DVM shall indicate a voltage +0.5 to +0.9 vdc greater than voltage noted in step (21)(a).

(22) Closure Warning Verification

(a) Set FLAPS 1 and GEAR 1 switches to UP. Set TEST SIGNAL SELECT switch to A.

NOTE: To restart functional test procedure at this point, set all tester controls per step C.(1), except leave TSTR PWR and COMP PWR switches set to ON and adjust COMP 115 VAC INPUT control per step F.(1)(g). Set RADIO INPUT switch to VAR. For normal test sequence, disregard this note.

NOTE: In steps (22)(b), (22)(c) and (22)(d), a special linear altitude, but non-linear voltage ramp is applied to the radio input. This ramp will automatically stop and hold the altitude voltage for noting when the AURAL light comes on.

(b) Set METER SELECT switch to 2. Increase RADIO ADJ control until DVM indicates between +23.9 and +24.0 vdc. Set WARN SEL switch to 2. Set INPUT switch to B and METER SELECT switch to 20. Increase RATE ADJ control until DVM indicates between +2.99 and +3.01 vdc. Set HLD switch to ON, INPUT switch to A and METER SELECT switch to 8. DVM shall indicate between -0.2 and +0.4 vdc. Set METER SELECT switch to 2 and RESET switch to ON. As soon as AURAL light comes on, note DVM indication. DVM shall indicate between +8.56 and +17.61 vdc.

(c) Set RESET switch to OFF. Increase RADIO ADJ control until DVM indicates between +26.16 and +26.18 vdc. Set INPUT switch to B and METER SELECT switch to 20. Increase RATE ADJ control until DVM indicates between +6.99 and +7.01 vdc. Set INPUT switch to A and METER SELECT switch to 8. DVM shall indicate between -0.2 and +0.4 vdc. Set HLD switch to OFF and return to ON. Set METER SELECT switch to 2 and RESET switch to ON. As soon as AURAL light comes on, note DVM indication. DVM shall indicate between +18.08 and +21.61 vdc.

(d) Set RESET switch to OFF. Set METER SELECT switch to 8. DVM shall indicate between -0.2 and +0.4 vdc. Set GEAR 1 switch to DOWN. Set HLD switch to OFF and return to ON. Set METER SELECT switch to 2 and RESET switch to ON. As soon as AURAL light comes on, note DVM indication. DVM shall indicate between +16.08 and +20.06 vdc.

(e) Set WARN SEL, RESET and HLD switches to OFF.

NOTE: To restart functional test procedure at this point, set all tester controls per step C.(1), except leave TSTR PWR and COMP PWR switches set to ON and adjust COMP 115 VAC INPUT control per step F.(1)(g).

Set RADIO INPUT switch to VAR, INPUT switch to A and METER SELECT switch to 2. Increase RADIO ADJ control until DVM indicates between +26.16 and +26.18 vdc. Set GEAR 1 switch to DOWN. For normal test sequence, disregard this note.

(23) Glideslope Soft Comparator Verification (GSS)

(a) Set INPUT switch to B and METER SELECT switch to 11. Decrease GLIDESLOPE ADJ control, slowly and smoothly, until GSS light comes on. DVM shall indicate between -91 and -104 mvdc. Note actual voltage.

NOTE: In the following steps requiring adjusting GLIDESLOPE ADJ control, turn control slowly and smoothly to avoid triggering the glideslope beam filter circuit. If this circuit triggers, the glideslope warnings will be disabled for 15 seconds and the G/S light will not come on and/or high volume "glideslope" voice will not be heard. If this occurs set GLIDESLOPE ADJ control to 5.0 $\pm$ 0.1 and repeat step (23)(a).

(b) Increase GLIDESLOPE ADJ control, slowly and smoothly, until GSS light goes off. DVM shall indicate a voltage +15 to +30 mvdc more positive (less negative) than voltage noted in step (23)(a).

(24) Glideslope Hard Comparator Verification (GSH)

(a) Decrease GLIDESLOPE ADJ control, slowly and smoothly, until GSH light comes on. DVM shall indicate between -140 and -160 mvdc. Note actual voltage.

(b) Increase GLIDESLOPE ADJ control, slowly and smoothly, until GSH light goes off. DVM shall indicate a voltage 15 to 30 mvdc more positive (less negative) than voltage noted in step (24)(a).

(25) Glideslope Warning Logic

(a) Set GS CANCEL switch to ON for one second minimum, then return to OFF. Set INH 1 and INH 2 switches to FRONT. Decrease RADIO ADJ control until 1000 FT light comes on. The G/S light shall come on and the output from the speaker shall be the word "glideslope" repeated approximately every five seconds. Adjust VOLUME ADJ control as required. The actual time will be measured later.

(b) Set INH 1 switch to BACK. The G/S light shall go off. Verify that there is no periodic output from speaker for 10 seconds minimum.

(c) Set INH 1 switch to FRONT. The word "glideslope" shall begin in approximately one second.

(d) Set INH 2 switch to BACK. The G/S light shall go off.

(e) For models 070, 071, 072, 073, 087 and 079, set INH 2 switch to FRONT and MODE 1 switch to VOR. The G/S light shall come on.

For model 081, set INH 2 switch to FRONT, MODE 1 switch to VOR and GSH switch to $\overline{\text{VAL}}$. The G/S light shall come on.

(f) For models 070, 071, 072, 073, 087 and 079, set MODE 2 switch to VOR. The G/S light shall go off.

For model 081, set GSL switch to $\overline{\text{VAL}}$. The G/S light shall go off.

(g) For models 070, 071, 072, 073, 087 and 079, set MODE 1 switch to ILS. The G/S light shall come on.

For model 081, set MODE 1 switch to ILS and Mode 2 switch to VOR. The G/S light shall come on.

(h) For models 070, 071, 072, 073, 087 and 079, set GSH switch to $\overline{\text{VAL}}$. The G/S light shall be on.

For model 081, set MODE 1 switch to VOR. The G/S light shall go off.

(i) For models 070, 071, 072, 073, 087 and 079, set GSL switch to $\overline{\text{VAL}}$. The G/S light shall go off.

For model 081, set GSH switch to VAL. The G/S light shall come on.

(j) For models 070, 071, 072, 073, 087 and 079, set GSH switch to VAL. The G/S light shall come on.

For model 081, set GSL switch to VAL. The G/S light shall be on.

(k) Set R/A switch to $\overline{\text{VAL}}$. The G/S light shall go off.

(l) Set R/A switch to VAL and RADIO INPUT to FIXED. The G/S light shall be off.

(m) Set RADIO INPUT switch to VAR and GEAR 1 switch to UP. The G/S light shall be off.

(n) For models 070, 071, 072, 073 and 079, set GEAR 1 switch to DOWN. Set GS CANCEL to ON for one second minimum, then return it to OFF. The G/S light shall be off.

For models 087 and 081, set GEAR 1 switch to DOWN. Set SELF TEST switch to ON for one second minimum, then return it to OFF. The G/S light shall be off.

(o) Increase RADIO ADJ control until 1000 FT light goes off. The G/S light shall be off.

(26) Glideslope Voice Repetition Rate and Amplitude

(a) Set INPUT switch to A and METER SELECT switch to 2. Decrease RADIO ADJ control until DVM indicates between +16.09 and +16.11 vdc. Set INPUT switch to B and METER SELECT switch to 11. Increase GLIDESLOPE ADJ control, slowly and smoothly, until DVM indicates between -98 and -102 mvdc. Set INPUT switch to A and METER SELECT switch to 24. Connect oscilloscope to SCOPE jacks. Set scope for internal trigger, DC, 1.0 V/division, and adjust as necessary. Observe the scope for the maximum peak-to-peak voltage during the word "glideslope". It shall be between 2.3 and 3.5 volts peak-to-peak. Observe the time between the words "glideslope", without including words. The time shall be between 3.5 and 5.8 seconds. Time may be checked with stop watch.

(b) Set INPUT switch to B and METER SELECT switch to 11. Decrease GLIDESLOPE ADJ control, slowly and smoothly, until DVM indicates between -0.148 and -0.152 vdc. Set INPUT switch to A and METER SELECT switch to 24. Observe the time, on the scope, between the words "glideslope", without including the words. The time shall be between 2.25 and 3.75 seconds. Time may be checked with stop watch.

(c) Set METER SELECT switch to 2. Decrease RADIO ADJ control until DVM indicates between +9.39 and +9.41 vdc. Set INPUT switch to A and METER SELECT switch to 24. Observe the time, on the scope, between the words "glideslope", without including the words. The time

shall be between 1.1 and 1.9 seconds. Time may be checked with stopwatch.

(d) If GSH light is on, no adjustment of the GLIDESLOPE ADJ control is required. If GSH light is off, decrease GLIDESLOPE ADJ control, slowly and smoothly, until GSH light comes on. Observe scope for maximum peak-to-peak voltage during word "glideslope". The voltage shall be between 2.3 and 3.5 volts peak-to-peak.

(e) Decrease RADIO ADJ control until 300 FT light comes on. The scope shall display a maximum peak-to-peak voltage of between 4.6 and 6.9 volts.

For models 070, 071, 073, 087 and 081, computer front panel G/S indicator shall be white.

Set INPUT switch to C and METER SELECT switch to 19. DVM shall indicate between -0.1 and +1.0 vdc.

(f) Set GS CANCEL switch to ON for one second minimum, then return it to OFF. G/S light shall come on for models 070, 071, 072, 073, 079 and 081, and shall go off for model 087.

(g) For model 087, delay one second before proceeding, increase RADIO ADJ control until 1000 FT light goes off. Decrease RADIO ADJ control until 300 FT light comes on.

Set INPUT switch to A and METER SELECT switch to 24.

For models 070, 071, 072, 073, 087 and 079, set MODE 1 switch to VOR during a "glideslope" word. The scope volume shall diminish to the approximate value shown below for remainder of word and then stop. The scope shall display a maximum peak-to-peak voltage of 2.3 to 3.5 volts. To repeat test, return MODE 1 switch to ILS, until another "glideslope" word occurs and then switch to VOR during word.

For model 081, set GSH switch to $\overline{\text{VAL}}$ during a "glideslope" word. The scope volume shall diminish to the approximate value shown below for remainder of word and then stop. The scope shall display a maximum peak-to-peak voltage of 2.3 to 3.5 volts. To repeat test, return GSH switch to VAL, until another "glideslope" word occurs and then switch to $\overline{\text{VAL}}$ during word.

(h) For models 070, 071, 072, 073, 087 and 079 only, set MODE 1 switch to ILS and for model 081 only; set GSH switch to VAL. Set GEAR 1 switch to UP during a "glideslope" word. The scope volume shall diminish to approximate value shown below and then stop. The scope shall display a maximum peak-to-peak voltage of 2.3 to 3.5 volts. To repeat test, return GEAR 1 switch to DOWN until another "glideslope" word occurs and then switch to UP during the word.

(i) Set GEAR 1 switch to DOWN. Increase GLIDESLOPE ADJ control, slowly and smoothly, until GSH light goes off. The scope shall display a maximum peak-to-peak voltage of 2.3 to 3.5 volts.

(j) Set FLAPS 1 and 2 switches to DOWN. Set RADIO INPUT switch to FIXED for one second minimum, then return it to VAR. The G/S light shall come on.

(k) Set FLAPS 1 switch to UP. G/S light shall delay going off for approximately two seconds until FD light goes off.

(27) High Level Glideslope Input Verification

(a) For models 070, 071, 071, 073, 087 and 079, set GAIN switch to HI and for model 081, verify that GAIN switch is set to LO. Set INPUT switch to A and METER SELECT switch to 2. Decrease RADIO ADJ control until DVM indicates between +3.39 and +3.41 vdc. Set INPUT switch to B and METER SELECT switch to 11. Increase GLIDESLOPE ADJ control, slowly and smoothly, until GSS light goes off. Decrease GLIDESLOPE ADJ control, slowly and smoothly, until GSS light comes on. DVM shall indicate between -1.2 and -1.5 vdc for models 070, 071, 072, 073, 087 and 079 or -0.085 and -0.104 vdc for model 081, Mod 2 or 0.095 and -0.116 vdc for model 081, Mod 3 and on.

(b) Decrease GLIDESLOPE ADJ control, slowly and smoothly, until GSH light comes on. DVM shall indicate between -1.88 and -2.22 vdc for models 071, 071, 072, 073, 087 and 079 or -0.133 and 0.159 vdc for model 081.

(c) Set RADIO INPUT switch to FIXED. Decrease GLIDESLOPE ADJ control, slowly and smoothly, until GSS light comes on. DVM shall indicate between -3.1 and -3.6 vdc for models 070, 071, 072, 073, 087 and 079 or -0.225 and -0.271 vdc for model 081, Mod 2 or -0.232 and 0.272 vdc for model 081, Mod 3 and on.

(d) Decrease GLIDESLOPE ADJ control, slowly and smoothly, until GSH light comes on. DVM shall indicate between -3.76 and -4.36 vdc for models 070, 071, 072, 073, 087 and 079 or -0.276 and -0.324 vdc for model 081.

(28) Glideslope Beam Filter Verification

(a) Set METER SELECT switch to 12. DVM shall indicate between -50 and +50 mvdc.

(b) Set SIGNAL switch to EXT. Connect signal generator to EXT SIGNAL HI/LO jacks. Adjust signal generator output for 1.0 ± 0.1 Hz sine wave. Adjust signal generator amplitude for a scope indication of 2.4 to 2.6 volts peak.

NOTE: Verify that signal generator output contains less than ±15 mvdc offset.

(c) Increase signal generator frequency until a scope display of one-half signal amplitude is reached. The scope shall indicate 1.1 to 1.3 volts peak and the signal generator frequency shall be 2.0 to 5.0 Hz.

(d) Decrease signal generator frequency through a maximum amplitude point until required scope reading of one-half signal amplitude is reached. The scope shall indicate 1.1 to 1.3 volts peak and the signal generator frequency shall be 0.1 to 0.3 Hz.

(e) Set FLAPS 1 switch to DOWN and RADIO INPUT switch to VAR. Decrease signal generator until the scope indicates 0.1 to 0.2 volts peak. G/S light may be delayed up to 15 seconds, thereafter it will flash once every cycle of the signal generator.

(f) Slowly increase the signal generator frequency for approximately 50 mvdc increase in scope display. Wait to verify that G/S light still flashes. Continue these steps until the G/S light remains off. The scope shall indicate 0.25 to 0.45 volts peak. The measured amplitude is the threshold for the 15 second glideslope inhibit circuit.

(g) Simultaneously set SIGNAL switch to NORM and turn on stop watch. Turn off stop watch when G/S light comes on. The time shall be between 12.2 and 18.8 seconds. Disconnect the signal generator and oscilloscope.

(h) Increase GLIDESLOPE ADJ control, slowly and smoothly, until GSS and G/S lights go off.

(i) Set RADIO INPUT switch to FIXED. Increase GLIDESLOPE ADJ control, slowly and smoothly, until it is set at 4.9 to 5.1 (numbers on dial). Set GAIN switch to LO and FLAPS 1 and 2 to UP.

NOTE: To restart functional test procedure at this point, set all tester control per step C.(1) except leave TSTR PWR and COMP PWR switches set to ON and adjust COMP 115 VAC INPUT control per step F.(1)(g). Set GEAR 1 switch to DOWN, INH 1 switch to FRONT, MODE 2 switch to VOR, and INH 2 switch to FRONT.

For models 070, 071, 072, 073, 087 and 079, set GSL switch to VAL.

For model 081, set MODE 1 switch to VOR. For normal test sequence, disregard this note.

(29) Ground Self Test Verification

(a) For models 070, 071, 073, 087 and 081; momentarily press computer front panel WARNING MODE RESET switch. Verify that all computer indicators are black.

Set INPUT switch to A and METER SELECT switch to 7. Monitor DVM for a stable indication of between -6.0 and -6.4 vdc before continuing.

(b) Increase VOLUME ADJ control to compensate for lower audio level during self test. Set tester SELF TEST switch to ON and verify the following sequence of events.

1. Speaker output shall be one "glideslope".
2. CW light shall come on after approximately two seconds.
3. AURAL light shall come on.
4. Speaker output shall be "whoop whoop" "pull-up", except model 079 shall be "whoop whoop terrain" for as long as CW light is on.
5. After CW light goes off, speaker shall complete the last "pull-up".

NOTE: To repeat this test, set SELF TEST switch to OFF and perform step (29)(a) and then (29)(b).

(c) Verify the following:

1. EVENT light is off.
2. GPWS VAL light and G/S light are on.
3. For models 070, 071, 073, 087 and 081, computer front panel indicators are black.

(d) Set METER SELECT switch to 1. DVM shall indicate between +1.180 and +1.968 vdc. Set METER SELECT switch to 5. DVM shall indicate between -1.50 and -2.50 vdc.

(e) Set SELF TEST switch to OFF. The AURAL light shall remain off. Set METER SELECT switch to 7. Verify that DVM indicates between -6.0 and -6.4 vdc before continuing.

(30) Front Panel Ground Self Test

(a) For models 070, 071, 073, 087 and 081, press and hold computer front panel SELF TEST switch. Two seconds after computer front panel TERRAIN indicator turns white, release switch. All computer front panel lights shall come on briefly and GPWC OK light shall remain on as long as SELF TEST switch is in hold position. To repeat test, press computer front panel WARNING MODE RESET switch to reset indicators and verify that DVM stabilizes at -6.0 to -6.4 vdc before repeating test.

For model 072 and 079, press and hold computer front panel SELF TEST switch for five seconds and then release. All computer front panel lights shall come on briefly and GPWC OK light shall remain on as long as SELF TEST switch is in hold position. Verify that DVM stabilizes at -6.0 to -6.4 vdc before repeating test.

(b) For models 070, 071, 073, 087 and 081, all computer front panel indicators shall be white.

(31) Front Panel System Fault Isolation (Flaps Down)

(a) Set PROGRAM FLAP switch to ON.

For models 070, 071, 073, 087 and 081, momentarily press computer WARNING MODE RESET switch. All computer indicators shall turn black.

Verify that DVM has stabilized at -6.0 to -6.4 vdc before continuing.

(b) Press and hold computer SELF TEST switch for five seconds minimum. Verify the following:

1. Speaker output shall be one "glideslope".
2. Computer FLAP DN light shall be on.
3. For models 070, 071, 073, 087 and 081, computer TERRAIN indicator remains black.
4. Computer GPWC OK light shall be off.

Release computer SELF TEST switch. To repeat test, see step (30)(a).

(c) For models 070, 071, 073, 087 and 081, the computer indicators shall be as follows:

1. HI SINK - white
2. TERRAIN - black
3. TAKE OFF - black
4. GEAR/FLAP - black
5. G/S - white

(32) Fault Isolation (Gear Up)

(a) For models 070, 071, 073, 087 and 081, press computer WARNING MODE RESET switch. All computer indicators shall be black.

Set PROGRAM FLAP switch to OFF and GEAR 1 switch to UP. Verify that DVM has stabilized at -6.0 to -6.4 vdc before continuing.

(b) Press and hold computer SELF TEST switch for five seconds minimum. Verify the following:

1. No output from speaker at beginning of test.
2. Computer GEAR light is on.

3. For models 070, 071, 073, 087 and 081, computer TERRAIN indicator is white.

4. Computer GPWC OK light is on. Release computer SELF TEST switch. To repeat test, see step (30)(a).

(c) For models 070, 071, 073, 087 and 081, verify the following:

1. Computer HI SINK, TERRAIN, TAKE OFF and GEAR/FLAP indicators are white.

2. Computer G/S indicator is black.

(33) Fault Isolation (Altimeter Failure)

(a) For models 070, 071, 073, 087 and 081, momentarily press computer WARNING MODE RESET switch. All computer indicators shall be black.

Set GEAR 1 switch to DOWN and R/A switch to $\overline{\text{VAL}}$. Verify that DVM has stabilized at -6.0 to -6.4 vdc before continuing.

(b) Press and hold computer SELF TEST switch for five seconds minimum. Verify the following:

1. Computer RADIO ALT light is on.

2. For models 070, 071, 073, 087 and 081, computer TERRAIN indicator is white.

3. Computer GPWC OK light is off.

4. No output from speaker.

Release computer SELF TEST switch. To repeat test, see step (30)(a).

(c) For models 070, 071, 073, 087 and 081, verify the following:

1. Computer HI SINK, TERRAIN, TAKE OFF and GEAR/FLAP are white

2. Computer G/S indicator is black

(34) Fault Isolation (Baro Rate Failure)

(a) For models 070, 071, 073, 087 and 081, momentarily press computer WARNING MODE RESET switch. All computer indicators shall be black.

Set R/A switch to VAL.

For models 070, 087 and 081, set CADC switch to VAL.

For models 071, 072, 073 and 079, set BARO MON switch to OFF.

Verify that DVM has stabilized at -6.0 to -6.4 vdc before continuing.

(b) Press and hold computer SELF TEST switch for five seconds minimum. Verify the following:

1. Computer AIR DATA light is on.
2. For models 070, 071, 073, 087 and 081, computer TERRAIN indicator is white.
3. Computer GPWC OK light is off.

Release computer SELF TEST switch. To repeat test, see step (30)(a).

(c) For models 070, 071, 073, 087 and 081, verify the following:

1. Computer HI SINK and TAKE OFF indicators are black.
2. Computer TERRAIN, GEAR/FLAP and G/S indicators are white.

(35) Fault Isolation (GPWC Failure)

(a) For models 070, 071, 073, 087 and 081, momentarily press computer WARNING MODE RESET switch. All computer indicators shall be black.

For models 070, 087 and 081, set CADC switch to VAL.

For Models 071, 072, 073 and 079, set BARO MON switch to ON.

Set TEST SIGNAL SELECT switch to B and TEST SIGNAL switch to ON. Set TEST SIGNAL ADJ control for 0.0 to 0.2 (numbers on dial). Set GPWC BOARD TEST LIMIT switch to GND. Verify that DVM has stabilized at -6.2 to -7.0 vdc before continuing.

(b) Press and hold computer SELF TEST switch for five seconds and release. Verify that GPWC OK light is off. For models 070, 071, 073, 087 and 081 computer TERRAIN indicator shall remain unchanged.

(c) For models 070, 071, 073, 087 and 081, verify the following:

1. Computer HI SINK, TAKE OFF, GEAR/FLAP and G/S indicators are white.

2. Computer TERRAIN indicator is black.

(36) Fault Isolation (Glideslope Signal Wiring Failure)

(a) Set GPWC BOARD TEST LIMIT switch to OPEN and TEST SIGNAL ON/OFF switch to OFF. Press and hold GPWC BOARD TEST GS UP switch and then press and hold computer SELF TEST switch.

For models 070 and 087, GSS light shall come on and computer G/S VAL light shall go off.

For models 071, 072, 073, 079 and 081 GSS light shall be off and computer G/S VAL light shall come on.

Release GPWC BOARD TEST GS UP and computer SELF TEST switches.

(b) Press and hold GPWC BOARD TEST GS DN switch and then press and hold computer SELF TEST switch.

For models 070 and 087, computer G/S VAL light shall go off. Release GPWC BOARD TEST GS DN and computer SELF TEST switches.

For models 071, 072, 073, and 079, computer G/S VAL light shall come on. Release GPWC BOARD TEST GS DN and computer SELF TEST switches.

For model 081, computer G/S VAL light shall come on. Release computer SELF TEST switch. GPWS VAL light shall come on. Release GPWC BOARD TEST GS DN switch.

(c) Press and hold GPWC BOARD TEST GS SIG switch and then press and hold computer SELF TEST switch.

For models 070 and 087, computer G/S VAL light shall go off.

For models 071, 072, 073 and 079, computer G/S VAL light shall come on.

Release GPWC BOARD TEST GS SIG and computer SELF TEST switches.

(d) Press and hold GPWC BOARD TEST GS COM switch and then press and hold computer SELF TEST switch.

For models 070 and 087, computer G/S VAL light shall go off. Release GPWC BOARD TEST GS COM and computer SELF TEST switches.

For models 071, 072, 073, and 079, computer G/S VAL light shall come on. Release computer SELF TEST switch. GPWS VAL light shall come on. Release GPWC BOARD TEST GS COM switch.

(e) For models 072 and 079, verify that DVM has stabilized at -6.0 to -6.4 vdc before continuing. For models 071, 073 and 081, momentarily press computer WARNING MODE RESET switch. All computer indicators shall turn black. Verify that DVM has stabilized at -6.0 to -6.4 vdc before continuing.

(f) For models 071, 073 and 081, press and hold GPWC BOARD TEST GS UP switch and then press and hold computer SELF TEST switch. Verify that there is no audible word "glideslope" from the speaker. Verify the computer TERRAIN indicator is white and G/S indicator is black. Computer GPWC OK light shall be on. Release GPWC BOARD TEST GS UP and computer SELF TEST switches.

For models 072 and 079, press and hold GPWC BOARD TEST GS UP switch and then press and hold computer SELF TEST switch. Verify that there is no audible word "glideslope" from the speaker and that computer GPWC OK light is on. Release GPWC BOARD TEST GS UP and computer SELF TEST switches.

(37) Internal Computer Power Monitor Verification

(a) Simultaneously set PWR MON 1 switch to ON and turn on stopwatch. Turn off stopwatch when GPWS VAL light comes on. The time shall be 4.2 to 5.5 seconds.

(b) Set PWR MON 2 switch to ON and PWR MON 1 switch to OFF. Verify that GPWS VAL light doesn't go off within five seconds of changing positions of switches. Light should remain on indefinitely.

(38) Radio Altimeter Wiring Verification

(a) For models 070, 071, 073, 087 and 081, set R/A switch to $\overline{\text{VAL}}$ and PWR MON 2 switch to OFF.

SELECT switch to 2 and RADIO ADJ INPUT switch to VAR. Decrease RADIO ADJ control until DVM indicates between +2.9 and +3.1 vdc.

For models 070, 071, 073, 087 and 081, computer HI SINK and TERRAIN indicators shall be white.

(b) For models 070, 071, 073, 087 and 081, set R/A switch to VAL. Computer indicators shall all turn black after about a 3 second delay.

(c) Set RADIO ADJ INPUT switch to RAMP. Decrease RADIO ADJ control until DVM indicates between +0.19 and +0.21 vdc. Verify that GPWS VAL light is off and remains off for six seconds before continuing.

(d) Decrease RADIO ADJ control until DVM indicates between +40 and +60 mvdc. After approximately five seconds, GPWS VAL light shall come on.

(e) Increase RADIO ADJ control until DVM indicates between +0.32 and +0.36 vdc. After approximately 5 seconds, the GPWS VAL light shall go off.

(f) Set RADIO ADJ INPUT switch to VAR. Increase RADIO ADJ control until DVM indicates between +2.9 and +3.1 vdc. Set SELF TEST switch to ON. The GSS light shall be off. Set SELF TEST switch to OFF.

(39) Auxiliary AC Baro Rate Input

(a) For models 070, 087 and 081, set BARO FUNCTION switch to AC, BARO MON switch to OFF, BARO INPUT switch to VAR. Set DVM to AC. Set INPUT switch to C and METER SELECT switch to 9. Adjust COMP 115 VAC INPUT control until DVM indicates between 25.8 and 26.2 vac. Set INPUT switch to A and METER SELECT switch to 6. Adjust BARO ADJ control until DVM indicates between 0.42 and 0.44 vac. BARO ADJ control must be set below 5.0 in order to obtain an AC voltage out-of-phase with the reference voltage. Set DVM to DC.

For models 071, 072, 073 and 079, set FUNCTION switch to AC, OUTPUT switch to AC2 and BARO INPUT switch to VAR. Set DVM to AC. Set INPUT switch to C and METER SELECT switch to 9. Adjust COMP 115 VAC INPUT control until DVM indicates between 25.8 and 26.2 vac. Set INPUT switch to A and METER SELECT switch to 6. Decrease BARO ADJ control until DVM indicates between 0.99 and 1.01 vac. BARO ADJ control must be set below 5.0 in order to obtain an AC voltage out-of-phase with the reference voltage. Set METER SELECT switch to 5 and DVM to DC. DVM shall indicate between -1.031 and -1.265 vdc.

(b) Verify that AURAL light is on.

(40) Primary Power Monitor Verification

(a) Decrease COMP 115 VAC INPUT control until light 1 remains off. Set INPUT switch to B and METER SELECT switch to 5. DVM shall indicate between +13.6 and +17.6 vdc. For models 070, 087 and 081, set BARO MON switch to ON.

(b) Set METER SELECT switch to 1, DVM to AC and METER FUNCT switch to AC. Increase COMP 115 VAC INPUT control until DVM indicates between 114 and 116 vac.

(41) Audio Output Verification

(a) Set METER FUNCTION switch to DC, INPUT switch to A and METER SELECT switch to 24. Connect oscilloscope to SCOPE jacks. Set scope for internal trigger, DC and adjust as necessary. Measure the maximum peak-to-peak level of tone sweep.

For models 070, 071, 072, 073, 079 and 081, it shall be 3.2 to 4.8 volts peak-to-peak.

For model 087, it shall be 1.4 to 2.7 volts peak-to-peak.

Allow three audio cycles for volume to automatically reduce.

(b) Measure the maximum peak-to-peak voice signal during the words "pull-up".

For models 070, 071, 072, 073, 079 and 081, it shall be 4.6 to 6.9 volts peak-to-peak.

For model 087, it shall be 2.0 to 3.8 volts peak-to-peak.

(c) Measure the time for one tone sweep. The time shall be 290 to 320 milliseconds.

(d) Measure the time for one complete voice message, including two tone sweeps and one "pull-up" or "terrain" (for model 079). The time shall be 1.3 to 1.5 seconds.

(e) Set AUDIO OUTPUT switch to AUX. Measure the maximum peak-to-peak voice signal during the words "pull-up" or "terrain" (for model 079).

For models 070, 071, 072, 073, 079 and 081, it shall be 4.6 to 6.9 volts peak-to-peak.

For model 087, it shall be 2.0 to 3.8 volts peak-to-peak.

(f) Set AUDIO OUTPUT switch to HI. Measure the maximum peak-to-peak level of tone sweep.

For model 070, it shall be 18.5 to 31.0 volts peak-to-peak. Clipping of voice signal is normal.

For models 071, 072, 073, 079 and 081, it shall be 17.6 to 26.4 volts peak-to-peak. Clipping of voice signal is normal.

For model 087, it shall be 7.9 to 14.5 volts peak-to-peak. Allow three audio cycles for volume to automatically reduce.

(g) Set INPUT switch to B. Measure the maximum peak-to-peak level of tone sweep.

For model 070, it shall be 9.25 to 15.5 volts peak-to-peak.

For models 071, 072, 073, 079 and 081, it shall be 8.8 to 13.2 volts peak-to-peak.

For model 087, it shall be 3.9 to 7.3 volts peak-to-peak. Allow three audio cycles for volume to automatically reduce.

(h) Set AUDIO OUTPUT to LO and PROGRAM LOAD to ON. Measure the maximum peak-to-peak level of tone sweep.

For model 070, it shall be 16 to 18 volts peak-to-peak.

For models 071, 072, 073, 079 and 081, it shall be 6.30 to 11.80 volts peak-to-peak.

For model 087, it shall be 2.8 to 7.2 volts peak-to-peak. Allow three audio cycles for volume to automatically reduce.

(i) For model 070, set PROGRAM AUDIO switch to ON after first "whoop" of an audio cycle. Observe that the scope audio level reduces after two more "whoop whoop, pull-up" cycles. Measure the maximum tone level. It shall be 9.5 to 11.5 volts peak-to-peak.

For models 071, 072, 073, 079 and 081, set PROGRAM AUDIO switch to ON after first "whoop" of an audio cycle. Observe that the scope audio level reduces after two more "whoop whoop, pull-up" or "terrain" (for model 079) cycles. Measure the maximum tone level. It shall be 2.30 to 6.50 volts peak-to-peak.

For model 087, set CADC switch to $\overline{\text{VAL}}$ until AURAL, 1, 2, 3, and G/S lights go off and then return to VAL. Observe the maximum tone level during first three audio cycles before volume automatically reduces. It shall be 5.7 to 14.4 volts peak-to-peak. There will be approximately three seconds delay before audio starts after setting CADC switch to VAL.

(42) Flashing Output Lamp Verification

(a) Set METER SELECT switch to 19. Observe scope for one complete on, off (0V, +28V) cycle. It shall be 0.7 to 1.5 seconds.

(b) Observe scope for time of light 3 (0 vdc) on duty cycle. It shall be 0.4 to 0.9 seconds.

(c) For model 073, set EXCT switch to OFF. AURAL light shall go off. Set EXCT switch to ON. In approximately three seconds AURAL light shall come on.

(43) Self Test Inhibit Verification

(a) Set BARO INPUT switch to GND, RADIO INPUT switch to FIXED and INHIBIT GND switch to ON.

(b) Set INPUT switch to A and METER SELECT switch to 7 and DVM to DC. Verify that DVM has stabilized at -6.0 to -6.4 vdc before continuing.

(c) Set SELF TEST switch to ON. In approximately two seconds CW light shall come on.

For models 070, 071, 072, 073, 079 and 081, verify that AURAL light remains off while CW light is on.

For model 087, verify that AURAL light comes on after CW light has come on.

(d) For models 070, 071, 072, 073, 079 and 081, wait for CW light to go off (approximately five seconds) before continuing. Set INH GND switch to OFF. After a delay of approximately three seconds, the speaker shall produce the word "glideslope". There shall be a noticeable delay.

For model 087, wait for CW light to go off (approximately five seconds) before continuing. Set INH GND switch to OFF. There shall be no speaker output within five seconds of setting INH GND switch to OFF.

(e) For model 070, set SELF TEST switch to OFF and wait for GPWS VAL light to go off before proceeding. Connect DVM (+) lead to auxiliary fixture TP-38. DVM shall indicate between -0.1 and +1.0 vdc. Set DVM to ohms. The DVM shall indicate between 0.0 and 3.0 ohms.

(f) For model 070, set DVM to DC and return DVM (+) lead to tester HI jack.

(44) For models 071, 072, 073, 087, 079 and 081, set SELF TEST switch to OFF and proceed to step (46).

(45) For model 073, Synchro Demodulator Tests.

(a) Set synchro dial to 0.0 ± 0.1 degrees. Set INPUT switch to C and METER SELECT switch to 11. DVM shall indicate between -60 and +60 mvdc. Note DVM indication.

(b) Set synchro dial to 315.01 ± 0.1 degrees. DVM shall indicate between +6.610 and +6.890 vdc more positive than that noted in step (a). Note DVM indication.

(c) Set synchro dial to 330.0 + 0.1 degrees. DVM shall indicate between -2.16 and -2.34 less positive than that noted in step (b).

(d) Set synchro dial to 45.1 + 0.1 degrees. DVM shall indicate between -6.645 and -6.885 vdc more negative than that noted in step (a).

(e) Note setting of COMP 115 VAC INPUT control. Slowly lower control to approximately 75 and return to original setting while monitoring DVM. The maximum change shall be within -30 to +30 mvdc.

(f) Set synchro dial to 180.0 ± 0.1 degrees. DVM shall indicate between -60 and + 60 mvdc. Note DVM indication.

(g) Set synchro dial to 135.0 ± 0.1 degrees. DVM shall indicate between +6.610 and +6.890 vdc more positive than that noted in step (f).

(h) Set synchro dial to 225.0 ± 0.1 degrees. DVM shall indicate between -6.645 and -6.855 vdc more negative than that noted in step (f). Note DVM indication.

(i) Set synchro dial to 210.0 ± 0.1 degrees. DVM shall indicate between +2.16 +2.34 vdc more positive (less negative) than that noted in step (h).

(j) Set METER SELECT switch to 12. Set synchro dial to 90.0 ± 0.1 degrees. DVM shall indicate between -60 and +60 mvdc. Note DVM indication.

(k) Set synchro dial to 45.0 ± 0.1 degrees. DVM shall indicate between +6.610 and +6.890 vdc more positive than that noted in step (j).

(l) Set synchro dial to 135.0 ± 0.1 degrees. DVM shall indicate between -6.645 and -6.855 vdc more negative than that noted in step (j). Note DVM indication.

(m) Set synchro dial to 120.0 + 0.1 degrees. DVM shall indicate between +2.16 and +2.34 vdc more positive (less negative) than that noted in step (l).

(n) Set synchro dial to 270.0 ± 0.1 degrees. DVM shall indicate between -60 and +60 mvdc. Note DVM indication.

(o) Set synchro dial to 225.0 ± 0.1 degrees. DVM shall indicate between +6.610 and +6.890 vdc more positive than that noted in step (n). Note DVM indication.

(p) Set synchro dial to 240.0 +0.1 degrees. DVM shall indicate between -2.16 and -2.34 vdc less positive than that noted in step (o).

(q) Set synchro dial to 315.0 ± 0.1 degrees. DVM shall indicate between -6.645 and -6.855 vdc more negative than that noted in step (o).

(r) Note setting of COMP 115 VAC INPUT control. Slowly lower control to approximately 75 and return to original setting while monitoring DVM. The maximum change shall be within -30 to +30 vdc.

(s) Set synchro dial to 0.0 ± 0.1 degrees, K1F1S switch to ON and METER SELECT switch to 13. DVM shall indicate between -6 and +6 mvdc.

(t) Set RAMP switch to ON. DVM shall indicate between +1.425 and +1.575 vdc.

(u) Set EIN switch to A. DVM shall indicate between -1.425 and -1.575 vdc.

(v) Set RAMP switch to OFF. Set synchro dial to 90.0 + 0.1 degrees. Set RAMP switch to ON. DVM shall indicate between -1.425 and -1.575 vdc.

(w) Set EIN switch to $\overline{A}$. DVM shall indicate between +1.425 and +1.575.

(x) Set K1F1S switch to OFF. DVM shall indicate between +0.407 and -0.444 vdc.

(y) Set EIN switch to A. DVM shall indicate between -0.407 and -0.444 vdc.

(z) Set RAMP switch to OFF and K1F1S switch to ON. Rotate synchro dial clockwise fast enough for circuit to limit, observe DVM. Verify that DVM indicates between +10.0 and +11.0 vdc throughout one revolution of synchro dial.

(aa) Rotate synchro dial counter clockwise fast enough for circuit to limit, observe DVM. Verify that DVM indicates between -10.0 and -11.0 vdc throughout one revolution of synchro dial.

(ab) Rotate synchro dial clockwise fast enough to maintain a scope display of +3 to +7 vdc. Continue through one full revolution and observe display for no discontinuities or other abnormalities.

(ac) Set synchro dial for 0.0 $\pm$ 0.1 degrees. Set scope for single sweep, line trigger 0.1 vdc per division and 1.0 second sweep. Simultaneously set RAMP switch to ON and press scope reset to begin one sweep. The sweep time shall be 0.25 to 0.65 seconds.

(ad) Set RAMP switch to OFF. Set synchro dial to 90.0 $\pm$ 0.1 degrees. Simultaneously set RAMP switch to ON and press scope reset to begin one sweep. The sweep time shall be 0.25 to 0.65 seconds.

(ae) Set RAMP switch to OFF.

(46) Set TSTR PWR and COMP PWR switches to OFF and disconnect computer from test setup.

G. Calibration Procedure

(1) For model 070 only, Voice Warning Assembly (A4) and Audio Assembly (A3) calibration.

(a) Remove screw (Ref. 10, IPL Fig. 1), loosen stud (25) and remove cover (5) from GPWC.

(b) Remove four top screws (60) which secure the A1 assembly to the chassis and swing assembly down so that A3 assembly circuitry is accessible.

(c) Prepare calibration setup the same as 3.C.(1), (2), (3) and (5), except set tester GLIDESLOPE GAIN switch to HI.

(d) Connect oscilloscope to SCOPE jacks, observing polarity.

(e) Set COMP PWR and TSTR PWR switches to ON, RADIO INPUT switch to VAR and adjust RADIO ADJ control to 6.0 ± 0.1 (numbers on dial). Set BARO INPUT switch to VAR and adjust BARO ADJ control to 3.0 ± 0.1 (numbers on dial). Set PROGRAM LOAD switch to ON, INPUT switch to A and METER SELECT switch to 24.

(f) Measure the maximum peak-to-peak voltage during the word "PULL-UP". It shall be 17.00 to 0.25 volts. If out of tolerance, adjust A3R43 (Ref. Fig. 103) for 17.00 ± 0.25 volts peak-to-peak during a "PULL-UP" word.

(g) Set PROGRAM AUDIO switch to ON. Measure, after three warning cycles have occurred, the maximum peak-to-peak voltage during the word "PULL-UP". It shall be 10.50 ± 0.25 volts. If out of tolerance, adjust A4R62 (Ref. Fig. 102) for 10.50 ± 0.25 volts peak-to-peak during a "PULL-UP" word.

(h) Set GLIDESLOPE ADJ and RADIO ADJ controls to 2.0 ± 0.1 (numbers on dial). Set FLAPS 1 and 2 switches to DOWN and INH 1 and 2 switches to FRONT. Set BARO INPUT switch to GND and GEAR 1 switch to DOWN.

(i) Measure the maximum peak-to-peak voltage during the word "Glideslope". It shall be 10.50 ± 0.25 volts. If out of tolerance, adjust A4R68 (Ref. Fig. 102) for 10.50 ± 0.25 volts peak-to-peak during a "glideslope" word.

(j) Set COMP PWR and TSTR PWR switches to OFF and swing A1 assembly into place and secure with four screws (Ref. 60, IPL Fig. 1). Install cover (5) and secure with screw (10) and stud (25).

(k) Perform functional test per para. 3.A. through 3.F.

(2) Model 087 only, Turbo-Prop Printed Wiring Assembly (A2A1) Calibration

(a) Remove screw (Ref. 10, IPL Fig. 1), loosen stud (25), and remove cover (5) from GPWC.

(b) Remove 4 top screws (70) which secure the A2 assembly (65) to the chassis and swing board down so that A2A1 assembly is visible.

(c) Set the tester controls in accordance with step 3.C.

(d) Connect the GPWC, tester, and power source as shown in Fig. 109. Test setup is identical to GPWC functional test setup.

(e) Adjust the 115 vac, 400 Hz ppwer source for 115 ± 1 vac.

(f) Connect the DVM to tester METER jacks, observe polarity.

(g) Set the following tester controls as listed.

MODE 4 switch to ON
FLAPS 1 switch to DOWN
FLAPS 2 switch to DOWN
GEAR 1 switch to DOWN
RADIO ADJ INPUT to VAR
BARO ADJ INPUT to VAR.

(h) Set TSTR PWR and COMP PWR switches to ON.

(i) Set INPUT switch to A and METER SELECT switch to 6. Decrease BARO ADJ control for a DVM indication of -0.724 to -0.726 vdc. TC light shall come on. Set ACREF switch to LO.

(j) Set METER SELECT switch to 2. Increase RADIO ADJ control until TC light goes off. Decrease RADIO ADJ control until TC light comes on. DVM shall indicate +5.38 to +6.00 vdc.

(k) Set METER SELECT switch to 6. Decrease BARO ADJ control until DVM indicates -0.899 to -0.901 vdc. Set METER SELECT switch to 2. Increase RADIO ADJ control until TC light goes off. Decrease RADIO ADJ control until TC light comes on. DVM shall indicate +9.30 to +10.50 vdc.

(l) If steps (j) or (k) are out of tolerance reselect A2A1R8 and A2A1R10 as follows:

1. Set tester PWR switch to OFF.

2. Remove screws (Ref. 515, IPL Fig. 3) and washers (525) and carefully arrange A2A1 so that components are accessible.

3. Unsolder and remove resistors A2A1R8 and A2A1R10 and substitute a decade resistance box for each. Set R8 decade to 12.7K and R10 decade to 11.3K. (Ref. Fig. 106 for location).

4. Set the PWR switch to PWR and the ACREF switch to HI and repeat steps (i), (j), and (k) while adjusting R8 and R10 decades for in tolerance condition.

NOTE: Use Figure 107 mode 4 calibration curves to assist in performance of the calibration. R8 changes both readings approximately the same amount, while R10 twists the nominal values. Note that 10 millivolt DC change in the BARO setting will change the radio trip level 242 millivolts.

5. Set the PWR switch to OFF. Remove the R8 and R10 decade boxes and install resistors for R8 and R10 closest in value to the decade (Ref. 595, IPL Fig. 3 for resistor range).

6. Set the ACREF switch to HI and repeat steps (h) through (k). Set the PWR switch to OFF.

(m) Reinstall the A2A1 board and secure with screws (Ref. 515, IPL Fig. 3) and washers (525). Swing the A2 assembly (Ref. 65, IPL Fig. 1) back into place and secure with four screws (70). Replace cover (5) and secure with screw (10) and stud (25). Perform complete functional test per paragraphs 3.A. through 3.F.

H. Troubleshooting

Troubleshooting procedures (Ref. Fig.111) indicate the most probable trouble areas for various malfunctions, their probable cause and correction.

TEST STEP	TROUBLE	PROBABLE CAUSE	CORRECTION
3.D.	Code Resistor Verification		
(3)(a)	Resistance out of tolerance.	A9R2 defective.	Replace.
(3)(b)	Resistance out of tolerance.	A9R1 defective.	Replace.
(3)(c)	Resistance out of tolerance.	A9R3 defective.	Replace.
(3)(d)	Resistance out of tolerance.	A9R6 defective.	Replace.
(3)(e)	Resistance out of tolerance.	A9R4 defective.	Replace.
(e)(f)	Resistance out of tolerance.	(a) A9R5 defective.	Replace.
		(b) Incorrect modification number selected.	Check.
3.E.	Tester Verification		
(a)	All tester lights off.	(a) Blown tester fuse F1.	Replace.
		(b) Loss of tester 115 vac input.	Connect tester to power line.
		(c) Defective tester.	Repair.
	Tester TSTR PWR 115V light only is on.	(a) Blown internal tester fuse on +24 vdc lamp supply.	Replace fuse
		(b) Defective tester.	Repair tester
	One light only is off - proceed to next test step and verify voltage levels.		
	Voltage out of tolerance.	(a) Defective tester.	Repair tester.
		(b) Excessive load (+15 vdc).	Isolate short in UUT.
	Voltage within tolerance.	(a) Defective tester light.	Replace.
		(b) Defective tester.	Repair.
(b)	Voltage out of tolerance.	See step (a) above.	

TEST STEP	TROUBLE	PROBABLE CAUSE	CORRECTION
3.F.	Initial Voltage Conditions		
(a)	+24V light is off.	See step (k)1. below.	
	+15V light is off.	See step (k)2. below.	
	+5V light is off.	See step (k)3. below.	
	-12V light is off.	See step (k)6. below.	
	-15V light is off.	See step (k)5. below.	
	-24V light is off.	See step (k)4. below.	
(k)1.	+24 vdc is high.	Chassis T1 defective.	Replace.
	+24V vdc is low. Set METER SELECT switch to 6. DVM shall indicate +15.00 ± 0.08 vdc.		
	+24 vdc is low and +15 vdc is okay.	(a) Chassis T1 defective.	Replace.
		(b) A1 assembly defective.	Test A1 per para. 4.
		(c) Broken wire from T1-3 to J3-WW or T1-5 to J3-ZZ.	Repair.
	+24 vdc and +15 vdc low.	(a) Short on +24 vdc or +15 vdc bus.	Isolate and remove short by removing circuit boards one at a time.
		(b) Broken wire from A9-15 to J3-A.	Repair.
	+24 vdc zero and +15 vdc okay.	Broken wire from J2-1 to J1A-30 or from K1-7 to J4-3.	Repair.
	+24 vdc and +15 vdc zero.	(a) Chassis T1 winding open.	Replace.
		(b) Broken wire from J1B-3 to T1-1 or J1B-4 to T1-2.	Repair.

TEST STEP	TROUBLE	PROBABLE CAUSE	CORRECTION
3.F(1)	Initial Voltage Conditions (cont'd)		
(k)2.	+15 vdc power high.	(a) A8Q2 shorted.	Replace.
		(b) A1VR7 out of calibration	Go to para. 4. and recalibrate A1R73.
	+15 vdc power low, but not zero.	(a) Broken wire J4-3 to A8Q2-C.	Repair.
		(b) A1VR7 out of calibration	Go to para. 4. and recalibrate A1R73.
	+15 vdc power zero.	Broken wire J2-2 to J4-4.	Repair.
	+15 vdc power negative.	(a) Broken wire from J3-H to A8Q2-B or J3-C to A8Q2-E.	Repair.
		(b) A1(VR7) defective.	Test A1 per para. 4.
		(c) Broken wire J8-24 to VR1-case or J8-4 to J4-1.	Repair.
(k)3.	+5 vdc power high.	Chassis VR1 defective.	Replace.
	+5 vdc power low, but not zero	(a) Chassis regulator VR1 defective.	Replace.
		(b) A4 assembly defective.	Test A4 per para. 6.
		(c) Chassis T1 defective.	Replace.
		(d) Broken wire T1-6 to J8-3 or T1-8 to J8-2.	Repair.
	+5 vdc power zero or negative.	(a) Broken wire J2-3 to VR1-2 to J9-5, VR1-1 to J9-6, or T1-7 to J8-14.	Repair.
		(b) Chassis VR1 defective.	Replace.
		(c) Chassis T1 open.	Replace.

TEST STEP	TROUBLE	PROBABLE CAUSE	CORRECTION
3.F.(1)	Initial Voltage Conditions (cont'd)		
(k)4.	-24 vdc power low, but not zero. Set METER SELECT switch to 9. DVM shall indicate -15.0 ± 0.08 vdc.		
	-24 vdc low and -15 vdc okay.	A1 assembly defective.	Test A1 per para. 4.
	-24 vdc and -15 vdc low.	Short on -24 vdc or -15 vdc bus.	Isolate and remove short by removing one circuit board at a time.
	-24 vdc power is zero.	Broken wire J2-6 to A4-8.	Repair.
(k)5.	-15 vdc power is high.	(a) A8Q1 shorted.	Replace.
		(b) A1VR8 out of calibration.	Go to para. 4. and recalibrate A1R80.
	-15 vdc power low, but not zero.	(a) Broken wire J4-8 to A8Q1-C.	Repair.
		(b) A1VR8 out of calibration.	Go to para. 4. and recalibrate A1R80.
	-15 vdc power is zero.	Broken wire J2-5 to A9-8 to J4-7.	Repair.
	-15 vdc power is positive.	(a) Broken wire J3-M to A8Q1-B, J4-6 to A8Q1-E.	Repair.
		(b) A1(VR8) assembly defective.	Test A1 per para. 4.
(k)6.	-12 vdc power out of tolerance, but not zero.	(a) Broken wire, J9-1 to VR2-1, J9-2 to VR2-2, J9-3 to VR2-case or J8-13 to A9-8.	Repair.
		(b) VR2 chassis regulator defective.	Replace.
	-12 vdc power is zero.	Broken wire, J2-4 to VR2-2.	Repair.

TEST STEP	TROUBLE	PROBABLE CAUSE	CORRECTION
3.F.(1)	Initial Voltage Conditions (cont'd)		
(1)1.	Radio Amplifier output out of tolerance.		
	(a) Voltage within ±0.2 vdc.		
	GPWS VAL light on.	Broken wire J1B-20 to J5-M.	Repair.
	GPWS VAL light off.	A2 assembly defective.	Test A2 per para. 5.
	(b) Voltage beyond ±0.2 vdc.		
	GPWS VAL light on.	(a) Broken wire J11-6 to J4-7.	Repair.
		(b) A1 assembly defective.	Test A1 per para. 4.
		(c) A5 assembly defective.	Test A5 per para. 9.
	GPWS VAL light off.	(a) Broken wire J5-AA to J7-9 to J4-5, J5-JJ to J4-2, J5-R to J7-10 to J4-6.	Repair.
		(b) A2 assembly defective.	Test A2 per para. 5.
(1)2.	Linearized altitude out of tolerance.	A2 variable gain circuit or linearizer amplifier defective.	Test A2 per para. 5.
(1)3.	Radio rate limiter out of tolerance, but not zero. Set METER SELECT INPUT switch to B and METER SELECT switch to 15.		
	(a) Voltage is less than +10 vdc.	A2 200 FT comparator defective.	Test A2 per para. 5.
	(b) Voltage is greater than +10 vdc. Set METER SELECT INPUT switch to A and METER SELECT switch to 14.		

TEST STEP	TROUBLE	PROBABLE CAUSE	CORRECTION
3.F.(1)	Initial Voltage Conditions (cont'd)		
(1)3. (cont'd)	Voltage is less than +10 vdc.	A2 50 FT comparator defective.	Test A2 per para. 5.
	Voltage is greater than +10 vdc. Set FLAPS 1 and 2 switches to DOWN and METER SELECT switch to 4. DVM shall indicate +0.340 to +0.370 vdc.		
	Voltage now in tolerance.	A1 <50 FT flap override defective.	Test A1 per para. 4.
	Voltage still out of tolerance.	(a) A1 <50 FT flap override defective.	Test A1 per para. 4.
		(b) A2 rate bias circuit or limiter circuit defective.	Test A2 per para. 5.
	Radio rate limiter output is zero.	Broken wire, J2-23 to J5-HH.	Repair.
(1)4.	Voltage out of tolerance.	Broken wire, J4-1 to J6-19,J1B-29 to J6-13,J1B-30 to J6-15.	Repair.
	Set METER SELECT switch to 10.		
	Voltage is not 0±0.010 vdc.	A3 AC baro amplifier defective.	Test A3 per para. 6.
	Voltage is 0±0.010 vdc.	A3 DC baro amplifier defective.	Test A3 per para. 6.
(1)5.	Voltage is zero.	(a) Broken wire, J2-25 to J5-YY.	Repair.
		(b) A2 defective.	Test A2 per para. 5.
	Voltage out of tolerance, but not zero. Set METER SELECT switch to 8.		
	(a) Voltage is -6.225± 0.150 vdc.	A2 complementary filter defective.	Test A2 per para. 5.
	(b) Voltage is not -6.225 ± 0.150 vdc.	A2 trip equation circuit defective.	Test A2 per para. 5.

TEST STEP	TROUBLE	PROBABLE CAUSE	CORRECTION
3.F.(1)	Initial Voltage Conditions (cont'd)		
(1)6.	Voltage out of tolerance.	(a) Broken wire, J5-EE to J7-2.	Repair.
		(b) A2 baro rate filter circuit defective.	Test A2 per para. 5.
3.F.(2)	Initial Logic Conditions		
(a)1.	2450 FT light is off.	Set METER SELECT switch to 19. Observe DVM.	
	If less than +12 vdc, but not zero.	(a) A2 2450 FT comparator defective.	Test A2 per para. 5.
		(b) $\overline{\text{SINK}}$ control logic defective.	Test A1 per para. 4.
	If voltage is zero.	Broken wire, J2-8 to J5-X.	Repair.
(a)2.	1000 FT light is off.	Set METER SELECT switch to 18. Observe DVM.	
	If less than +12 vdc, but not zero.	(a) A2 1000 FT comparator defective.	Test A2 per para. 5.
		(b) A1 test logic defective.	Test A1 per para. 4.
		(c) A6 glideslope logic defective.	Test A2 per para. 10.
	If voltage is zero.	Broken wire, J2-9 to J5-RR.	Repair.
(a)3.	700 FT light is off.	Set METER SELECT switch to 17. Observe DVM.	
	If less than +12 vdc, but not zero.	(a) A2 700 FT comparator defective.	Test A2 per para. 5.
		(b) A1 take-off logic defective.	Test A1 per para. 4.
		(c) A3 gear logic defective.	Test A3 per para. 6.
	If voltage is zero.	Broken wire, J2-10 to J5-NN.	Repair.

TEST STEP	TROUBLE	PROBABLE CAUSE	CORRECTION
3.F.(2)	Initial Logic Conditions (cont'd)		
(a)4.	300 FT light is off.	A6 300 FT comparator defective.	Test A6 per para. 10.
(a)5.	TC light is off. Set METER SELECT switch to 15. Observe DVM.		
	If voltage is zero.	Broken wire, J2-12 to J5-J.	Repair.
	If voltage is less than +12 vdc, but not zero.	(a) A2 terrain clearance defective.	Test A2 per para. 5.
		(b) A1 warning control logic defective.	Test A1 per para. 4.
(a)6.	50 FT light is off. Set METER SELECT switch to 14. Observe DVM.		
	If voltage is zero.	Broken wire, J2-13 to A9-6.	Repair.
	If voltage is less than +12 vdc, but not zero.	(a) A2 50 FT comparator defective.	Test A2 per para. 5.
		(b) A1 warning control logic defective.	Test A1 per para. 4.
(a)7.	SINK light is on.	(a) A2 sinkrate circuit defective.	Test A2 per para. 5.
		(b) A1 sinkrate logic defective.	Test A1 per para. 4.
(a)8.	CW light is on. Set METER SELECT switch to 23. Observe DVM.		
	If voltage is zero.	Broken wire J2-14 to J11-3.	Repair.
	If voltage is less than +12 vdc, but not zero.	(a) A2 $\overline{CW}$ comparator defective.	Test A2 per para. 5.
		(b) Broken wire J11-13 to J5-E.	Repair.
(a)9.	FD light is on. Set METER SELECT switch to 13. Observe DVM.		
	If voltage is zero.	Broken wire J2-31 to J7-6.	Repair.
	If voltage is out of tolerance, but not zero, set FLAPS switch to UP. Observe DVM for +12 vdc minimum.		

TEST STEP	TROUBLE	PROBABLE CAUSE	CORRECTION
3.F.(2)	Initial Logic Conditions (cont'd)		
(a)9. (cont'd)	Voltage is in tolerance.	A3 flap input buffer defective.	Test A3 per para. 6.
	Voltage is low.	(a) A3 flap logic defective.	Test A3 per para. 6.
		(b) A1 warning control logic defective.	Test A1 per para. 4.
(a)10.	GSS light is on. Rotate GLIDESLOPE ADJ control fully clockwise and wait 8 seconds.		
	GPWS VAL light is off.	(a) A6 TEST circuit defective.	Test A6 per para. 10.
		(b) A1 TEST circuit defective.	Test A1 per para. 4.
		(c) A6 input buffer defective.	Test A6 per para. 10.
	GPWS VAL light is on and GSS light is off.	A6 altitude bias circuit defective.	Test A6 per para. 10.
	GPWS VAL light is on and GSS light on. Set METER SELECT INPUT switch to B and METER SELECT switch to 14. Observe DVM.		
	Voltage is less than +1 vdc.	A6 GS soft comparator defective.	Test A6 per para. 10.
	Voltage is greater than +1 vdc.	A6 low pass filter defective.	Test A6 per para. 10.
(a)11.	GSH light is on.	A6 GS hard comparator defective.	Test A6 per para. 10.
(a)12.	200 FT light is off. Set METER SELECT INPUT switch to B and METER SELECT switch to 15. Observe DVM.		
	If voltage is zero.	Broken wire J2-36 to J5-ZZ.	Repair.
	If voltage is less than +12 vdc, but not zero.	A2 200 FT comparator defective.	Test A2 per para. 5.

TEST STEP	TROUBLE	PROBABLE CAUSE	CORRECTION
3.F.(2)	Initial Logic Conditions (cont'd)		
(b)	All lights are on.	A5 lamp test circuit defective.	Test A5 per para. 9.
	RADIO ALT light is on.	(a) A5 radio alt. lamp driver defective.	Test A5 per para. 9.
		(b) A7M2 (Q2) defective.	Replace.
	GEAR light is on.	(a) A5 gear lamp driver defective.	Test A5 per para. 9.
		(b) A7M3 (Q4) defective.	Replace.
	AIR DATA light is on.	(a) A5 air data lamp driver defective.	Test A5 per para. 9.
		(b) A7M2 (Q2) defective.	Replace.
	FLAP DN light is on.	(a) A5 flap lamp driver defective.	Test A5 per para. 9.
		(b) A7M2 (Q3) defective.	Replace.
	GPWC OK light is on.	(a) A5 GPWC OK lamp driver defective.	Test A5 per para. 9.
		(b) A7M3 (Q1) defective.	Replace.
	GS VAL light is on.	(a) A5 GS VAL lamp driver defective.	Test A5 per para. 9.
		(b) A7M2 (Q3) defective.	Replace.
(c)	FD light is on.	(a) Broken wire J6-4 to J1A-24.	Repair.
		(b) A3 flap input buffer defective.	Test A3 per para. 6.
	GPWS VAL light is on. Depress computer SELF TEST switch and hold.		
	Computer lights momentarily come on, then only GPWC OK light stays on.	(a) Broken wire J3-AA to K2-3,J4-3 to K2-7, or A1W9.	Repair.
		(b) Chassis validity relay K2 defective.	Replace.
		(c) A1 validity driver circuit defective.	Test A1 per para. 4.

TEST STEP	TROUBLE	PROBABLE CAUSE	CORRECTION
3.F.(2)	Initial Logic Conditions (cont'd)		
(c) (cont'd)	Computer lights momentarily come on, then all lights go off.	(a) Broken wire J11-23 to K1-7 or A5P1-23 to A5E23.	Repair.
		(b) A1 $\overline{\text{INHIBIT}}$ circuit defective.	Test A1 per para. 4.
		(c) A5 $\overline{\text{INHIBIT}}$ circuit defective.	Test A5 per para. 9.
	Computer lights momentarily come on, then only G/S VAL light stays on. Rotate GLIDESLOPE ADJ dial fully counterclockwise and set METER SELECT INPUT switch to B and METER SELECT switch to 13. Observe DVM.		
	Voltage is +1 vdc maximum.	(a) Broken wire J12-26 to J1A-23, J12-27 to J1A-22, J12-29 to J1B-31, J12-30 to J1B-32.	Repair.
		(b) A6 G/S buffer circuit defective.	Test A6 per para. 10.
	Voltage is +12 vdc maximum and GPWS VAL light is on.	A6 $\overline{\text{GS FAULT}}$ circuit defective.	Test A6 per para. 10.
	Voltage is +12 vdc minimum and GPWS VAL light is off.	A6 GS buffer or $\overline{\text{GS FAULT}}$ circuit defective.	Test A6 per para. 10.
	Computer lights momentarily come on, then only AIR DATA light stays on. Set SELF TEST switch to ON and set METER SELECT switch to 5.		
	Voltage is more positive than -1 vdc or more negative than -4 vdc.	(a) A3 baro reference circuit defective.	Test A3 per para. 6.
		(b) Broken wire J1B-39 to J6-29 or A3E29.	Repair.

TEST STEP	TROUBLE	PROBABLE CAUSE	CORRECTION
3.F.(2)	Initial Logic Condtions (cont'd)		
(c) (cont'd)	Voltage is -1 vdc to -4 vdc.	(a) A3 $\overline{\text{BARO INHIBIT}}$ circuit defective.	Test A3 per para. 6.
		(b) Broken wire J1B-27 to J6-12,A3-E27. For models -071,-072, -073,-079 only - J6-27 to J1A-7.	Repair.
	Computer lights momentarily come on, then only RADIO ALT light stays on.	(a) Broken wire J11-24 to J5-S,J11-26 to J1B-19,A4E24, or A5E26.	Repair.
		(b) A5 radio validity circuit defective.	Test A5 per para. 9.
(d)	FD light is off.	A3 assembly defective.	Test A3 per para. 6.
	GD light is off.	(a) Broken wire J2-32 to J7-5.	Repair.
		(b) A3 gear down buffer or latch circuit defective.	Test A3 per para. 6.
	T.OFF light is on.	(a) Broken wire J5-KK to J3-LL.	Repair.
		(b) A1 $\overline{\text{INTEGRATE}}$ logic defective.	Test A1 per para. 4.
		(c) A2 take-off loss circuit defective.	Test A2 per para. 5.
	AURAL light is on.	(a) A1 assembly defective.	Test A1 per para. 4.
		(b) Broken wire J5-CC to J3-L.	Repair.
	Lights 1 and 2 are on.	(a) A1 lamp relay driver defective.	Test A1 per para. 4.
		(b) Chassis K1 defective.	Replace.

TEST STEP	TROUBLE	PROBABLE CAUSE	CORRECTION
3.F.(2)	Initial Logic Conditions (cont'd)		
(d) (cont'd)	Light 3 is on or flashing.	A1 assembly defective.	Test A1 per para. 4.
	EVENT light is on.	A1 event lamp driver defective.	Test A1 per para. 4.
	GPWS VAL light is on.	A1 assembly defective.	Test A1 per para. 4.
	G/S light is on.	A6 GS logic or GS lamp driver circuit defective.	Test A6 per para. 10.
(f)1.	Voltage at METER SELECT 15 is zero.	See below.	
	Set METER SELECT switch to 16 and proceed as noted below.		
	Voltage at METER SELECT 16 is not zero.	For models -070,-071, -073,-081 and -087 only -	
		Broken wire J2-61 to A10P1-E7,A7P2-1 to A7B1-1,A10-E7.	Repair.
		Isolation resistor A10R1 or indicator A7B1 defective.	Replace.
		For models -072 and -079 only -	
		Broken wire J2-61 to A10P1-E1, A10-E7.	Repair.
		A10R1 or A10R6 defective.	Replace.
	Voltage at METER SELECT 16 is zero.	For models -070,-071, -073,-081 and -087 only -	
		Broken wire A7-E34 to A7B5-3 or A7-E1.	Repair.
		For models -072 and -079 only -	
		Broken wire A7-E1, A7-E34 to P2-6,A10-E6.	Repair.

TEST STEP	TROUBLE	PROBABLE CAUSE	CORRECTION
3.F.(2)	Initial Logic Conditions (cont'd)		
(f)1. (cont'd)	Voltage at METER SELECT 15 out of tolerance, but not zero.	(a) A5 ball driver defective.	Test A5 per para. 9.
		(b) A7M1 defective.	Replace.
(f)2.	Voltage at METER SELECT 16 is zero.	For models -070,-071, -073,-081 and -087 only -	
		Broken wire J2-62 to A10P1-E8,A7P2-2 to A7B2-1,A10E5.	Repair.
		Isolation resistor A10R2 or indicator A7B2 defective.	Replace.
		For models -072 and -079 only -	
		Broken wire J2-62 to A10P1-E8,A10E8.	Repair.
		A10R2 or A10R7 defective.	Replace.
	Voltage at METER SELECT 16 out of tolerance, but not zero.	(a) A5 ball driver defective.	Test A5 per para. 9
		(b) A7M1 defective.	Replace.
(f)3.	Voltage at METER SELECT 17 is zero.	For models -070,-071, -073,-081 and -087 only -	
		Broken wire J2-63 to A10P1-E9,A7P2-3 to A7B3-1.	Repair.
		Isolation resistor A10R3 or indicator A7B3 defective.	Replace.
		For models -072 and -079 only -	
		Broken wire J2-63 to A10P1-E3,A10E9.	Repair.
		A10R3 or A10R8 defective.	Replace.

TEST STEP	TROUBLE	PROBABLE CAUSE	CORRECTION
3.F.(2)	Initial Logic Conditions (cont'd)		
(f)3. (cont'd)	Voltage at METER SELECT 17 out of tolerance, but not zero.	(a) A5 ball driver defective.	Test A5 per para. 9.
		(b) A7M1 defective.	Replace.
(f)4.	Voltage at METER SELECT 18 is zero.	For models -070,-071, -073,-081 and -087 only -	
		Broken wire J2-64 to A10P1-E10,A7P2-4 to A7B4-1,A10E4.	Repair.
		Isolation resistor A10R4 or indicator A7B4 defective.	Replace.
		For models -072 and -079 only -	
		Broken wire J2-64 to A10P1-E4,A10E10.	Repair.
		A10R4 or A10R9 defective.	Replace.
	Voltage at METER SELECT 18 out of tolerance, but not zero.	(a) A5 ball driver defective.	Test A5 per para. 9.
		(b) A7M1 defective.	Replace.
(f)5.	Voltage at METER SELECT 19 is zero.	For models -070,-071, -073 -081 and -087 only -	
		Broken wire J2-65 to A10P1-E11,A7P2-5 to A7B5-1,A10E5.	Repair.
		Isolation resistor A10R5 or indicator A7B5 defective.	Replace.
		For models -072 and -079 only -	
		Broken wire J2-65 to A10P1-E5, A10E11.	Repair.
		A10R5 or A10R10 defective.	Replace.

TEST STEP	TROUBLE	PROBABLE CAUSE	CORRECTION
3.F.(2)	Initial Logic Conditions (cont')		
(f)5. (cont'd)	Voltage at METER SELECT 19 out of tolerance, but not zero.	(a) A5 ball driver defective.	Test A5 per para. 9.
		(b) A7M2 defective.	Replace.
(g)	One or more computer front panel indicators is white.	(a) Broken wire J4-9 to K2-6,K2-6 to K1-6 K1-6 to K1-2,K1-2 to J11-21,A7E2,A7-E35 to SW2, SW2 to indicator B1-4, B2-4,B3-4,B4-4 B5-4.	Repair.
		(b) SW2 or B1,B2,B3,B4, B5 defective.	Replace.
(h)	FLAP DN light is on, other front panel lights are off.	(a) A3 flap logic circuit defective.	Test A3 per para. 6.
		(b) A5 lamp driver circuit defective.	Test A5 per para. 9.
	FLAP DN light is on, other front panel lights are on.	A5 V Ref. No. 2 circuit defective.	Test A5 per para. 9.
3.F.(3)	Radio Altitude Input to 300 Feet.		
(c)1.	Voltage is zero.	Broken wire J2-20 to J5-H.	Repair.
	Voltage is out of tolerance, but not zero.	(a) Broken wire J1B-21 to J5-C.	Repair.
		(b) A2 test altitude generator or radio buffer circuit defective.	Test A2 per para. 5.
(c)2.	Voltage is zero.	Broken wire J2-21 to J5-N.	Repair.
(c)3.	Voltage is out of tolerance.	A3 gear down latch buffer circuit defective.	Test A3 per para. 6.

TEST STEP	TROUBLE	PROBABLE CAUSE	CORRECTION
3.F.(3)	Radio Altitude Input to 300 Feet.		
(c)4.	Voltage is out of tolerance.	A3 AC baro buffer circuit defective.	Test A3 per para. 6.
(c)5.	Voltage is out of tolerance.	(a) A1 control logic defective.	Test A1 per para. 4.
		(b) Broken wire J5-Z to J3-XX,J3-NN to J4-6.	Repair.
		(c) A2 bias circuit or limit circuit defective.	Test A2 per para. 5.
(c)6.	Voltage is zero.	Broken wire J2-26 to J5-WW.	Repair.
	Voltage out of tolerance, but not zero.	A2 trip equation circuit defective.	Test A2 per para. 5.
(d)	200 FT light is on.	A2 200 FT comparator defective.	Test A2 per para. 4.
	50 FT light is on.	A2 50 FT comparator defective.	Test A2 per para. 4.
	TC light is on.	A2 assembly defective.	Test A2 per para. 5.
3.F.(4)	DC Baro Signal Processing		
(c)	Voltage is zero.	Broken wire J2-29 to J7-2.	Repair.
	Voltage is out of tolerance, but not zero.	(a) Broken wire J1B-28 to J6-16.	Repair.
		(b) A3 DC baro clamp circuit defective.	Test A3 per para. 6.
(d)	Voltage is zero.	Broken wire J2-28 to J5-UU,U5-EE to J7-2.	Repair.
	Voltage is out of tolerance, but not zero.	(a) A2 Baro #2 filter circuit defective.	Test A2 per para. 5.
		(b) Broken wire J5-EE to J4-2.	Repair.

TEST STEP	TROUBLE	PROBABLE CAUSE	CORRECTION
3.F.(4)	DC Baro Signal Processing (cont'd)		
(e)	T OFF light is on.	(a) A1 control logic defective.	Test A1 per para. 4.
		(b) A2 take-off loss integrator and control circuit defective.	Test A2 per para. 5.
		(c) Broken wire J5-KK to J3-LL.	Repair.
(f)	TC light is off.	A2 <TC circuit defective.	Test A2 per para. 5.
	SINK light is on.	A2 sinkrate circuit defective.	Test A2 per para. 5.
(g)	GD light is off.	A3 gear latch driver defective.	Test A3 per para. 6
	T.OFF light is off. Set METER SELECT switch to 21.		Observe DVM.
	Voltage is zero.	Broken wire J2-15 to J5-MM.	Repair.
	Voltage is less than +12 vdc, but not zero.		
	Press and hold computer SELF TEST switch.		
	Computer lights momentarily come on, then the GEAR light goes off.	A3 gear buffer circuit defective.	Test A3 per para. 6.
	GEAR light stays on. Set METER SELECT switch to 22.		
	Voltage less than +2.25 vdc.	(a) Broken wire J7-3 to J4-B.	Repair.
		(b) A1 control logic or T.O. latch circuit defective.	Test A1 per para. 4.
		(c) A2 take-off loss integrator and control circuit defective.	Test A2 per para. 5.
	Voltage is greater than +2.25 vdc.	A2 take-off loss comparator defective.	Test A2 per para. 5.

TEST STEP	TROUBLE	PROBABLE CAUSE	CORRECTION
3.F.(4)	DC Baro Signal Processing (cont'd)		
(h)1.	AURAL light is off, 1 light is on.	(a) Broken wire J3-CC to J1B-25 or A1W5.	Repair.
		(b) A1 lamp driver defective.	Test A1 per para. 4.
	AURAL light is off, 1 light is off.	(a) Broken wire J1B-6 to T1-4 to J4-9.	Repair.
		(b) A1 control logic circuit defective.	Test A1 per para. 4.
(h)2.	1 light is off, 2 light is on.	(a) Broken wire J1B-11 to K1-1.	Repair.
		(b) Chassis relay K1 defective.	Replace.
	2 light is off, 1 light is on.	(a) Broken wire J1B-9 to K1-5.	Repair.
		(b) Chassis relay K1 defective.	Replace.
	1 and 2 lights are both off.	(a) Broken wire J3-EE to K1-3 to A1W8.	Repair.
		(b) A1 lamp driver circuit defective.	Test A1 per para. 4.
(h)3.	3 light does not flash.	(a) A1 flasher circuit defective.	Test A1 per para. 4.
		(b) Broken wire J1A-13 to J3-U.	Repair.
(h)4.	EVENT light is off.	Broken wire J1B-10 to J3-W or A1W7.	Repair.
(h)5	GPWS VAL light is on.	A1 test logic circuit defective.	Test A1 per para. 4.
(h)6.	TAKEOFF (3) indicator is black.	(a) Broken wire J3-TT to J11-15,A7E5, A7E18 to A7B3-1.	Repair.
		(b) A5 assembly defective.	Test A5 per para. 9.

TEST STEP	TROUBLE	PROBABLE CAUSE	CORRECTION
3.F.(4)	DC Baro Signal Processing (cont'd)		
(h)7.	GPWC OK light is on.	A5 lamp driver defective.	Test A5 per para. 9.
(i)	Voltage out of tolerance.	A7M1 (Q3) defective.	Replace.
	For models -072 or -079 also see (h)6. above.		
(j)	No "whoop whoop" but voice is normal.	A4 chip select circuit defective.	Test A4 per para. 7.
	No voice, but "whoop whoop" is normal.	A4 chip select circuit defective.	Test A4 per para. 7.
	"Glideslope" voice is heard.	A4 chip select circuit defective.	Test A4 per para. 7.
(m)1.	T OFF light is on.	A2 take-off loss integrator control defective.	Test A2 per para. 5.
(m)2.	AURAL light is on.	A1 lamp driver defective.	Test A1 per para. 4.
(m)3.	1 light is on.	(a) A1 relay driver defective.	Test A1 per para. 4.
		(b) Chassis relay K1 defective.	Replace.
(m)4.	2 light is on.	Chassis relay K1 defective.	Replace.
(m)5.	3 light is on or flashing.	A1 flasher circuit defective.	Test A1 per para. 4.
(m)6.	EVENT light is on.	A1 lamp driver defective.	Test A1 per para. 4.
(m)7.	G/S light is on.	A6 GS logic defective.	Test A6 per para. 10.
(o)	Voltage at METER SELECT 5 out of tolerance.	A3 DC Baro buffer circuit defective.	Test A3 per para. 6.
(p)	Voltage at METER SELECT 9 out of tolerance.	A2 baro #2 filter defective.	Test A2 per para. 5.

TEST STEP	TROUBLE	PROBABLE CAUSE	CORRECTION
3.F.(4)	DC Baro Signal Processing (cont'd)		
(q)	Warning is present.	(a) A4 clock control circuit defective.	Test A4 per para. 7.
		(b) Broken wire A4W9.	Repair.
(s)	Voltage out of tolerance.	(a) Broken wire J3-UU to J6-30 or A3E30.	Repair.
		(b) A3 baro clamp circuit defective.	Test A3 per para. 6.
3.F.(5)	AC Baro Signal Processing		
(j)	Voltage out of tolerance.	A3 AC baro clamp or AC baro buffer circuit defective.	Test A3 per para. 6.
(k)	Voltage out of tolerance.	(a) A3 AC reference circuit defective.	Test A3 per para. 6.
		(b) Broken wire J1B-37 to J6-25 or A3E25.	Repair.
(q)	Voltage out of tolerance.	A3 AC reference circuit defective.	Test A3 per para. 6.
(t) and (w)	Voltage out of tolerance.	A3 reference level select circuit defective.	Test A3 per para. 6.
(z)	Voltage out of tolerance.	A3 AC baro buffer circuit defective.	Test A3 per para. 6.
(aa)	T OFF light is on.	(a) Broken wire J1B-23 to J6-18.	Repair.
		(b) A3 gear buffer circuit defective.	Test A3 per para. 6.
3.F.(6)	Flap Delay Logic		
(a)	FD light is on.	(a) Broken wire J1B-24 to J6-10.	Repair.
		(b) A3 flaps buffer circuit defective.	Test A3 per para. 6.
	Time out of tolerance.	A3 delay circuit defective.	Test A3 per para. 6.

TEST STEP	TROUBLE	PROBABLE CAUSE	CORRECTION
3.F.(6)	Flap Delay Logic (cont'd)		
(b)	T OFF light is off.	A1 control logic circuit defective.	Test A1 per para. 4.
3.F.(7)	Altitude Loss Comparator Verification		
(b) and (e)	Time out of tolerance.	(a) A2 take-off loss integrator or comparator defective.	Test A2 per para. 5.
		(b) A2 radio altitude linearizer defective.	Test A2 per para. 5.
(f)	AURAL light is on.	(a) A3 baro validity circuit defective.	Test A3 per para. 6.
		(b) A1 control logic defective.	Test A1 per para. 4.
	GPWS VAL light stays off.	(a) A1 validity relay driver defective.	Test A1 per para. 4.
		(b) Chassis relay K2 defective.	Replace.
		(c) Broken wire J1B-12 to K2-8.	Repair.
	Time out of tolerance.	A1 validity delay defective.	Test A1 per para. 4.
(g)	Computer AIR DATA light is on.	A5 air data lamp driver defective.	Test A5 per para. 9.
(i)1.	700 FT light is on.	A2 700 FT comparator or radio altitude linearizer defective.	Test A2 per para. 5.
(i)2.	300 FT light is on.	(a) A6 pull-up resistor and 300 FT comparator defective.	Test A6 per para. 10.
		(b) Broken wire J2-11 to J12-23.	Repair.
(i)3.	TC light is on.	A2 <TC circuit defective.	Test A2 per para. 5.

TEST STEP	TROUBLE	PROBABLE CAUSE	CORRECTION
3.F.(7)	Altitude Loss Comparator Verification (cont'd)		
(i)4.	GD light is on.	(a) A3 gear latch circuit defective.	Test A3 per para. 6.
		(b) Broken wire J7-7 to J5-TT.	Repair.
3.F.(8)	Terrain Clearance Comparator Verification		
(a)	Voltage out of tolerance.	A2 assembly defective.	Test A2 per para. 5.
(b)1.	AURAL light is off.	(a) A1 assembly defective.	Test A1 per para. 4.
		(b) Broken wire J5-D to J3-N.	Repair.
(b)2.	GEAR/FLAP (4) indicator is black.	(a) A5 assembly defective.	Test A5 per para. 9.
		(b) A7M1 or A7B4 defective.	Replace.
		(c) Broken wire J11-14 to J3-K.	Repair.
(c)	Voltage out of tolerance.	A7M1 (Q4) defective.	Replace.
(d)1.	GD light is off.	(a) A3 assembly defective.	Test A3 per para. 6.
		(b) Broken wire J7-5 to J5-PP.	Repair.
(d)2.	TC light is on.	A2 assembly defective.	Test A2 per para. 5.
(d)3.	AURAL light is on.	A1 assembly defective.	Test A1 per para. 4.
(f)	Voltage out of tolerance.	A2 assembly defective.	Test A2 per para. 5.
(g)	AURAL light is on.	A1 assembly defective.	Test A1 per para. 4.

TEST STEP	TROUBLE	PROBABLE CAUSE	CORRECTION
3.F.(8)	Terrain Clearance Comparator Verification (cont'd)		
(h)	TC light is on.	A2 assembly defective.	Test A2 per para. 5.
(i)	Voltage out of tolerance.	A2 assembly defective.	Test A2 per para. 5.
(j)	AURAL light is off.	A1 assembly defective.	Test A1 per para. 4.
(k)	Voltage out of tolerance.	A2 assembly defective.	Test A2 per para. 5.
(l)	TC light is off.	A2 assembly defective.	Test A2 per para. 5.
(m)	Voltage out of tolerance.	A2 assembly defective.	Test A2 per para. 5.
(n)	Voltage out of tolerance.	A2 assembly defective.	Test A2 per para. 5.
(o)	T OFF light is on.	A1 assembly defective.	Test A1 per para. 4.
(p)	Any light is on.	(a) A1 assembly defective.	Test A1 per para. 4.
		(b) A3 assembly defective.	Test A3 per para. 6.
		(c) Broken wire J1A-14 to J6-6.	Repair.
(q)	FD light remains on.	A3 assembly defective.	Test A3 per para. 6.
	T.OFF light stays off.	A1 assembly defective.	Test A1 per para. 4.
(r)	TC light is off.	A2 assembly defective.	Test A2 per para. 5.
(s)	Voltage out of tolerance.	A2 assembly defective.	Test A2 per para. 5.
(t)	Voltage out of tolerance.	A2 assembly defective.	Test A2 per para. 5.

TEST STEP	TROUBLE	PROBABLE CAUSE	CORRECTION
3.F.(9)	Sinkrate Comparator Verification		
(d)	Voltage out of tolerance.	(a) A2 assembly defective.	Test A2 per para. 5.
		(b) Broken wire J2-16 to J5-Y.	Repair.
(e)	AURAL light is off.	A1 assembly defective.	Test A1 per para. 4.
	HI SINK (1) indicator is black.	(a) A5 assembly defective.	Test A5 per para. 9.
		(b) A7M1 or A7B1 defective.	Replace.
		(c) Broken wire J3-V to J11-7.	Repair.
(f)	Voltage out of tolerance.	(a) A5 assembly defective.	Test A5 per para. 9.
		(b) A7M1 (Q1) defective.	Replace.
(g)	Voltage out of tolerance.	A2 assembly defective.	Test A2 per para. 5.
(h)	Voltage out of tolerance.	A2 assembly defective.	Test A2 per para. 5.
(i)	Voltage out of tolerance.	A2 assembly defective.	Test A2 per para. 5.
(j)	Voltage out of tolerance.	A2 assembly defective.	Test A2 per para. 5.
(k)	1000 FT light is on.	A2 assembly defective.	Test A2 per para. 5.
	GSS light is on.	A6 assembly defective.	Test A6 per para. 10.
(l)	Voltage out of tolerance.	A2 assembly defective.	Test A2 per para. 5.
(m)	Voltage out of tolerance.	A2 assembly defective.	Test A2 per para. 5.
(n)	Voltage out of tolerance.	A2 assembly defective.	Test A2 per para. 5.

TEST STEP	TROUBLE	PROBABLE CAUSE	CORRECTION
3.F.(10)	Sinkrate Inhibit Logic		
(a)	AURAL light is off.	A2 assembly defective.	Test A2 per para. 5.
(b)	GPWS VAL light is off.	A3 assembly defective.	Test A3 per para. 6.
(c)	Time is out of tolerance.	(a) A1 assembly defective.	Test A1 per para. 4.
		(b) A3 assembly defective.	Test A3 per para. 6.
(d)	AURAL light is on.	(a) A1 assembly defective.	Test A1 per para. 4.
		(b) A2 assembly defective.	Test A2 per para. 5.
3.F.(11)	Radio Comparator Verification (2450 Feet)		
(a) and (b)	Voltage out of tolerance.	A2 assembly defective.	Test A2 per para. 5.
(c) thru (g)	Voltage out of tolerance.	A2 assembly defective.	Test A2 per para. 5.
3.F.(12)	Airborne Self Test Logic		
(a)	No probable trouble or cause. Continue test.		
(b)	No response from scope.	A1 assembly defective.	Test A1 per para. 4.
	Time out of tolerance.	A1 assembly defective.	Test A1 per para. 4.
	EVENT light is on.	A1 assembly defective.	Test A1 per para. 4.
	G/S light is off and GSS light is on indicating +12 vdc minimum at J2-17.	A6 assembly defective.	Test A6 per para. 10.

TEST STEP	TROUBLE	PROBABLE CAUSE	CORRECTION
3.F.(12)	Airborne Self Test Logic		
(b) (cont'd)	G/S light is off and GSS light is off indicating +1 vdc maximum at J2-17.	(a) A1 assembly defective	Test A1 per para. 4.
		(b) A6 assembly defective	Test A6 per para. 10.
	GPWS VAL light is off.	A1 assembly defective.	Test A1 per para. 4.
(c)	AURAL light is on.	A1 assembly defective.	Test A1 per para. 4.
(d)	AURAL light is off.	A1 assembly defective.	Test A1 per para. 4.
	No "glideslope" voice.	(a) A4 assembly defective.	Test A4 per para. 7.
		(b) A6 assembly defective.	Test A6 per para. 10.
	No "whoop whoop" voice.	A4 assembly defective.	Test A4 per para. 7.
	No "pull up" or "terrain" voice.	A4 assembly defective.	Test A4 per para. 7.
	No voice warnings.	(a) A4 assembly defective.	Test A4 per para. 7.
		(b) A3 assembly defective.	Test A3 per para. 6.
3.F.(13)	Radio Comparator Verification (1000 Feet)		
(a) and (b)	Voltage out of tolerance and/or AURAL light is on.	A2 assembly defective.	Test A2 per para. 5.
3.F.(14)	Airborne Self Test Inhibit Logic		
(a)	AURAL light is on.	(a) A1 assembly defective.	Test A1 per para. 4.
		(b) Broken wire J1B-16 to J3-FF.	Repair.

TEST STEP	TROUBLE	PROBABLE CAUSE	CORRECTION
3.F.(14)	Airborne Self Test Inhibit Logic (cont'd)		
(b)	AURAL light is on.	(a) A1 assembly defective.	Test A1 per para. 4.
		(b) Broken wire J1B-8 to J3-JJ.	Repair.
	Time out of tolerance.	A1 assembly defective.	Test A1 per para. 4.
	GPWC VAL light is off.	A1 assembly defective.	Test A1 per para. 4.
(c)	AURAL and/of G/S lights are on.	A5 assembly defective.	Test A5 per para. 9.
	RADIO ALT light is on.	(a) A5 assembly defective.	Test A5 per para. 9.
		(b) A7DS4 light defective.	Replace.
		(c) A7M3 (Q2) defective.	Replace.
(d)	Time out of tolerance.	A5 assembly defective.	Test A5 per para. 9.
(e)	AURAL and/or G/S light is in wrong state.	A1 assembly defective.	Test A1 per para. 4.
(f)	Time out of tolerance.	A1 assembly defective.	Test A1 per para. 4.
3.F.(15)	Radio Comparator Verification (700 FT)		
(a) and (b)	Voltage out of tolerance.	A2 assembly defective.	Test A2 per para. 5.
3.F.(16)	Closure Time Constant Verification		
(a) and (b)	Voltage out of tolerance.	A2 assembly defective.	Test A2 per para. 5.
(c) or (c)1.	Voltage out of tolerance or CW light is off.	A2 assembly defective.	Test A2 per para. 5.

TEST STEP	TROUBLE	PROBABLE CAUSE	CORRECTION
3.F.(16)	Closure Time Constant Verification		
(c)1.	AURAL light is off.	A1 assembly defective.	Test A1 per para. 4.
(c)2.	TERRAIN (2) indicator is black.	A5 assembly defective.	Test A5 per para. 9.
(d)	Voltage out of tolerance.	(a) A5 assembly defective.	Test A5 per para. 9.
		(b) A7M1(Q2) defective.	Replace.
		(c) A10R2 defective.	Replace.
3.F.(17)	Radio Comparator Verification (300 Feet)		
(a)	Voltage out of tolerance.	A6 assembly defective.	Test A6 per para. 10.
(b)	Voltage out of tolerance.	A6 assembly defective.	Test A6 per para. 10.
3.F.(18)	Radio Comparator Verification (200 Feet)		
(a) and (b)	Voltage out of tolerance.	A2 assembly defective.	Test A2 per para. 5.
3.F.(19)	Radio Rate Limits and Bias Circuit Verification		
(a) thru (d)	Voltage out of tolerance.	A2 assembly defective.	Test A2 per para. 5.
3.F.(20)	Closure Comparator Verification		
(a) and (b)	Voltage out of tolerance.	A2 assembly defective.	Test A2 per para. 5.
3.F.(21)	Radio Comparator Verification (50 Feet)		
(a) and (b)	Voltage out of tolerance.	A2 assembly defective.	Test A2 per para. 5.

TEST STEP	TROUBLE	PROBABLE CAUSE	CORRECTION
3.F.(22)	Closure Warning Verification		
(b),(c) and (d)	Voltage out of tolerance.	A2 assembly defective.	Test A2 per para. 5.
3.F.(23)	Glideslope Soft Comparator Verification (GSS)		
(a) and (b)	Voltage out of tolerance.	A6 assembly defective.	Test A6 per para. 10.
3.F.(24)	Glideslope Hard Comparator Verification (GSH)		
(a) and (b)	Voltage out of tolerance.	A6 assembly defective.	Test A6 per para. 10.
3.F.(25)	Glideslope Warning Logic		
(a)	G/S light is off and no voice.	A6 assembly defective.	Test A6 per para. 10.
(b)	G/S light is on.	A6 assembly defective.	Test A6 per para. 10.
(c)	No voice begins.	A6 assembly defective.	Test A6 per para. 10.
(d)	G/S light is on.	(a) A6 assembly defective.	Test A6 per para. 10.
		(b) Broken wire J1A-5 to J12-17	Repair.
(e)	G/S light is off.	(a) A6 assembly defective.	Test A6 per para. 10.
		(b) Broken wire J1B-1 to J12-19.	Repair.
(f)	G/S light is on.	(a) A6 assembly defective.	Test A6 per para. 10.
		(b) Broken wire J1A-3 to J12-15.	Repair.

TEST STEP	TROUBLE	PROBABLE CAUSE	CORRECTION
3.F.(25)	Glideslope Warning Logic (cont'd)		
(g)	G/S light is off.	A6 assembly defective.	Test A6 per para. 10.
(h)	G/S light is off for all models, except model -081. Model 081 is on.	A6 assembly defective.	Test A6 per para. 10.
(i)	G/S light is on for all models, except model -081. Model -081 is off.	(a) A6 assembly defective.	Test A6 per para. 10.
		(b) Broken wire J12-6 to J1A-19 or J12-7 to J1A-20.	Repair.
(j)	G/S light is off.	A6 assembly defective.	Test A6 per para. 10.
(k)	G/S light is on.	(a) A6 assembly defective.	Test A6 per para. 10.
		(b) A1 assembly defective.	Test A1 per para. 4.
		(c) A5 assembly defective.	Test A5 per para. 9.
		(d) Broken wire J11-25 to J3-K.	Repair.
(l)	G/S light is on.	A1 assembly defective.	Test A1 per para. 4.
(m)	G/S light is on.	A1 assembly defective.	Test A1 per para. 4.
(n)	G/S light is on.	A6 assembly defective.	Test A6 per para. 10.
(o)	G/S light is on.	A6 assembly defective.	Test A6 per para. 10.
3.F.(26)	Glideslope Voice Repetition Rate and Amplitude		
(a)	Output voltage out of tolerance.	(a) A3 assembly defective.	Test A3 per para. 6.
		(b) A4 assembly defective.	Test A4 per para. 7.

TEST STEP	TROUBLE	PROBABLE CAUSE	CORRECTION
3.F.(26)	Glideslope Voice Repetition Rate and Amplitude (cont'd)		
(b)	Repetition interval out of tolerance.	(a) A6 assembly defective.	Test A6 per para. 10.
		(b) Broken wire J8-21 to J6-3.	Repair.
(c)	Time out of tolrance.	A6 assembly defective.	Test A6 per para. 10.
(d)	Voltage out of tolerance.	(a) A6 assembly defective.	Test A6 per para. 10.
		(b) Broken wire J1A-33 to J6-9.	Repair.
(e)	Voltage out of tolerance.	(a) A4 assembly defective.	Test A4 per para. 7.
		(b) A6 assembly defective.	Test A6 per para. 10.
	G/S (5) indicator is black.	(a) A5 assembly defective.	Test A5 per para. 9.
		(b) A7M2(Q1) or A7B5 defective.	Replace.
(f)	G/S light is off for all models, except model -087 which is on.	A6 assembly defective.	Test A6 per para. 10.
(g),(h) and (i)	Voltage out of tolerance.	A6 assembly defective.	Test A6 per para. 10.
(j)	G/S light is off.	A1 assembly defective.	Test A1 per para. 4.
(k)	G/S light stays on.	A1 assembly defective.	Test A1 per para. 4.
	Time out of tolerance.	A3 assembly defective.	Test A3 per para. 6.

TEST STEP	TROUBLE	PROBABLE CAUSE	CORRECTION
3.F.(27)	High Level Glideslope Input Verification		
(a) thru (d)	Voltage out of tolerance.	(a) A6 assembly defective. (b) Broken wire J1A-22 to J12-27.	Test A6 per para. 10. Repair.
3.F.(28)	Glideslope Beam Filter Verification		
(a) thru (h)	Voltage, frequency, or time out of tolerance and/or lights in wrong state.	A6 assembly defective.	Test A6 per para. 10.
3.F.(29)	Ground Self Test Verification		
(a)	All indicators are not black.	(a) A5 assembly defective. (b) A7B1 thru A7B5 or A7S2 defective.	Test A5 per para. 9. Replace.
(b)	Steps (b)1. thru (b)5. failed.	A1 assembly defective.	Test A1 per para. 4.
(b)1.	No "glideslope" voice.	(a) A6 assembly defective. (b) Broken wire J1B-22 to J3-PP.	Test A6 per para. 10. Repair.
(b)2.	CW light is off.	A2 assembly defective.	Test A2 per para. 5.
(b)3.	AURAL light is off.	A1 assembly defective.	Test A1 per para. 4.
(b)4.	No "whoop whoop pull up" or "whoop whoop terrain".	(a) A3 assembly defective. (b) A5 assembly defective.	Test A3 per para. 6. Test A5 per para. 9.
(b)5.	Last "pull up" or "terrain" not completed.	A4 assembly defective.	Test A4 per para. 7.

TEST STEP	TROUBLE	PROBABLE CAUSE	CORRECTION
3.F.(29)	Ground Self Test Verification (cont'd)		
(c)1. and (c)2.	EVENT, GPWS VAL, and/or G/S light in wrong state.	(a) A1 assembly defective.	Test A1 per para. 4.
		(b) A6 assembly defective.	Test A6 per para. 10.
(c)3.	All indicators are not black.	A5 assembly defective.	Test A5 per para. 9.
(d)	Voltage at METER SELECT 1 out of tolerance.	A2 assembly defective.	Test A2 per para. 5.
	Voltage at METER SELECT 5 out of tolerance.	A3 assembly defective.	Test A3 per para. 6.
(e)	AURAL light is on.	A1 assembly defective.	Test A1 per para. 4.
3.F.(30)	Front Panel Ground Self Test		
(a)	All computer lights do not come on.	(a) A5 assembly defective.	Test A5 per para. 9.
		(b) Broken wire J3-VV to J11-22.	Repair.
	Some computer lights do not come on.	(a) A7M2 and/or A7M3 associated light transistors defective.	Replace.
		(b) A5 assembly defective.	Test A5 per para. 9.
(b)	All indicators are not white.	A5 assembly defective.	Test A5 per para. 9.
3.F.(31)	Front Panel System Fault Isolation (Flaps Down)		
(a)	All indicators are not black.	A7S2 defective.	Replace.
(b)1.	No "glideslope" voice.	(a) A7S1 defective.	Replace.
		(b) A5 assembly defective.	Test A5 per para. 9.
		(c) A1 assembly defective.	Test A1 per para. 4.

TEST STEP	TROUBLE	PROBABLE CAUSE	CORRECTION
3.F.(31)	Front Panel System Fault Isolation (Flaps Down) (cont'd)		
(b)2.	FLAP DN light is off.	(a) A5 assembly defective.	Test A5 per para. 9.
		(b) A7DS5 defective.	Replace.
		(c) A7M3(Q3) defective.	Replace.
(b)3.	TERRAIN (3) indicator not black.	A5 assembly defective.	Test A5 per para. 9.
(b)4.	GPWC OK light is on.	A5 assembly defective.	Test A5 per para. 9.
(c)1.	HI SINK (1) indicator is black.	A5 assembly defective.	Test A5 per para. 9.
(c)2.	TERRAIN (2) indicator is white.	(a) A1 assembly defective.	Test A1 per para. 4.
		(b) A2 assembly defective.	Test A2 per para. 5.
(c)3.	TAKE OFF (3) indicator is white.	A1 assembly defective.	Test A1 per para. 4.
(c)4.	GEAR/FLAP (4) indicator is white.	A1 assembly defective.	Test A1 per para. 4.
(c)5.	G/S (5) indicator is black.	A5 assembly defective.	Test A5 per para. 9.
3.F.(32)	Fault Isolation (Gear Up)		
(a)	All indicators are not black.	A7S2 defective.	Replace.
(b)1.	"Glideslope" voice is heard.	A1 assembly defective.	Test A1 per para. 4.
	"Whoop whoop pull up" or "whoop whoop terrain" is heard.	A1 assembly defective.	Test A1 per para. 4.
(b)2.	GEAR light is off.	A5 assembly defective.	Test A5 per para. 9.

TEST STEP	TROUBLE	PROBABLE CAUSE	CORRECTION
3.F.(32)	Fault Isolation (Gear Up) (cont'd)		
(b)3.	TERRAIN (2) indicator is black.	A5 assembly defective.	Test A5 per para. 9.
(b)4.	GPWC OK light is off.	A5 assembly defective.	Test A5 per para. 9.
(c)1.	HI SINK (1),TERRAIN (2), TAKE OFF (3) and GEAR/ FLAP (4) indicators are black.	A5 assembly defective.	Test A5 per para. 9.
(c)2.	G/S (5) indicator is white.	A1 assembly defective.	Test A1 per para. 4.
3.F.(33)	Fault Isolation (Altimeter Failure)		
(a)	All indicators are not black.	A7S2 defective.	Replace.
(b)1.	RADIO ALT light is off.	A5 assembly defective.	Test A5 per para. 9.
(b)2.	TERRAIN (2) indicator is black.	A5 assembly defective.	Test A5 per para. 9.
(b)3.	GPWC OK light is on.	A5 assembly defective.	Test A5 per para. 9.
(b)4.	Voice is heard.	A1 assembly defective.	Test A1 per para. 4.
(c)2.	G/S (5) indicator is white.	A1 assembly defective.	Test A1 per para. 4.
3.F.(34)	Fault Isolation (Baro Rate Failure)		
(a)	All indicators are not black.	A7S2 defective.	Replace.
(b)1.	AIR DATA light is off.	A5 assembly defective.	Test A5 per para. 9.
(b)2.	TERRAIN (2) indicator is black.	A5 assembly defective.	Test A5 per para. 9.
(b)3.	GPWC OK light is on.	A1 assembly defective.	Test A1 per para. 4.

TEST STEP	TROUBLE	PROBABLE CAUSE	CORRECTION
3.F.(34)	Fault Isolation (Baro Rate Failure) (cont'd)		
(c)1.	HI SINK (1) and TAKE OFF (3) indicators are white.	A1 assembly defective.	Test A1 per para. 4.
(c)2.	TERRAIN (2),GEAR/FLAP (4) AND G/S (5) indicators are black.	A5 assembly defective.	Test A5 per para. 9.
3.F.(35)	Fault Isolation (GPWC Failure)		
(a)	All indicators are not black.	A7S2 defective.	Replace.
(b)	GPWC OK light is on.	A5 assembly defective.	Test A5 per para. 9.
(c)1.	HI SINK (1),TAKE OFF (3) GEAR/FLAP (4) and G/S (5) indicators are black.	A5 assembly defective.	Test A5 per para. 9.
(c)2.	TERRAIN (2) indicator is white.	A2 assembly defective.	Test A2 per para. 5.
3.F.(36)	Fault Isolation (Glideslope Signal Wiring Failure)		
(a)	GSS light is on and G/S VAL light is off on all models, except models 070,087, which GSS light is off and G/S VAL light is on.	(a) A6 assembly defective. (b) Broken wire J12-4 to J11-8,J11-9 to J3-T.	Test A6 per para. 10.
(c)	G/S VAL light is off on all models, except models 070,087, which is on.	A6 assembly defective.	Test A6 per para. 10.
(d)	G/S VAL light is off on all models, except models 070,087; which is on.	A6 assembly defective.	Test A6 per para. 10.

TEST STEP	TROUBLE	PROBABLE CAUSE	CORRECTION
3.F.(36)	Fault Isolation (Glideslope Signal Wiring Failure) (cont'd)		
(e)	All indicators are black.	A7S2 defective.	Replace.
(f)	G/S (5) indicator is white, TERRAIN (2) indicator is black or GPWC OK light is off.	A6 assembly defective.	Test A6 per para. 10.
3.F.(37)	Internal Computer Power Monitor Verification		
(a) and (b)	GPWS VAL light is off and time out of tolerance.	(a) A1 assembly defective. (b) Broken wire J2-33 to J3-Y, J2-34 to J3-P.	Test A1 per para. 4. Repair.
3.F.(38)	Radio Altimeter Wiring Verification		
(a)	HI SINK (1) indicator is black.	A5 assembly defective.	Test A5 per para. 9.
(b)	All indicators not black.	A5 assembly defective.	Test A5 per para. 9.
(c)	GPWS VAL light is on.	A5 assembly defective.	Test A5 per para. 9.
(d)	GPWS VAL light is off.	A5 assembly defective.	Test A5 per para. 9.
(e)	GPWS VAL light is on.	A5 assembly defective.	Test A5 per para. 9.
	Time out of tolerance.	A1 assembly defective.	Test A1 per para. 4.
(f)	GSS light is on.	A1 assembly defective.	Test A1 per para. 4.
3.F.(39)	Auxiliary AC Baro Rate Input		
(a)	Voltage out of tolerance.	(a) A3 assembly defective. (b) Broken wire J1B-35 to J6-26, J1B-36 to J6-23.	Test A3 per para. 6. Repair.

TEST STEP	TROUBLE	PROBABLE CAUSE	CORRECTION
3.F.(39)	Auxiliary AC Baro Rate Input (cont'd)		
(b)	AURAL light is off.	(a) A3 assembly defective. (b) Broken wire J1B-36 to J6-26, J1B-36 to J6-23.	Test A3 per para. 6. Repair.
3.F.(40)	Primary Power Monitor Verification		
(a)	Voltage out of tolerance.	A5 assembly defective.	Test A5 per para. 9.
3.F.(41)	Audio Output Verification		
(a)	Voltage out of tolerance.	(a) A3 assembly defective. (b) A4 assembly defective.	Test A3 per para. 6. Test A4 per para. 7.
(b)	Voltage out of tolerance.	A4 assembly defective.	Test A4 per para. 7.
(c)	Time out of tolerance.	(a) A4 assembly defective. (b) A4R24 and A4R26 out of calibration	Test A4 per para. 7. Calibrate per para. 7.E.
(d)	Time out of tolerance.	(a) A4 assembly defective. (b) A4R26 and A4R46 out of calibration.	Test A4 per para. 7. Calibrate per para. 7.E.
(e)	Voltage out of tolerance.	A3 assembly defective.	Test A3 per para. 6.
(f)	Voltage out of tolerance.	(a) A3 assembly defective. (b) A3R43 out of calibration.	Test A3 per para. 6. Calibrate per para. 7.E.

TEST STEP	TROUBLE	PROBABLE CAUSE	CORRECTION
3.F.(41)	Audio Output Verification (cont'd)		
(g) and (h)	Voltage out of tolerance.	A3 assembly defective.	Test A3 per para. 6.
(i)	Voltage out of tolerance.	(a) A4 assembly defective.	Test A4 per para. 7.
		(b) A4R62 out of calibration.	Calibrate per para. 7.E.
3.F.(42)	Flashing Output Lamp Verification		
(a) and (b)	Time out of tolerance.	A1 assembly defective.	Test A1 per para. 4.
(c)	For model 073 only - AURAL light is off.	(a) A4 assembly defective.	Test A4 per para. 7.
		(b) Broken wire J6-11 to J8-28.	Repair.
3.F.(43)	Self Test Inhibit Verification		
(c)	CW light is off.	(a) A2 assembly defective.	Test A2 per para. 5.
		(b) A5 assembly defective.	Test A5 per para. 9.
		(c) A1 assembly defective.	Test A1 per para. 4.
	AURAL light comes on for all models, except model 087 which is off.	A1 assembly defective.	Test A1 per para. 4.
(d)	For all models, except model 087 there is no delay before audio warning. For model 087 there is no audio warning.	A1 assembly defective.	Test A1 per para. 4.
(e)	For model 070, DVM indicates greater than 3.0 ohms.	Broken wire J1A-38 to K2-1.	Repair.

TEST STEP	TROUBLE	PROBABLE CAUSE	CORRECTION
3.F.(45)	For Model 073 Only, Synchro Demodulator Tests		
(a)	Voltage out of tolerance.	See below.	
	Perform test steps 3.F.(45)(j) and (k) and proceed as noted below.		
	Voltage within tolerance in steps (j) and (k).	A4A2 assembly defective.	Test A4A2 per para. 8.
	Voltage out of tolerance in steps (j) and (k).	(a) A4A2 assembly defective.	Test A4A2 per para. 8.
		(b) Broken wire J1A-9 to J8-22, J1A-8 to J8-23, J1A-10 to J8-24, J2-51 to J8-27 and/or wires A4A2E22 and A4A2E23.	Repair.
(b)	Voltage out of tolerance.	See below.	
	Perform test steps 3.F.(45)(j) and (k) and proceed as noted below.		
	Voltage out of tolerance in steps (j) and (k).	A4A2 assembly defective.	Test A4A2 per para. 8.
	Voltage within tolerance steps (j) and (k).	A4A2 assembly defective.	Test A4A2 per para. 8.
	Voltage in step (b) is wrong polarity.	A4A2 assembly defective.	Test A4A2 per para. 8.
	Voltage in step (b) is low.	(a) A4A2R85 out of calibration.	Calibrate per para. 8.F.
		(b) A4A2 assembly defective.	Test A4A2 per para. 8.
		(c) Wire broken A4A2E27.	Replace.
	Voltage in step (b) is high.	(a) A4A2 out of calibration.	Calibrate per para. 8.F.
		(b) A4A2 assembly defective.	Test A4A2 per para. 8.

TEST STEP	TROUBLE	PROBABLE CAUSE	CORRECTION
3.F.(45)	For Model 073 Only, Synchro Demodulator Tests (cont'd)		
(c) thru (j)	Voltage out of tolerance.	A4A2 assembly defective.	Test A4A2 per para. 8.
(k)	Voltage is wrong polarity.	A4A2 assembly defective.	Test A4A2 per para. 8.
	Voltage is low.	(a) A4A2 out of calibration.	Calibrate per para. 8.F.
		(b) A4A2R84 assembly defective.	Test A4A2 per para. 8.
		(c) Broken wire A4A2E25.	Repair.
(l) thru (aa)	Voltage out of tolerance.	A4A2 assembly defective.	Test A4A2 per para. 8.
(ab)	Discontinuities occur.	A4A2 assembly defective.	Test A4A2 per para. 8.
(ac) and (ad)	Time out of tolerance.	A4A2 assembly defective.	Test A4A2 per para. 8.

REVISION CODE	REVISION DESCRIPTION	SERIAL NO. EFFECTIVITY

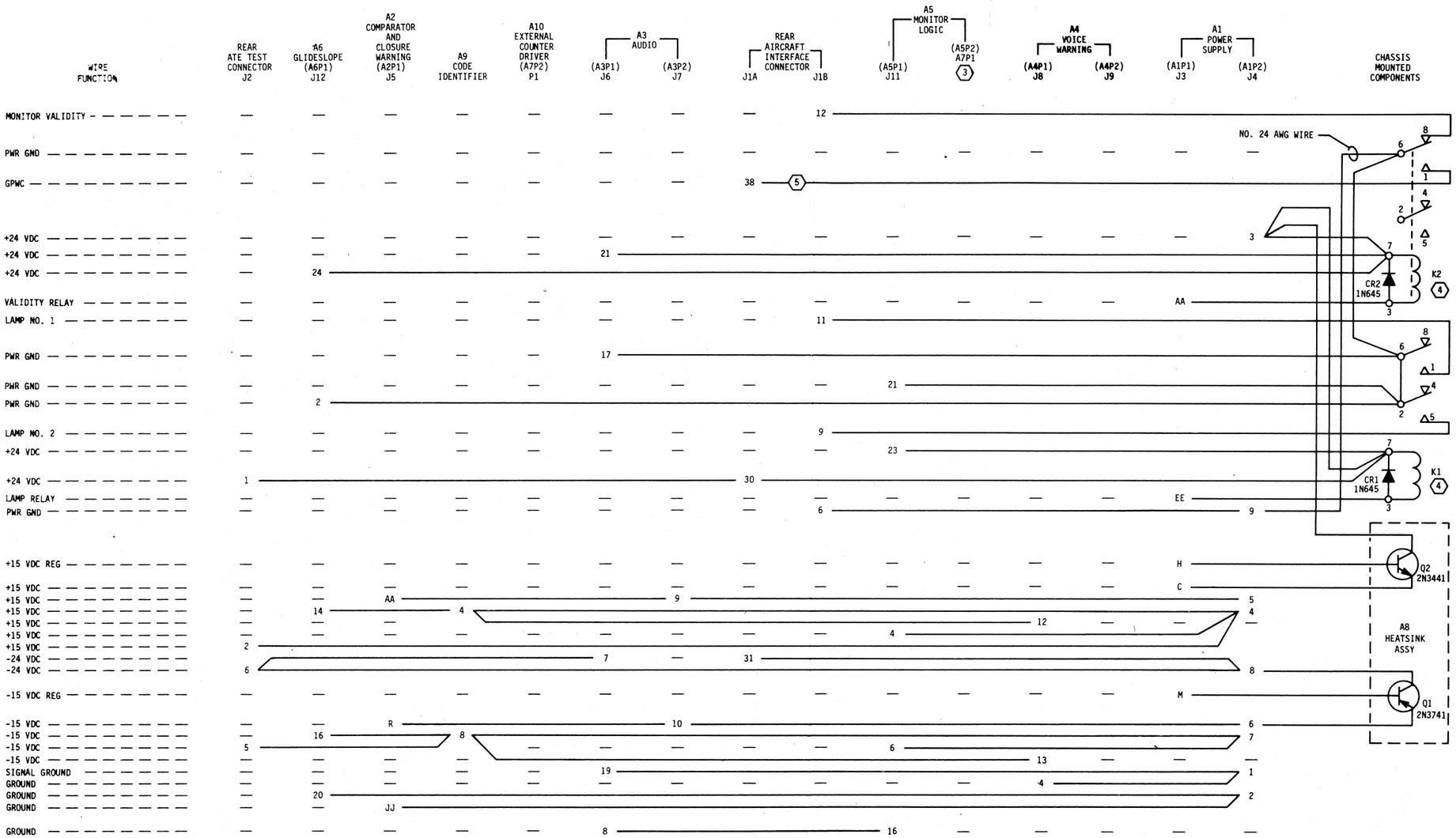

NOTES:

1. NUMBERS IN ⬡ APPLY TO SPECIFIC NOTES.
2. WIRES SHALL BE NO. 26 AWG UNLESS OTHERWISE NOTED.
3. SEE FIGURE 120 FOR SCHEMATIC DIAGRAM.
4. BOTTOM VIEW OF RELAY K1 AND K2.

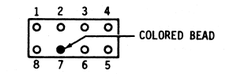

5. WIRE FROM J1A-38 TO k2-1 APPLICABLE TO PART NO. 965-0376-070 ONLY.
6. WIRE FROM J1A-26 TO J1A-27 APPLICABLE TO PART NO. 965-0376-087 ONLY.
7. WIRE FROM J1B-1 TO J1B-26 APPLICABLE TO PART NO. 965-0376-081 ONLY.
8. WIRE FROM J1B-22 to J1B-34 APPLICABLE TO PART NOS. 965-0376-081 AND -87 ONLY.
9. WIRE FROM A9-5 TO A9-15, FROM J1A-22 TO A9-5 AND FROM J1A-23 TO A9-5 APPLICABLE TO PART NO. 965-0376-081 ONLY.
10. WIRE FROM J1A-12 TO J1B-27 APPLICABLE TO PART NO. 965-0376-073 ONLY.
11. WIRE FROM J1A-7 TO J1B-37 APPLICABLE TO PART NO. 965-0376-070, -081 AND -087 ONLY.
12. THESE WIRES APPLICABLE TO PART NOS. 965-0376-070, -071, -073, -081 AND -087 ONLY.
13. THESE WIRES APPLICABLE TO PART NOS. 965-0376-072 AND -079 ONLY.
14. WIRE FROM J3-W TO J1B-10 APPLICABLE TO PART NOS. 965-0376-070,-071,-072,-073, -079 and -081 ONLY.
15. Wire from J3-W TO J7-14 APPLICABLE TO PART NO. 965-0376-087 ONLY.

Ground Proximity Warning Computer
Schematic / Wiring Diagram
Figure 112 (Sheet 2 of 5)

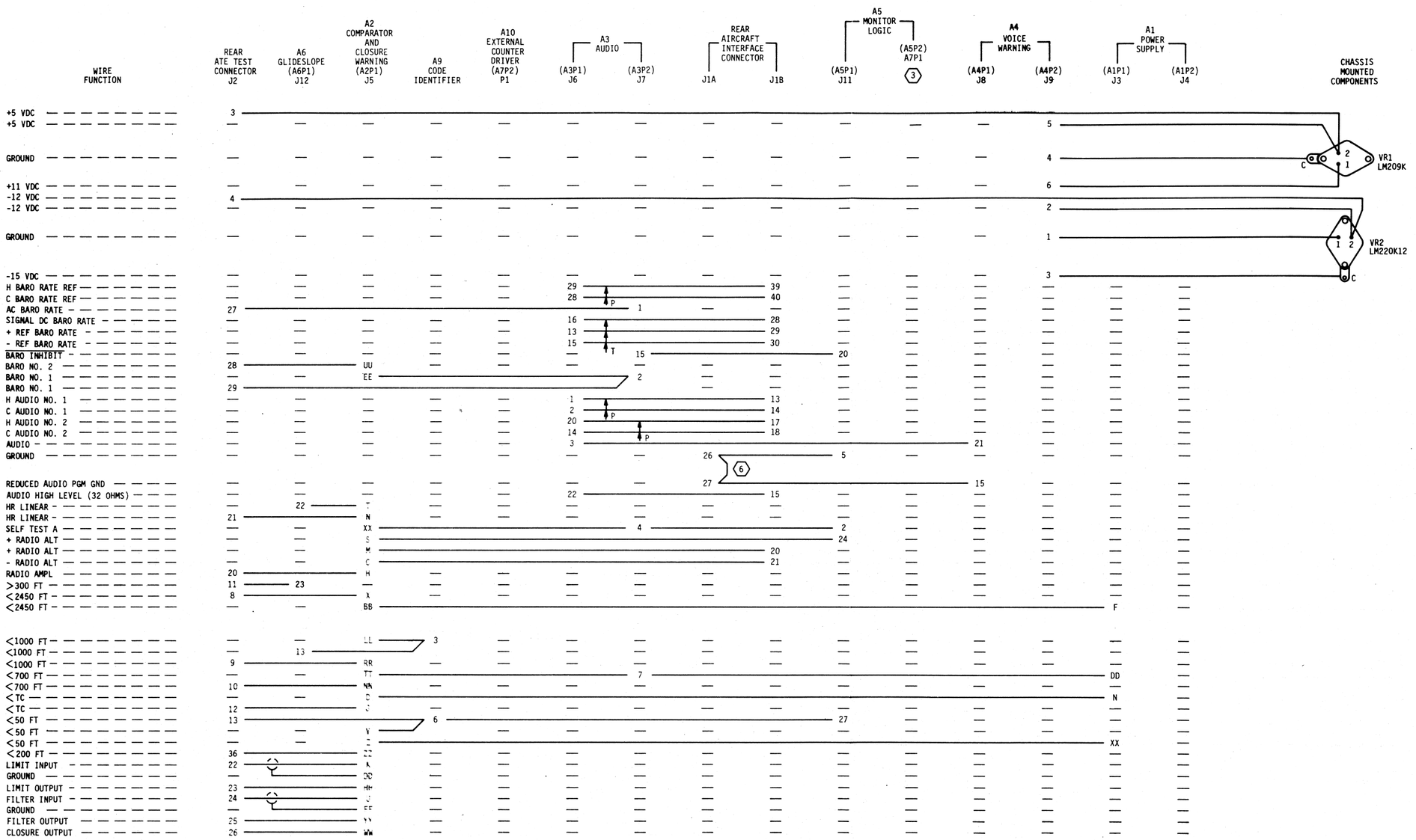

Ground Proximity Warning Computer
Schematic / Wiring Diagram
Figure 112 (Sheet 3 of 5)

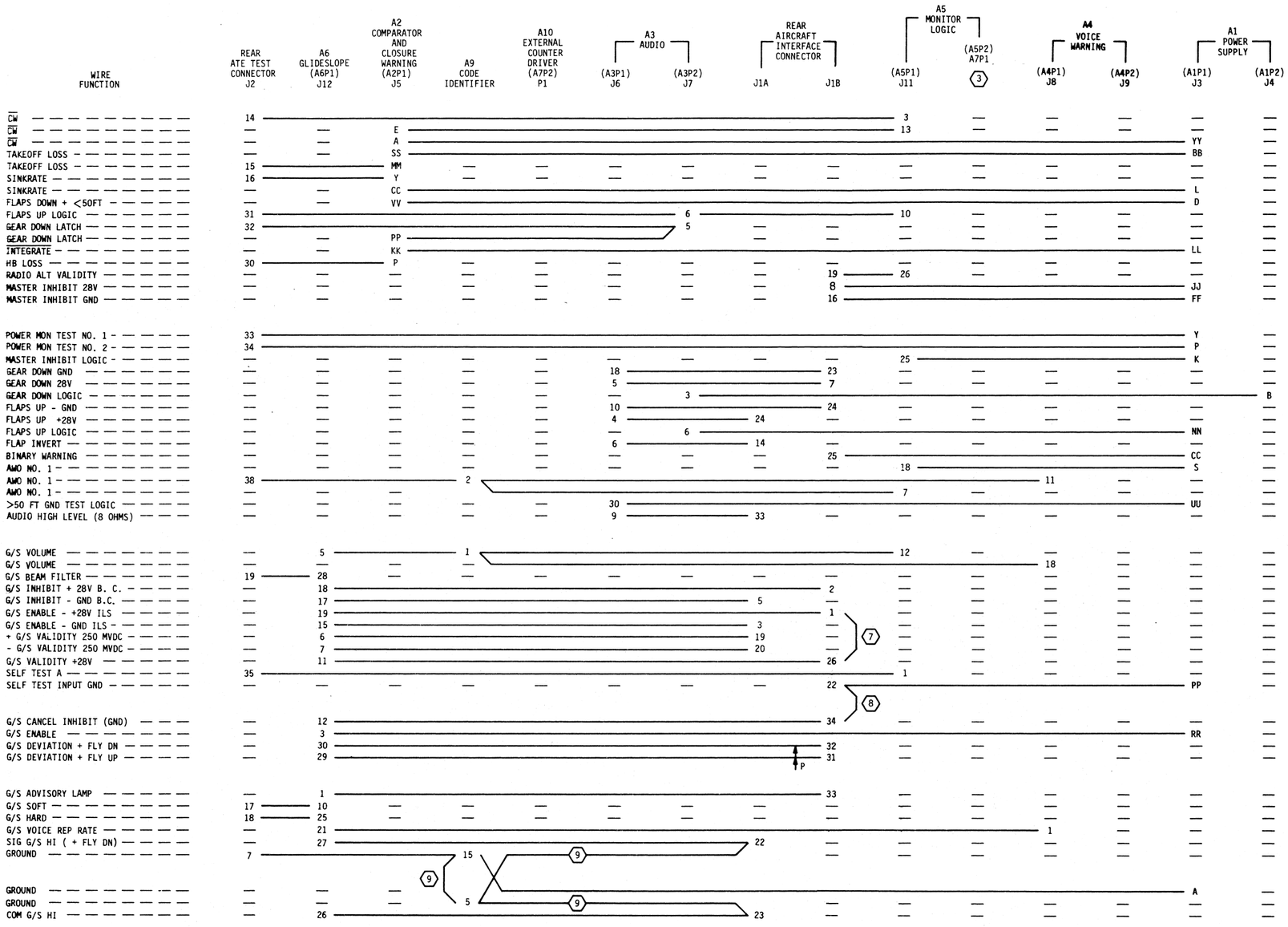

Ground Proximity Warning Computer
Schematic / Wiring Diagram
Figure 112 (Sheet 4 of 5)

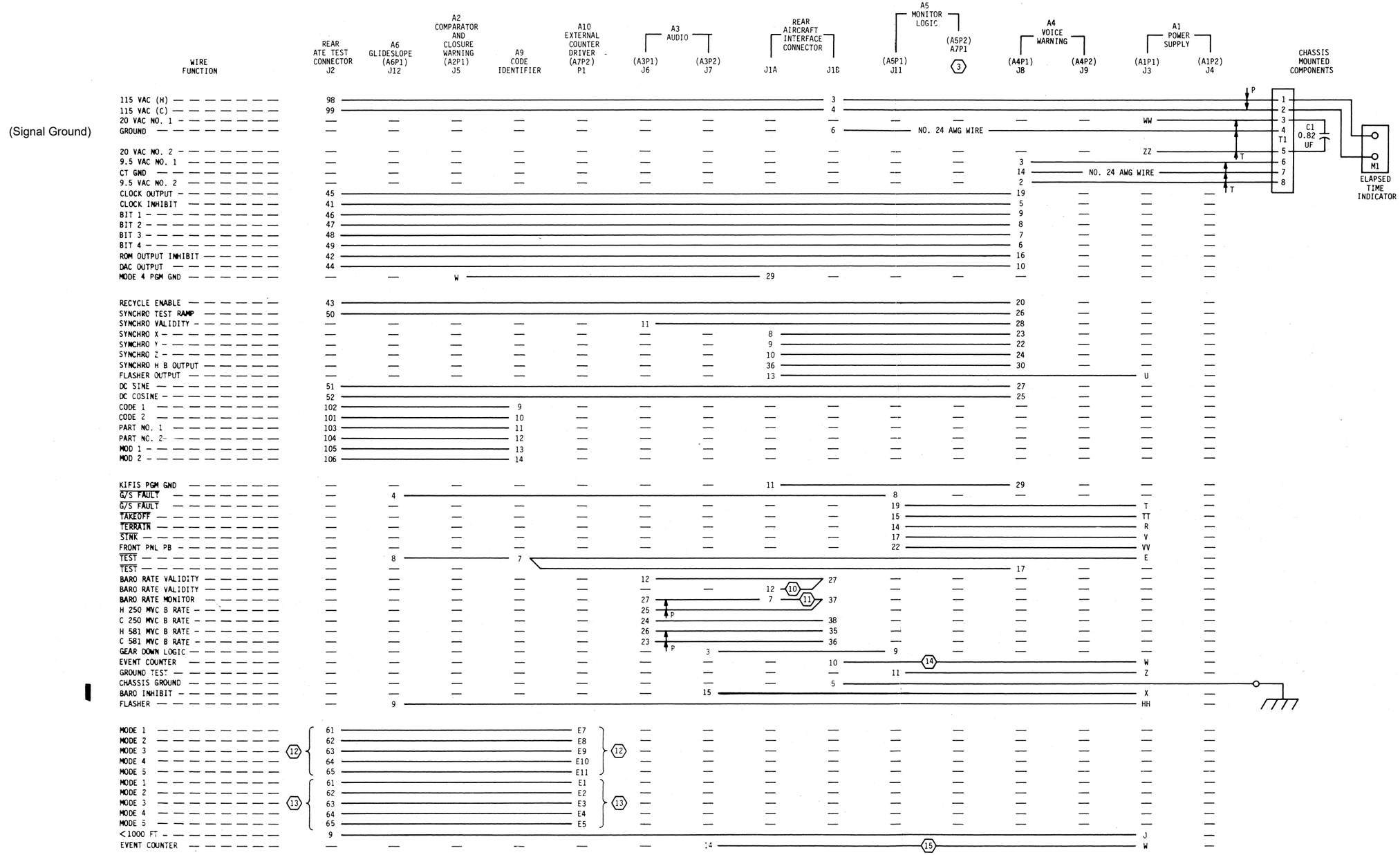

Ground Proximity Warning Computer
Schematic / Wiring Diagram
Figure 112 (Sheet 5 of 5)

REVISION CODE	REVISION DESCRIPTION	SERIAL NO. EFFECTIVITY

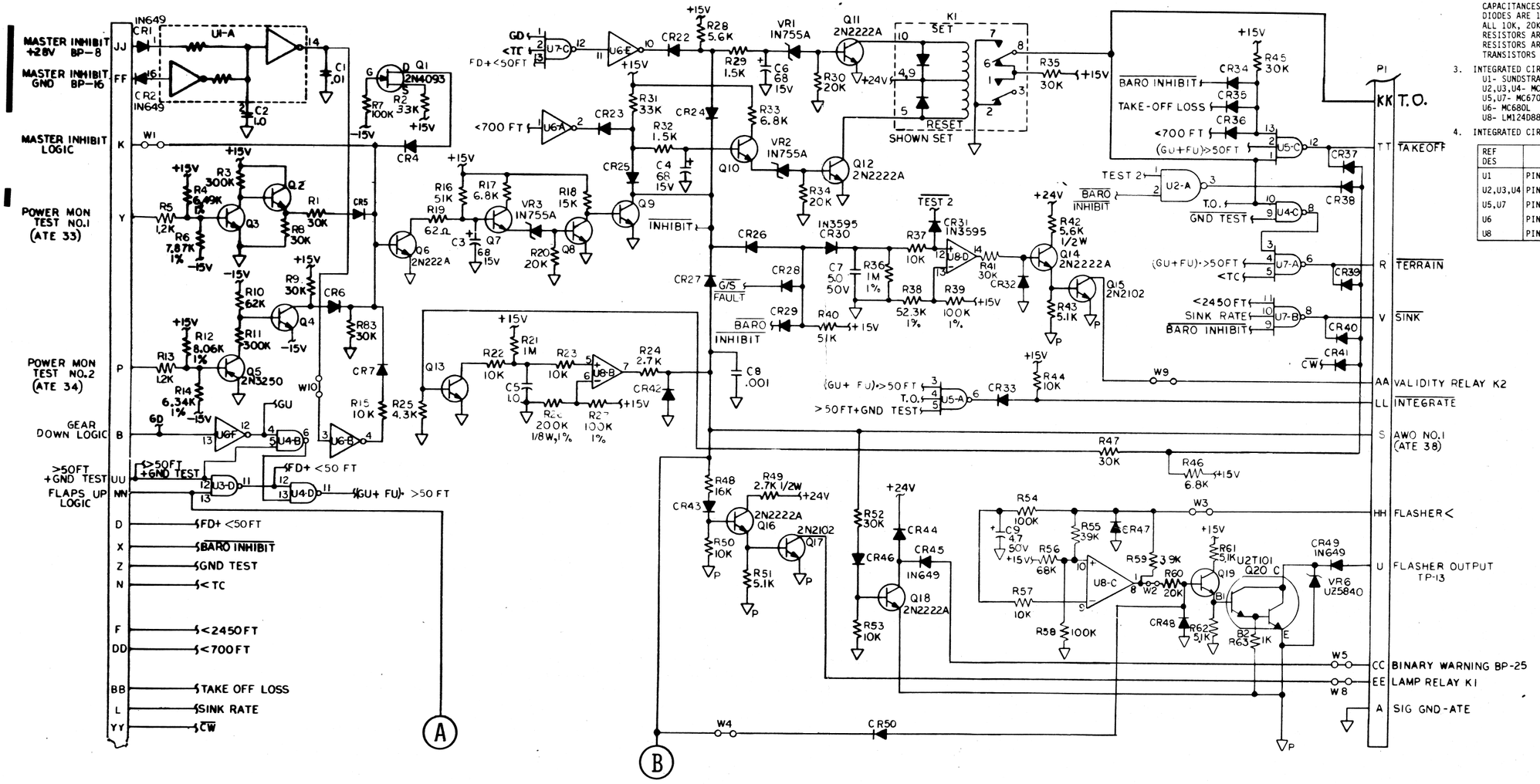

NOTES:

1. REFERENCE DESIGNATORS ARE ABBREVIATED. PREFIX THE DESIGNATOR WITH ASSEMBLY OR SUBASSEMBLY OR BOTH.
2. UNLESS OTHERWISE NOTED:
   RESISTANCES ARE IN OHMS.
   CAPACITANCES ARE IN MICROFARADS.
   DIODES ARE 1N4448.
   ALL 10K, 20K, 51K, AND 100K RESISTORS ARE 5%, 1/8w; ALL OTHER RESISTORS ARE 5%, 1/4w.
   TRANSISTORS ARE 2N2484.
3. INTEGRATED CIRCUIT PART NOS. ARE:
   U1- SUNDSTRAND DATA CONTROL 316-5106-001.
   U2,U3,U4- MC668L
   U5,U7- MC670L.
   U6- MC680L
   U8- LM124D883B.
4. INTEGRATED CIRCUITS POWER CONNECTIONS:

REF DES		+15	-15	GND
U1	PIN	15	13	12
U2,U3,U4	PIN	14	-	7
U5,U7	PIN	14	-	7
U6	PIN	14	-	7
U8	PIN	4	11	-

Part No. 722-1799-004
Power Supply (A1)
Schematic Diagram
Figure 113 (Sheet 2 of 5)

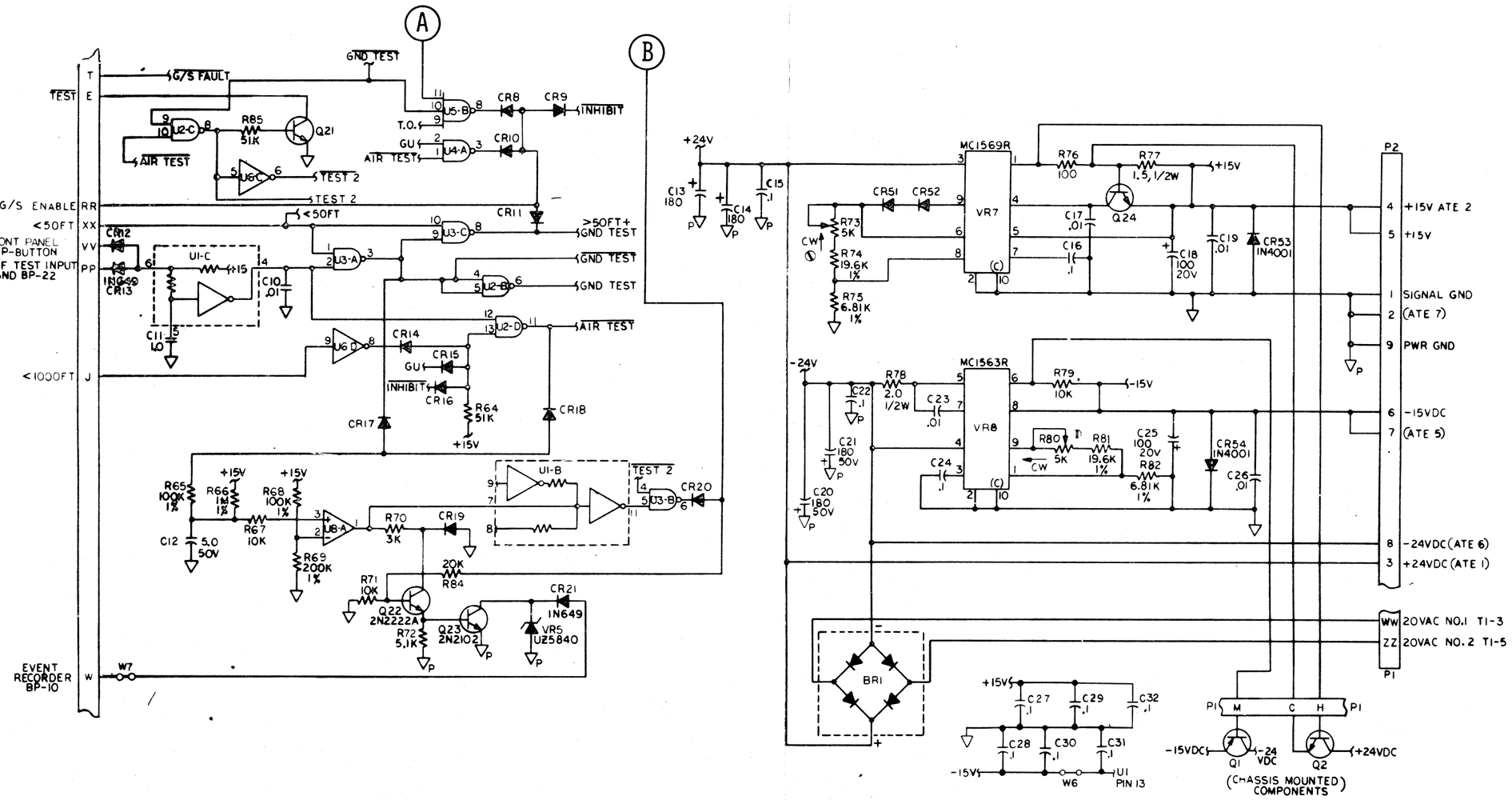

Part No. 722-1799-004
Power Supply (A1)
Schematic Diagram
Figure 113 (Sheet 3 of 5)

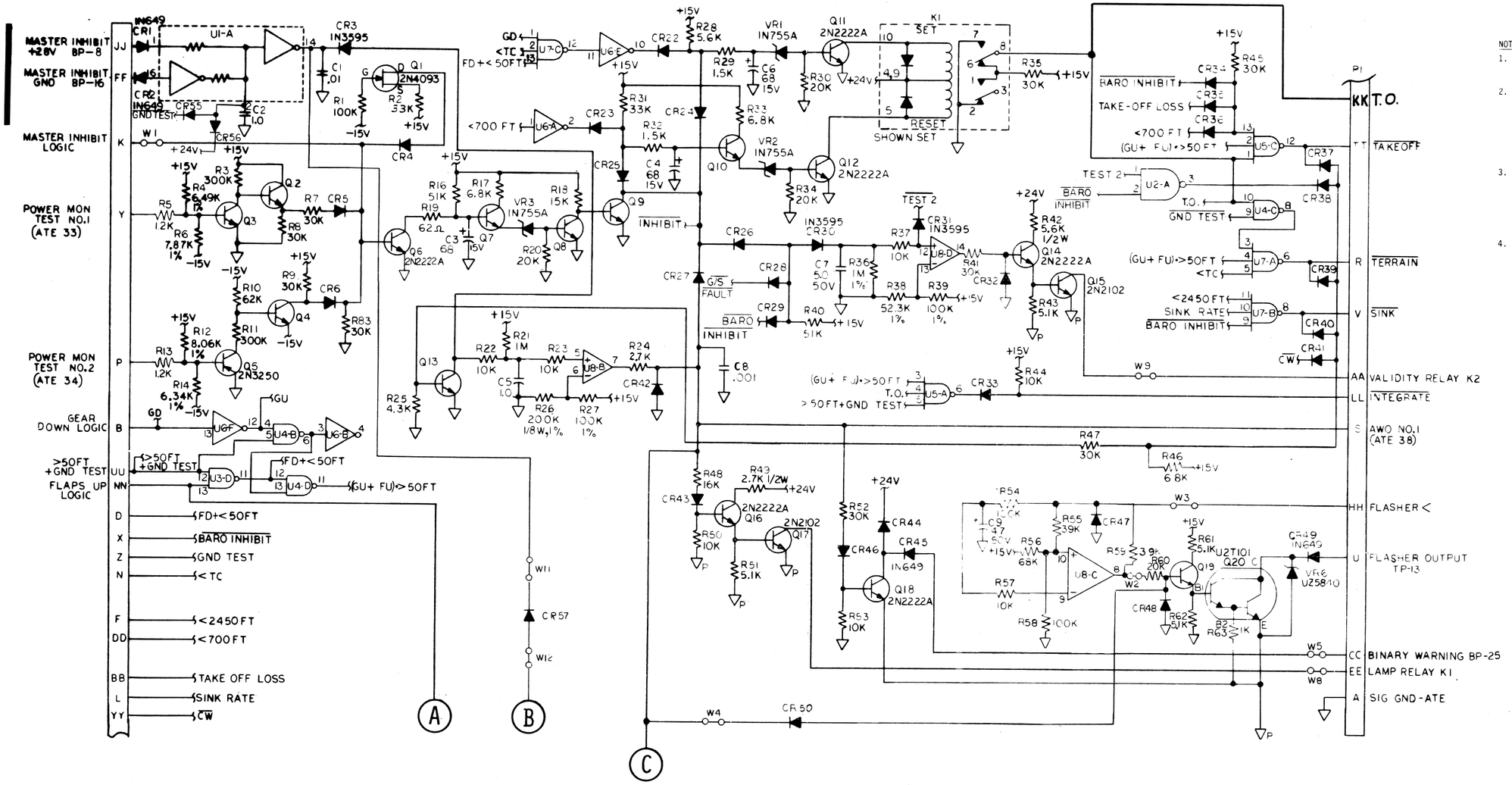

NOTES:

1. REFERENCE DESIGNATORS ARE ABBREVIATED. PREFIX THE DESIGNATOR WITH ASSEMBLY OR SUBASSEMBLY OR BOTH.
2. UNLESS OTHERWISE NOTED:
   RESISTANCES ARE IN OHMS.
   CAPACITANCES ARE IN MICROFARADS.
   DIODES ARE 1N4448.
   ALL 10K, 20K, 51K, AND 100K RESISTORS ARE 5%, 1/8W; ALL OTHER RESISTORS ARE 5%, 1/4W.
   TRANSISTORS ARE 2N2484.
3. INTEGRATED CIRCUIT PART NOS. ARE:
   U2- SUNDSTRAND DATA CONTROL 316-5106-001.
   U2, U3, U4- MC668L
   U5, U7- MC670L.
   U6- MC680L.
   U8- LM124D883B.
4. INTEGRATED CIRCUITS POWER CONNECTIONS.

REF DES		+15	-15	GND
U1	PIN	15	13	12
U2,U3, U4	PIN	14	-	7
U5,U7	PIN	14	-	7
U6	PIN	14	-	7
U8	PIN	4	11	-

Part No. 722-1799-005
Power Supply (A1)
Schematic Diagram
Figure 113 (Sheet 4 of 5)

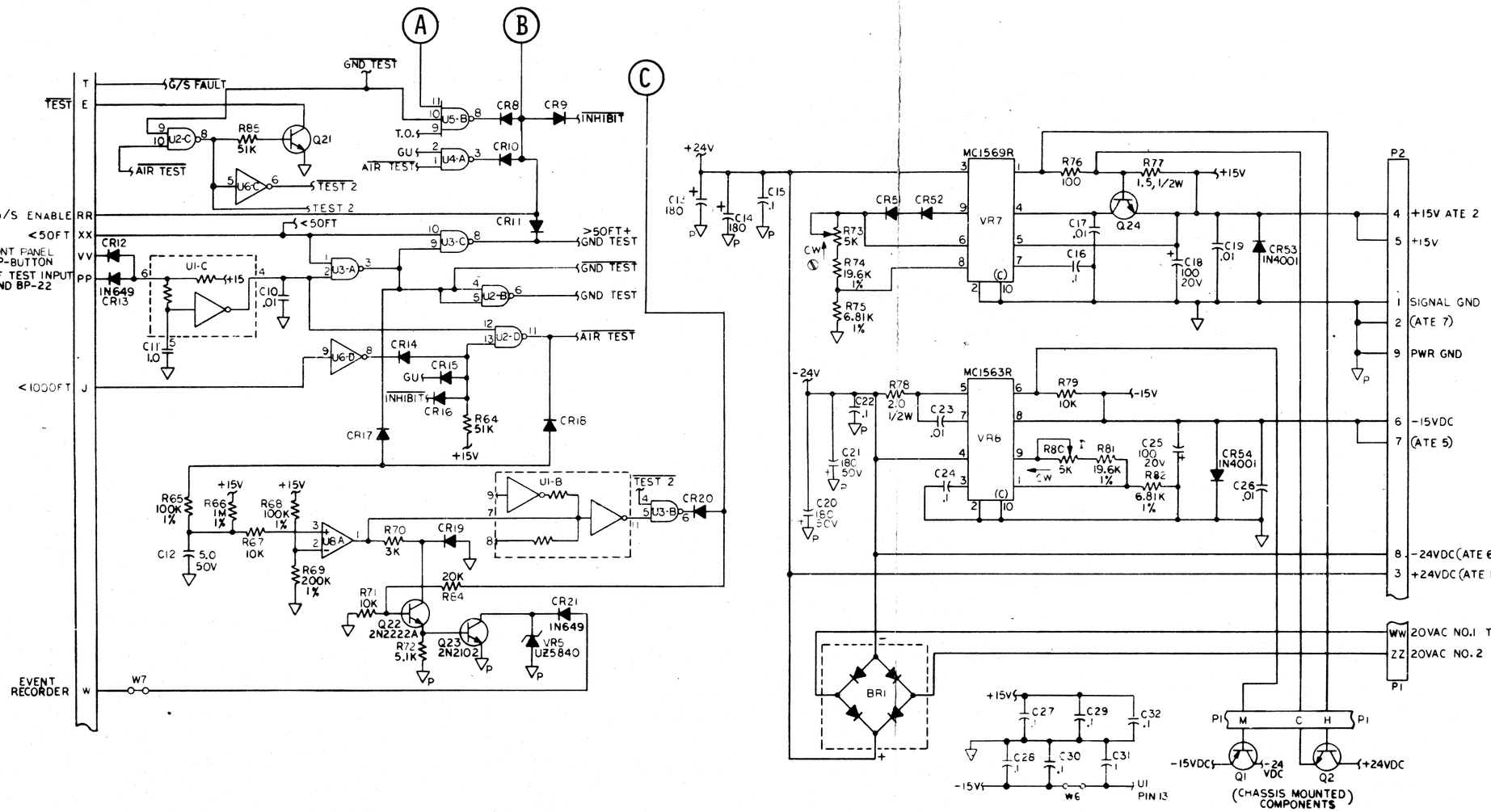

Part No. 722-1799-005
Power Supply (A1)
Schematic Diagram
Figure 113 (Sheet 5 of 5)

REVISION CODE	REVISION DESCRIPTION	SERIAL NO. EFFECTIVITY
1	Added Note 5 on sheet 2. Part No. 722-1757-004 was 722-1757-001 (SB 6)	Models 070,071 072,073,079, 081.
	Added CR33 (SB 6)	All models
	Added Note 6 on sheet 7. Part No. 722-1757-005 was 722-1757-003 (SB 6) R120 was 14.3K, R122 was 137K, R162 was 13K.	Model 087

NOTES:

1. REFERENCE DESIGNATORS ARE ABBREVIATED. PREFIX THE DESIGNATOR WITH ASSEMBLY OR SUBASSEMBLY OR BOTH.
2. UNLESS OTHERWISE NOTED:
   RESISTANCES ARE IN OHMS.
   CAPACITANCES ARE IN MICROFARADS.
   DIODES ARE 1N914B.
3. INTEGRATED CIRCUIT PART NOS. ARE:
   U1 THRU U6- LM124D883B.
   U7- LH2101AD883B.
   AR1 thru AR3- LM108H883B.
4. INTEGRATED CIRCUITS POWER CONNECTIONS:

REF DES		+15V	-15V	GND
U1 THRU U6	PIN	4	11	-
U7	PIN	19	6	-
AR1,AR2, AR3	PIN	7	4	-

5. **THESE COMPONENTS NOT INSTALLED ON THIS CONFIGURATION.**

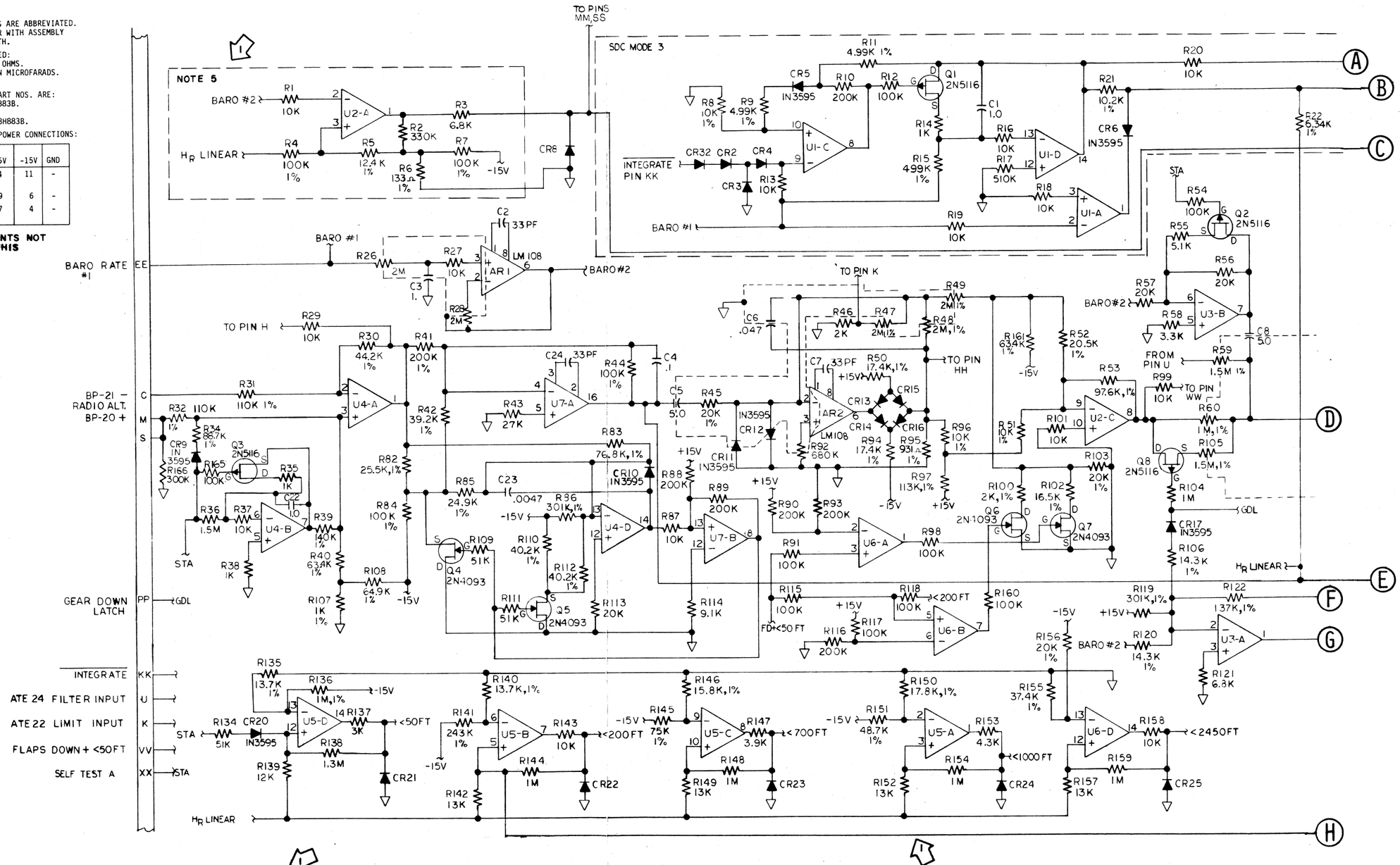

Part No. 722-1757-004
Comparator and Closure Warning (A2)
Schematic Diagram
Figure 114 (Sheet 2 of 5)

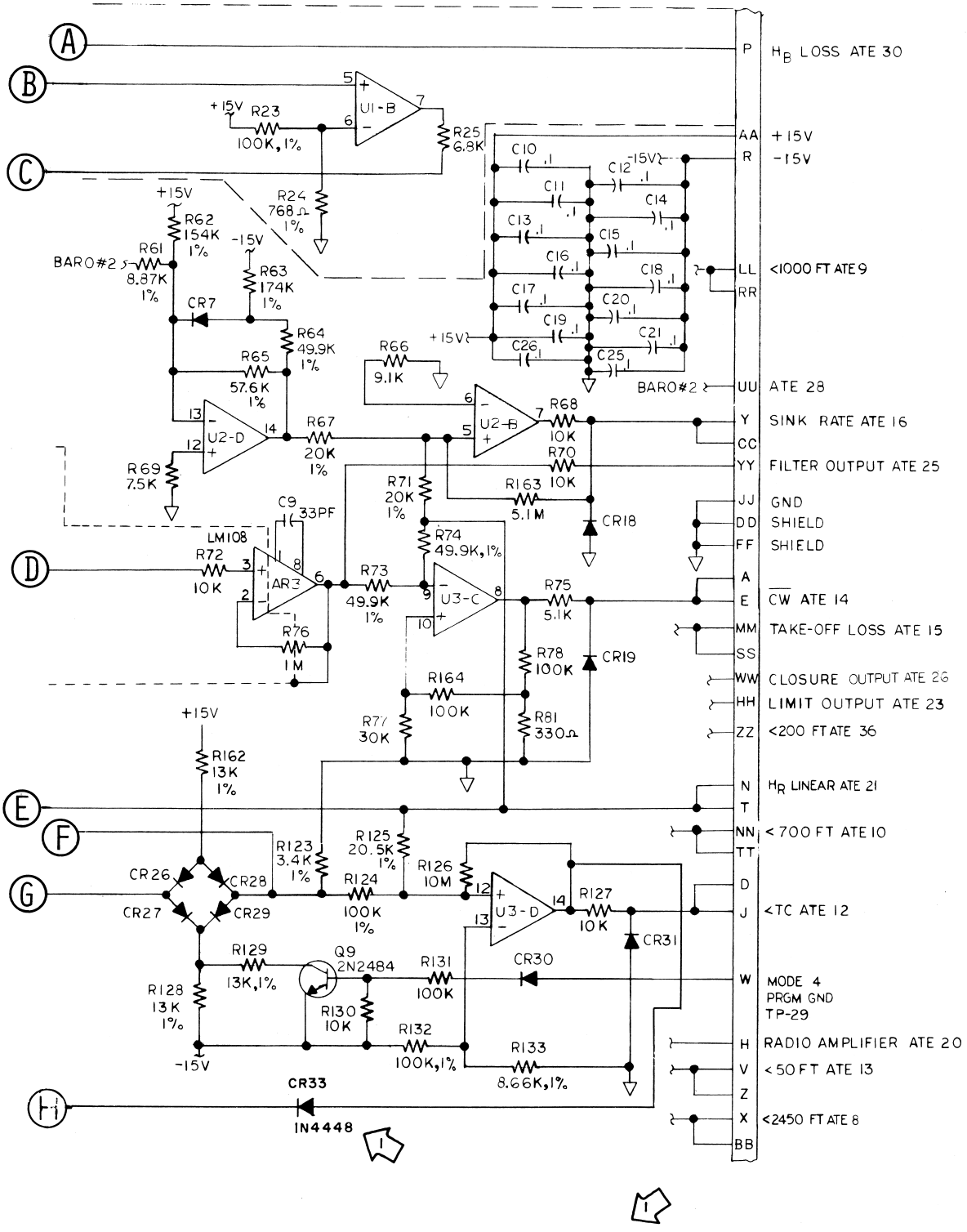

Part No. 722-1757-004
Comparator and Closure Warning (A2)
Schematic Diagram
Figure 114 (Sheet 3 of 5)

NOTES:

1. REFERENCE DESIGNATORS ARE ABBREVIATED. PREFIX THE DESIGNATOR WITH ASSEMBLY OR SUBASSEMBLY OR BOTH.
2. UNLESS OTHERWISE NOTED:
   RESISTANCES ARE IN OHMS.
   CAPACITANCES ARE MICROFARADS.
   DIODES ARE 1N914B.
3. INTEGRATED CIRCUIT PART NOS. ARE:
   U1 THRU U6- LM124D883B.
   U7- LH2101AD883B.
   AR1 THRU AR3- LM108H883B.
4. INTEGRATED CIRCUITS POWER CONNECTIONS:

REF DES		+15V	-15V	GND
U1 thru U6	PIN	4	11	-
U7	PIN	19	6	-
AR1, AR2, AR3	PIN	7	4	-

5. SELECTED VALUE, NOMINAL VALUE SHOWN.
6. THESE COMPONENTS NOT INSTALLED ON THIS CONFIGURATION.

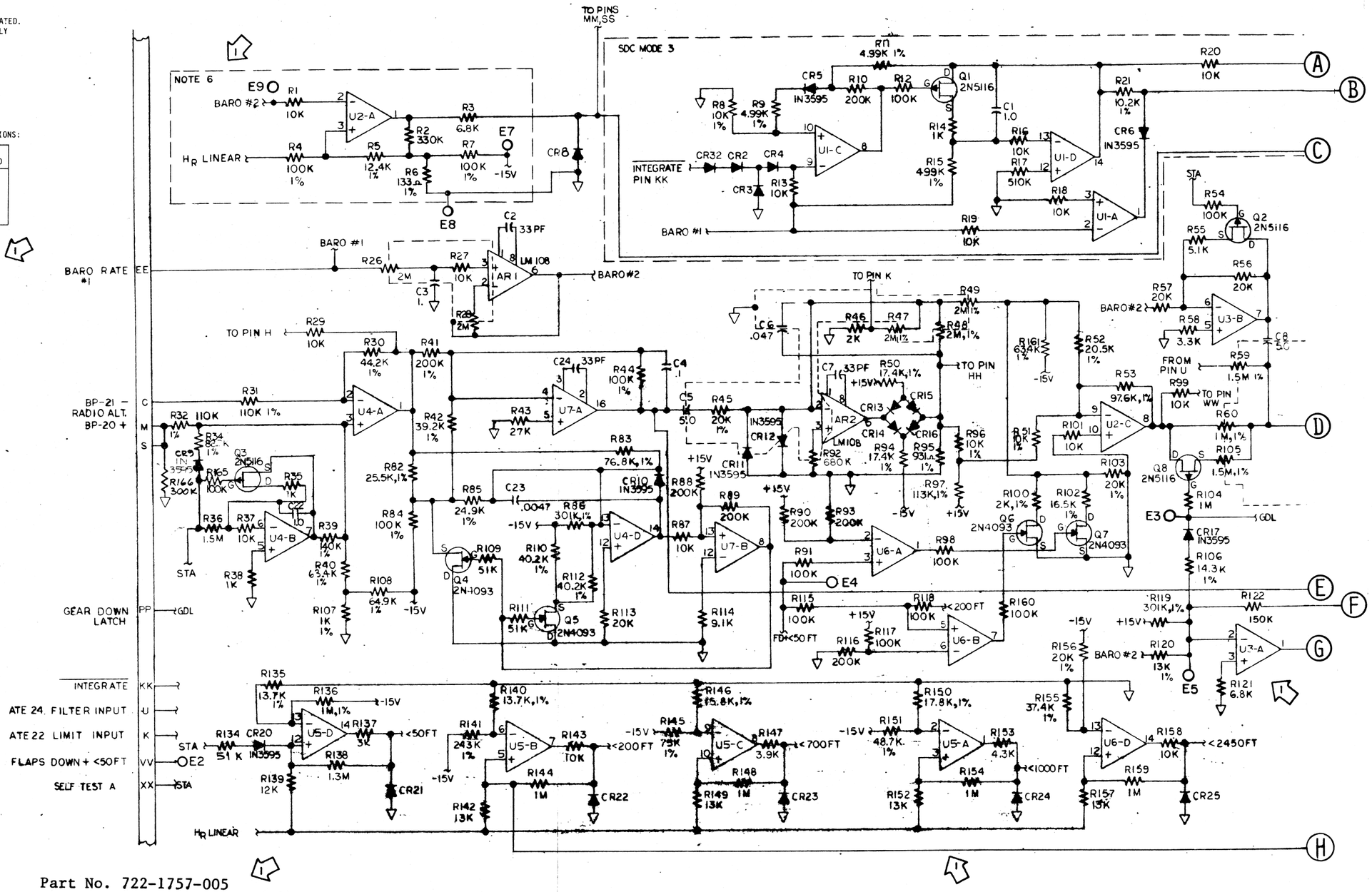

Part No. 722-1757-005
Comparator and Closure Warning (A2)
Schematic Diagram
Figure 114 (Sheet 4 of 5)

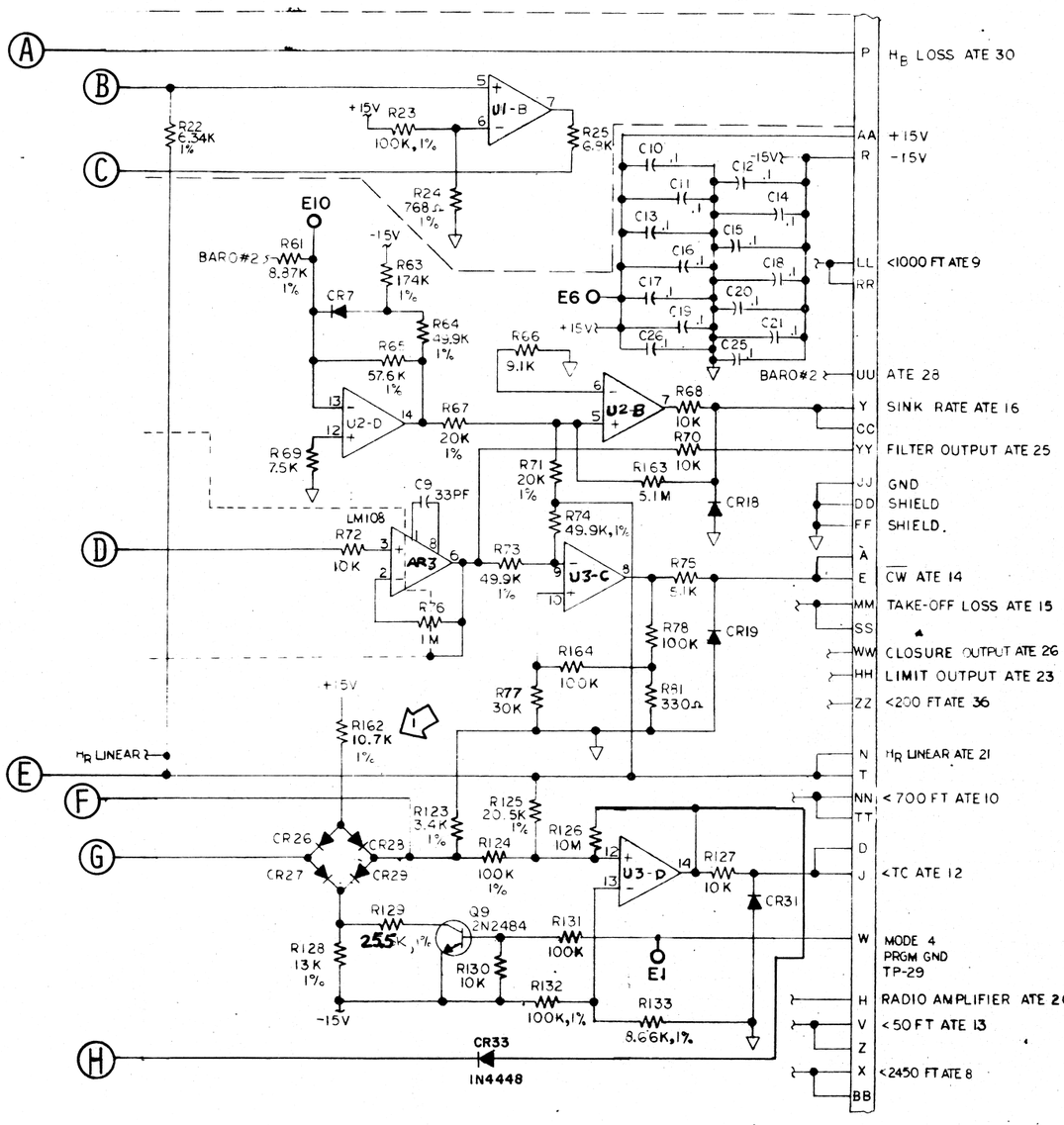

Part No. 722-1757-005
Comparator and Closure Warning (A2)
Schematic Diagram
Figure 114 (Sheet 5 of 5)

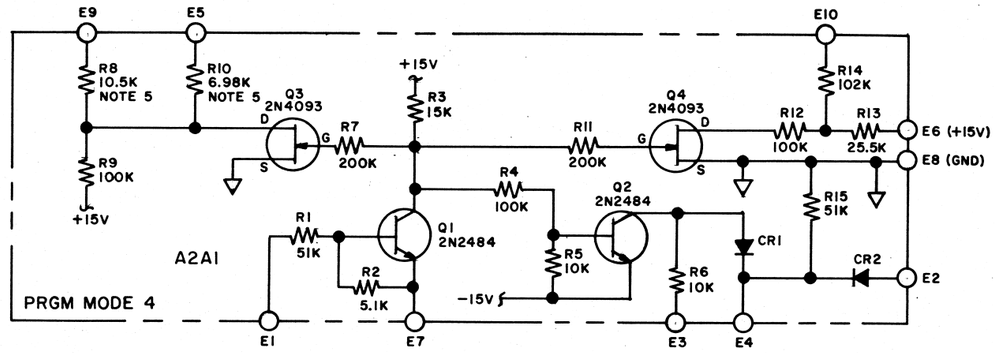

REVISION CODE	REVISION DESCRIPTION	SERIAL NO. EFFECTIVITY
1	R49 and R71 were 20K.	All models

Audio (A3)
Schematic Diagram
Figure 115 (Sheet 1 of 3)

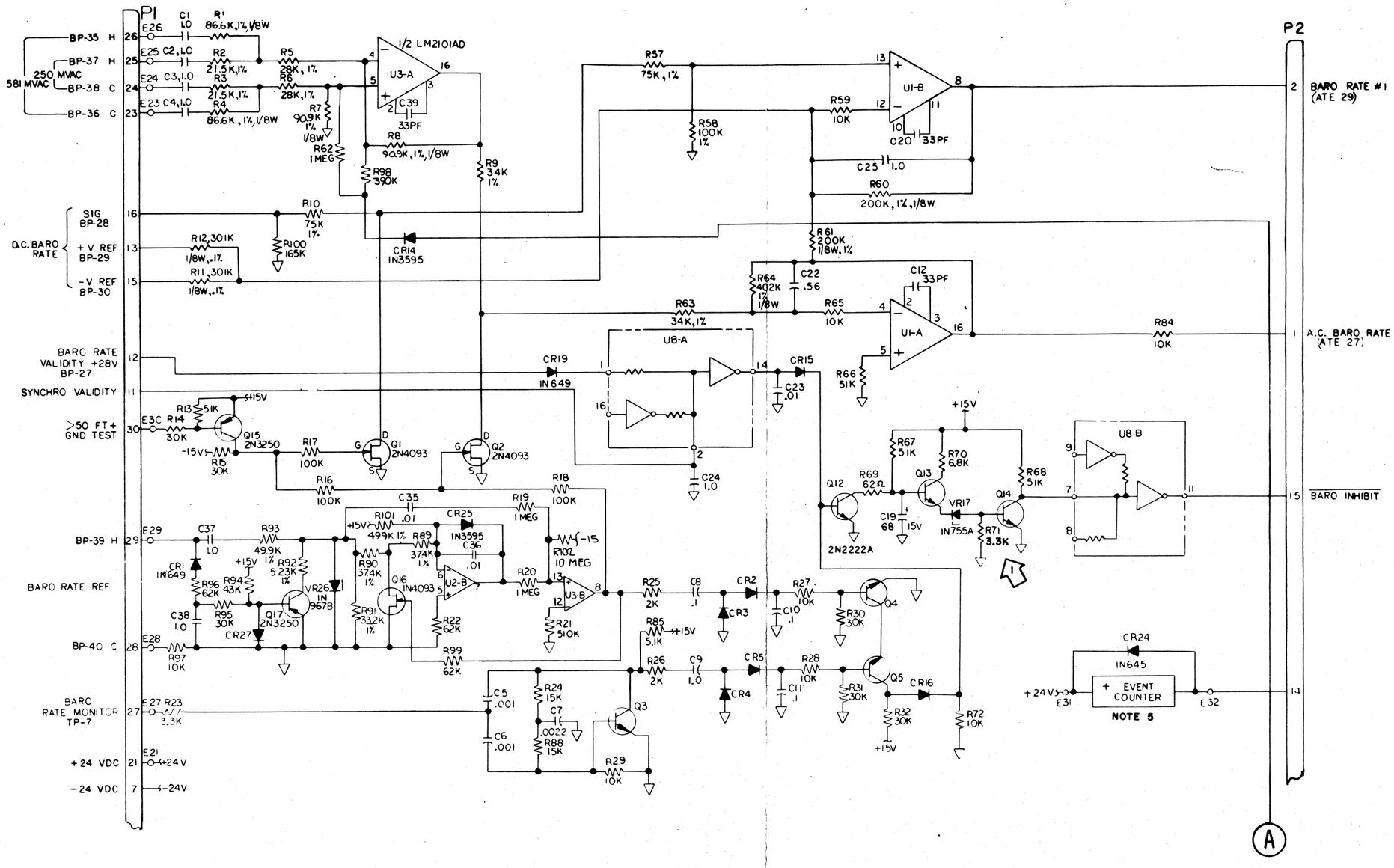

NOTES:

1. REFERENCE DESIGNATORS ARE ABBREVIATED. PREFIX THE DESIGNATOR WITH ASSEMBLY OR SUBASSEMBLY OR BOTH.
2. UNLESS OTHER WISE NOTED:
   RESISTANCES ARE IN OHMS.
   CAPACITANCES ARE IN MICROFARADS.
   DIODES ARE 1N4448.
   ALL 10K, 20K, 30K, 51K AND 100K RESISTORS ARE 5%, 1/8W; ALL OTHER RESISTORS ARE 5%, 1/4W.
   TRANSISTORS ARE 2N2484.
3. INTEGRATED CIRCUIT PART NOS. ARE:
   U2- LM124D883B
   U1,U3- LM2101AD883B
   U4- MC668L
   U7,U8- 316-5106-001
4. INTEGRATED CIRCUITS POWER CONNECTORS:

REF DES		+15V	-15V	GND
U2	PIN	4	11	-
U1,U3	PIN	1,9	6	-
U4	PIN	14	-	7
U7,U8	PIN	15	13	2

5. APPLICABLE TO PART NO. 722-1798-004 ONLY.

Audio (A3)
Schematic Diagram
Figure 115 (Sheet 2 of 3)

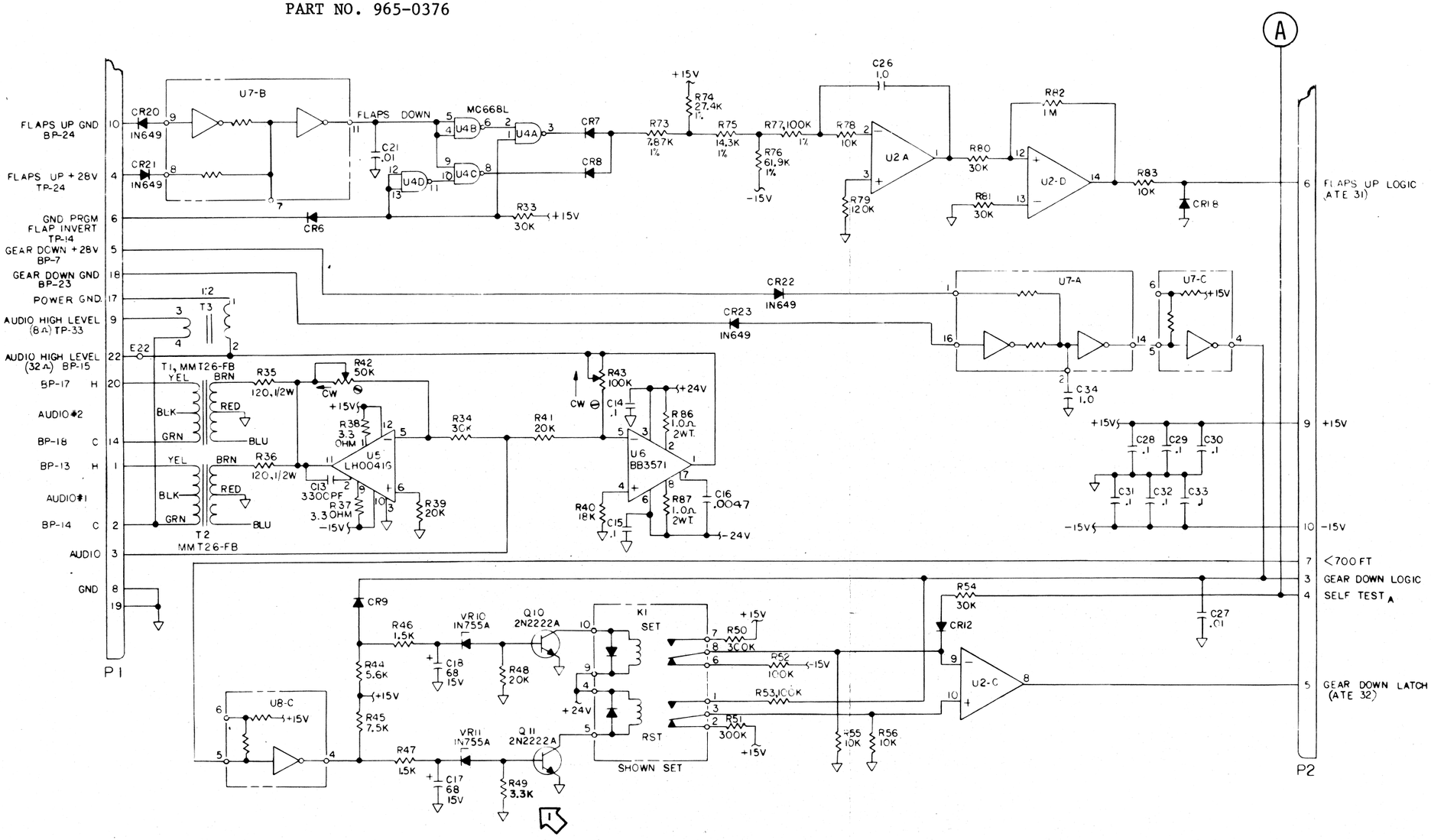

Audio (A3)
Schematic Diagram
Figure 115 (Sheet 3 of 3)

REVISION CODE	REVISION DESCRIPTION	SERIAL NO. EFFECTIVITY
1	Deleted CR5 between junction at R67 and R9 and ground (SB8)	
	CR15 was R8, R17 was 220 ohms, R9 was 6.98K, R67 was 2.4K and Q1 was 2N3250 (SB 8)	All models
	Part No. 722-1763-008 was 722-1763-005 (SB 8)	Models 070,071, 072,087,081
	Part No. 722-1763-007 was 722-1763-004 (SB 8)	Model 073
	Part No. 722-1763-009 was 722-1763-006 (SB 8)	Model 079

Voice Warning (A4)
Schematic Diagram
Figure 116 (Sheet 1 of 6)

NOTES:

1. REFERENCE DESIGNATORS ARE ABBREVIATED. PREFIX THE DESIGNATOR WITH ASSEMBLY OR SUBASSEMBLY OR BOTH.
2. UNLESS OTHERWISE NOTED:
   RESISTANCES ARE IN OHMS.
   CAPACITANCES ARE IN MICROFARADS.
   DIODES ARE 1N4448.
   ALL 10K, 20K, 51K AND 100K RESISTORS ARE 5%, 1/8W; ALL OTHER RESISTORS ARE 5%, 1/4W.
3. INTEGRATED CIRCUIT PART NOS. ARE:

U1- SN54L04J	U12- HA2400
U2- SN54L96J	U13- MN301H
U3- SN54LS32J	U14- SN54L20J
U4- SN54LS08J	U15- SN54L00J
U5- SN54L78J	U16,U17,-SN54L93J
U6- SN54LS112J	U18
U7- SN54L122J	U19- 300-0241-003
U8- SE555CT	U20- 300-0241-002
U9- SN5407J	U21- 300-0241-001
U10,U11- SN54L03J	OR 300-0241-004

4. INTEGRATED CIRCUITS POWER CONNECTIONS:

REF DES		+15V	+5V	GND	-12V	-15V
U1	PIN	-	14	7	-	-
U2	PIN	-	5	12	-	-
U3	PIN	-	14	7	-	-
U4	PIN	-	14	7	-	-
U5	PIN	-	4	11	-	-
U6	PIN	-	16	8	-	-
U7	PIN	-	5,14	1,2,7	-	-
U8	PIN	-	4,8	1	-	-
U9	PIN	-	14	7	-	-
U10,U11	PIN	-	14	7	-	-
U12	PIN	11	14	13	-	9
U13	PIN	10	11	7	-	8
U14	PIN	-	14	7	-	-
U15	PIN	-	14	7	-	-
U16,U17 U18	PIN	-	4	11	-	-
U19,U20, U21	PIN	-	1	24	15 NOTE 5	-

5. U19,U20,U21 PIN 15 IS COMMON TO W5.

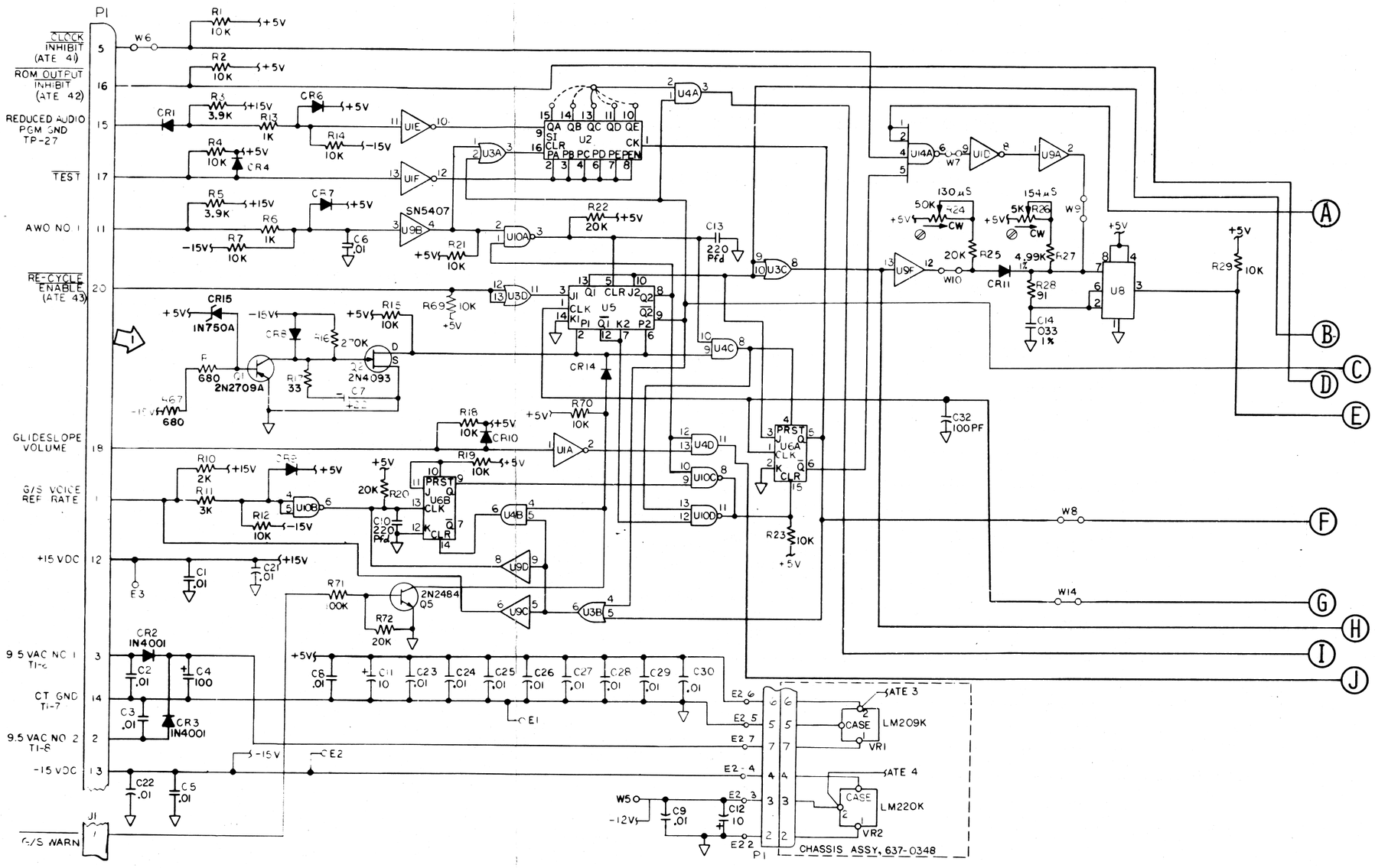

Part No. 722-1763-007 and -009
Voice Warning (A4)
Schematic Diagram
Figure 116 (Sheet 2 of 6)

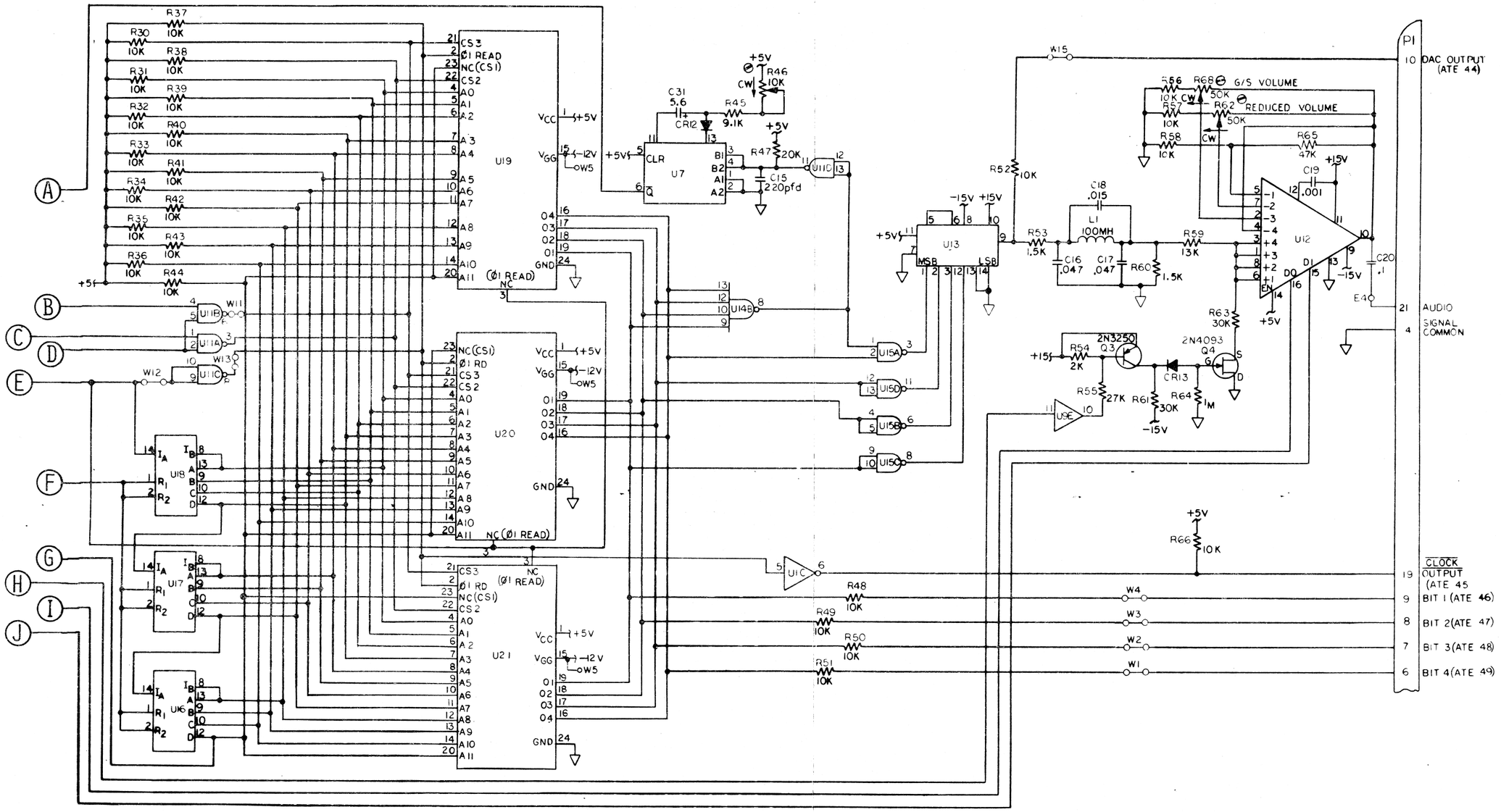

Part No. 722-1763-007 and -009
Voice Warning (A4)
Schematic Diagram
Figure 116 (Sheet 3 of 6)

NOTES:

1. REFERENCE DESIGNATORA ARE ABBREVIATED. PREFIX THE DESIGNATOR WITH ASSEMBLY OR SUBASSEMBLY OR BOTH.
2. UNLESS OTHERWISE NOTED:
   RESISTANCES ARE IN OHMS.
   CAPACITANCES ARE IN MICROFARADS.
   DIODES ARE 1N4448.
   ALL 10K, 20K, 51K, AND 100K RESISTORS ARE 5%, 1/8W; ALL OTHER RESISTORS ARE 5%, 1/4W.
3. INTEGRATED CIRCUIT PART NOS. ARE:
   U1- SN54L04J U12- HA2400
   U2- SN54L96J U13- MN3011H
   U3- SN54LS32J U14- SN54L20J
   U4- SN54LS08J U15- SN54L00J
   U5- SN54L78J U16,U17,U18,- SN54L93J
   U6- SN54LS112J U19- 300-0241-003
   U7- SN54L122J U20- 300-0241-002
   U8- SE555CT A1U1- 300-0216-001
   U9- SN5407J A1U2- 300-0216-002
   U10,U11- SN54L03J
4. INTEGRATED CIRCUITS POWER CONNECTIONS:

REF DES		+15V	+5V	GND	-12V	-15V
U1	PIN	-	14	7	-	-
U2	PIN	-	5	12	-	-
U3	PIN	-	14	7	-	-
U4	PIN	-	14	7	-	-
U5	PIN	-	4	11	-	-
U6	PIN	-	16	8	-	-
U7	PIN	-	5,14	1,2,7	-	-
U8	PIN	-	4,8	1	-	-
U9	PIN	-	14	7	-	-
U10,U11	PIN	-	14	7	-	-
U12	PIN	11	14	13	-	9
U13	PIN	10	11	7	-	8
U14	PIN	-	14	7	-	-
U15	PIN	-	14	7	-	-
U16,U17,U18	PIN	-	4	11	-	-
U19,U20	PIN	-	1	24	15 NOTE 5	-
A1U1,A1U2	PIN	-	1	24	15	-

5. U19,U20 PIN 15 IS COMMON TO W5.

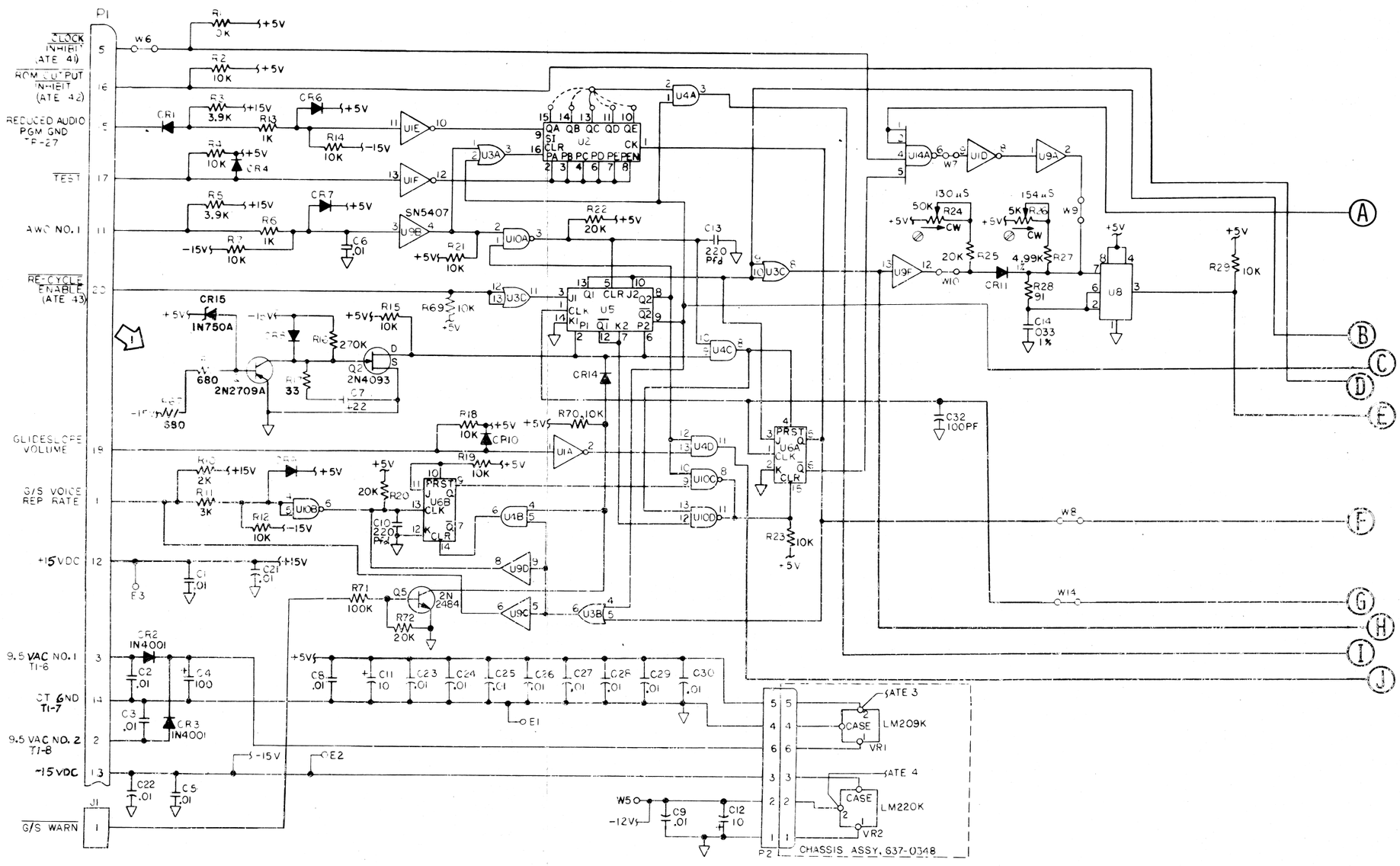

Part No. 722-1763-008
Voice Warning (A4)
Schematic Diagram
Figure 116 (Sheet 4 of 6)

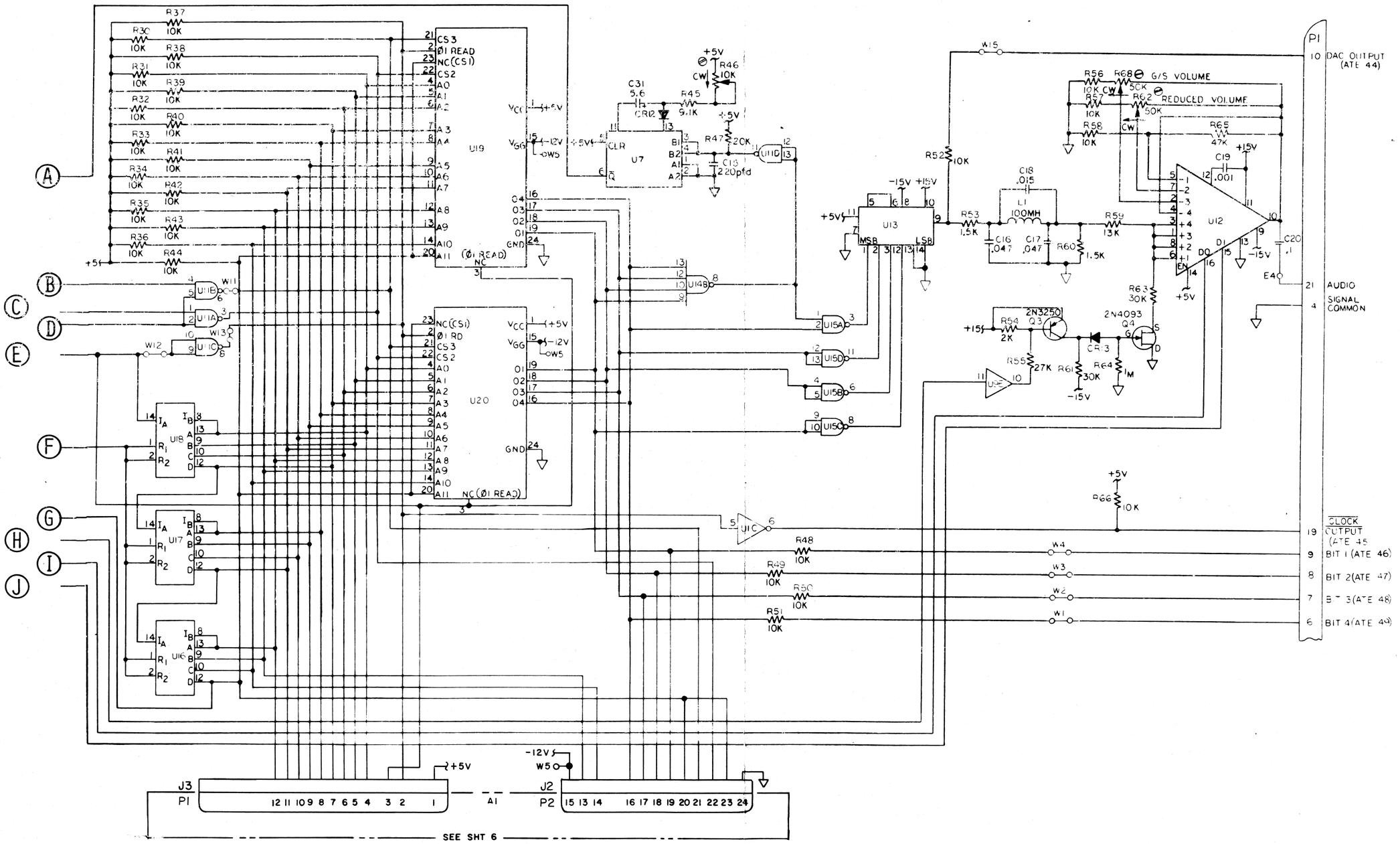

Part No. 722-1763-008
Voice Warning (A4)
Schematic Diagram
Figure 116 (Sheet 5 of 6)

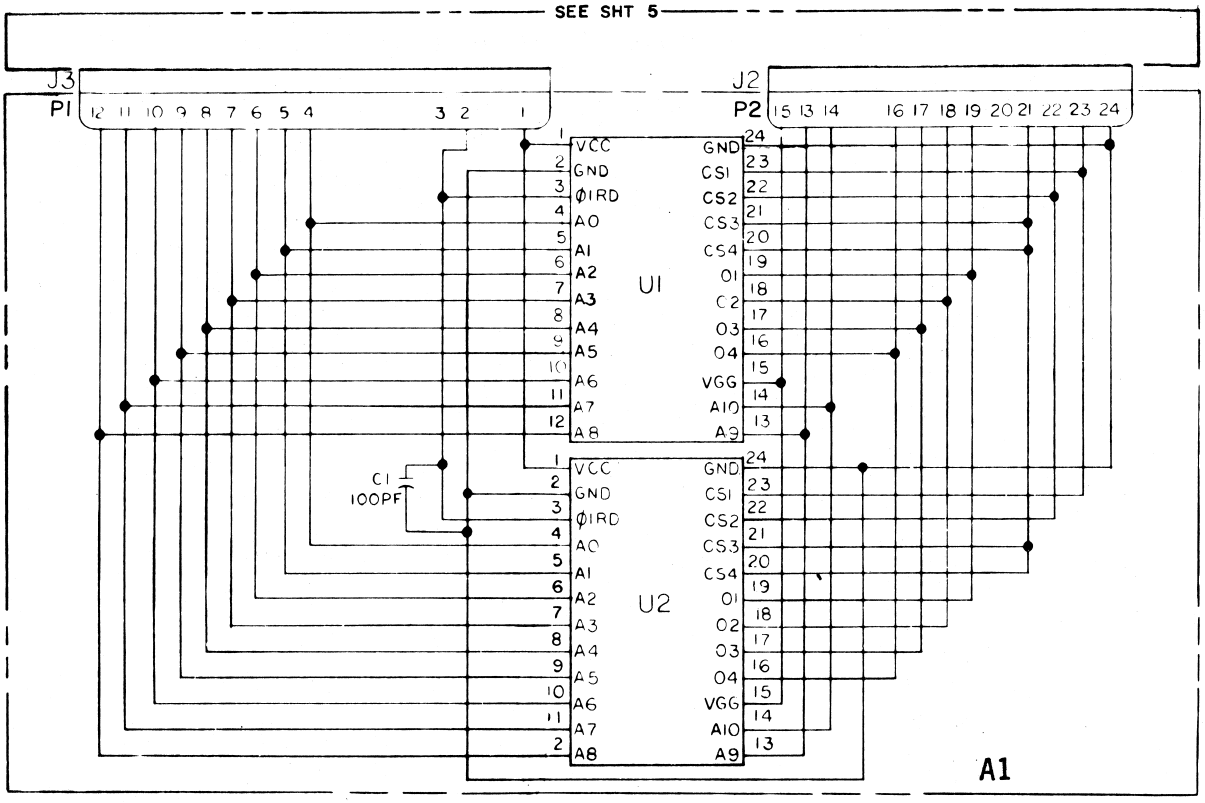

Pull-Up (A4A1)
Schematic Diagram
Figure 116 (Sheet 6 of 6)

REVISION CODE	REVISION DESCRIPTION	SERIAL NO. EFFECTIVITY
1	Added transistor identification to note 2.	All models

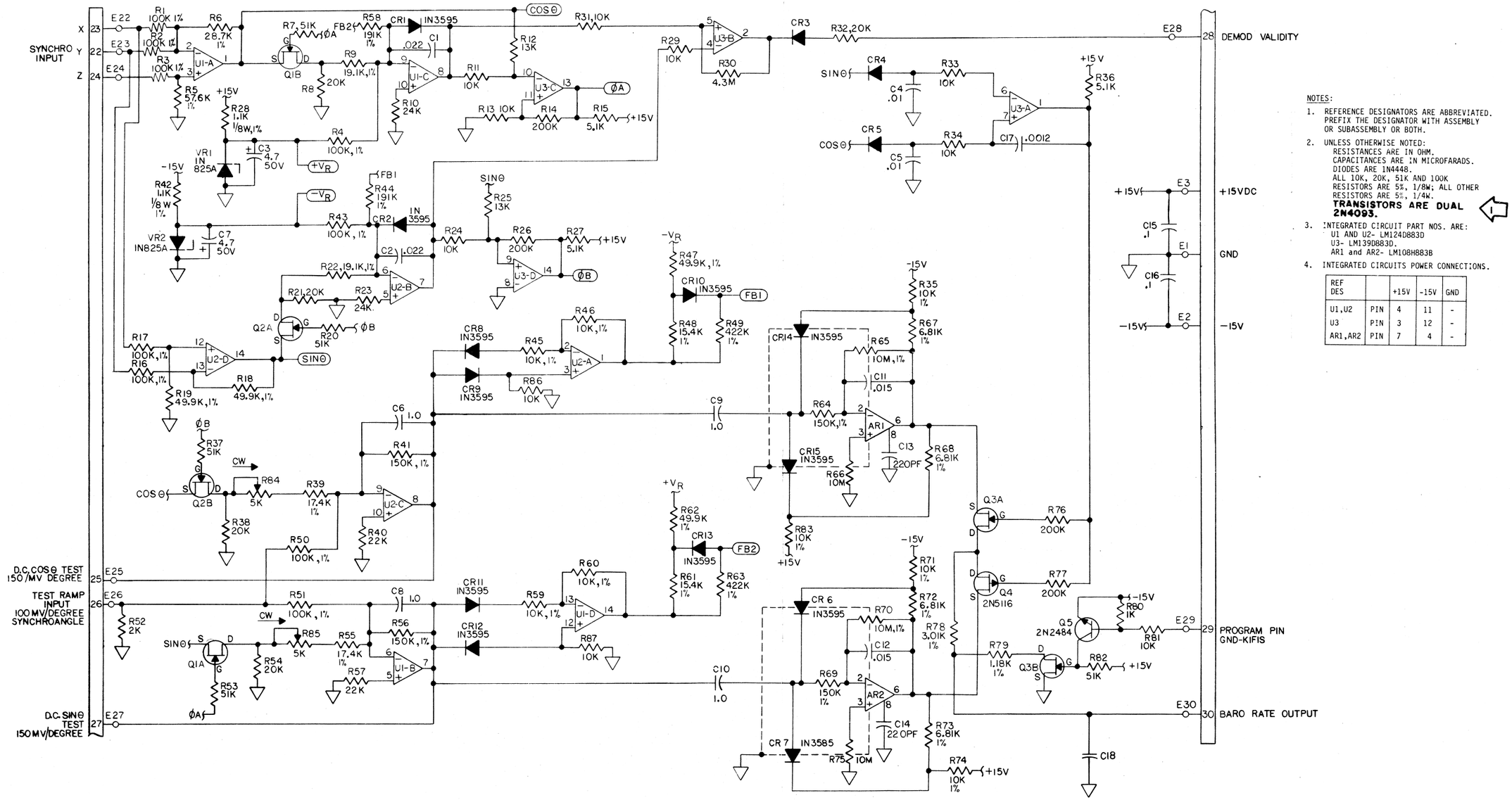

NOTES:

1. REFERENCE DESIGNATORS ARE ABBREVIATED. PREFIX THE DESIGNATOR WITH ASSEMBLY OR SUBASSEMBLY OR BOTH.
2. UNLESS OTHERWISE NOTED:
   RESISTANCES ARE IN OHM.
   CAPACITANCES ARE IN MICROFARADS.
   DIODES ARE 1N4448.
   ALL 10K, 20K, 51K AND 100K RESISTORS ARE 5%, 1/8W; ALL OTHER RESISTORS ARE 5%, 1/4W.
   TRANSISTORS ARE DUAL 2N4093. (1)
3. INTEGRATED CIRCUIT PART NOS. ARE:
   U1 AND U2- LM124D883D
   U3- LM139D883D.
   AR1 and AR2- LM108H883B
4. INTEGRATED CIRCUITS POWER CONNECTIONS.

REF DES		+15V	-15V	GND
U1,U2	PIN	4	11	-
U3	PIN	3	12	-
AR1,AR2	PIN	7	4	-

Synchro Demodulator (A4A2)
Schematic Diagram
Figure 117 (Sheet 2 of 2)

REVISION CODE	REVISION DESCRIPTION	SERIAL NO. EFFECTIVITY
1	R16 was 68K, R17 was 130K, R18 was 110K (SB 7)	All models

Monitor Logic (A5)
Schematic Diagram
Figure 118 (Sheet 1 of 3)

NOTES:

1. REFERENCE DESIGNATORS ARE ABBREVIATED. PREFIX THE DESIGNATOR WITH ASSEMBLY OR SUBASSEMBLY OR BOTH.
2. UNLESS OTHERWISE NOTED:
   RESISTANCES ARE IN OHMS.
   CAPACITANCES ARE IN MICROFARADS.
   DIODES ARE 1N4448.
   ALL 10K, 20K, 30K, 51K AND 100K RESISTORS ARE 5%, 1/8W; ALL OTHER RESISTORS ARE 5%, 1/4W.
3. INTEGRATED CIRCUIT PART NOS. ARE:
   U3- LM124D883B
   U1, U2, U5 AND U6- LM139D883B.
   U4- MC668L.
4. U6D IS AN UNUSED AMPLIFIER.
5. INTEGRATED CIRCUITS POWER CONNECTIONS:

REF DES		+15V	-15V	GND
U3	PIN	4	11	-
U1,U2, U5,U6	PIN	3	-	12
U4	PIN	14	-	7

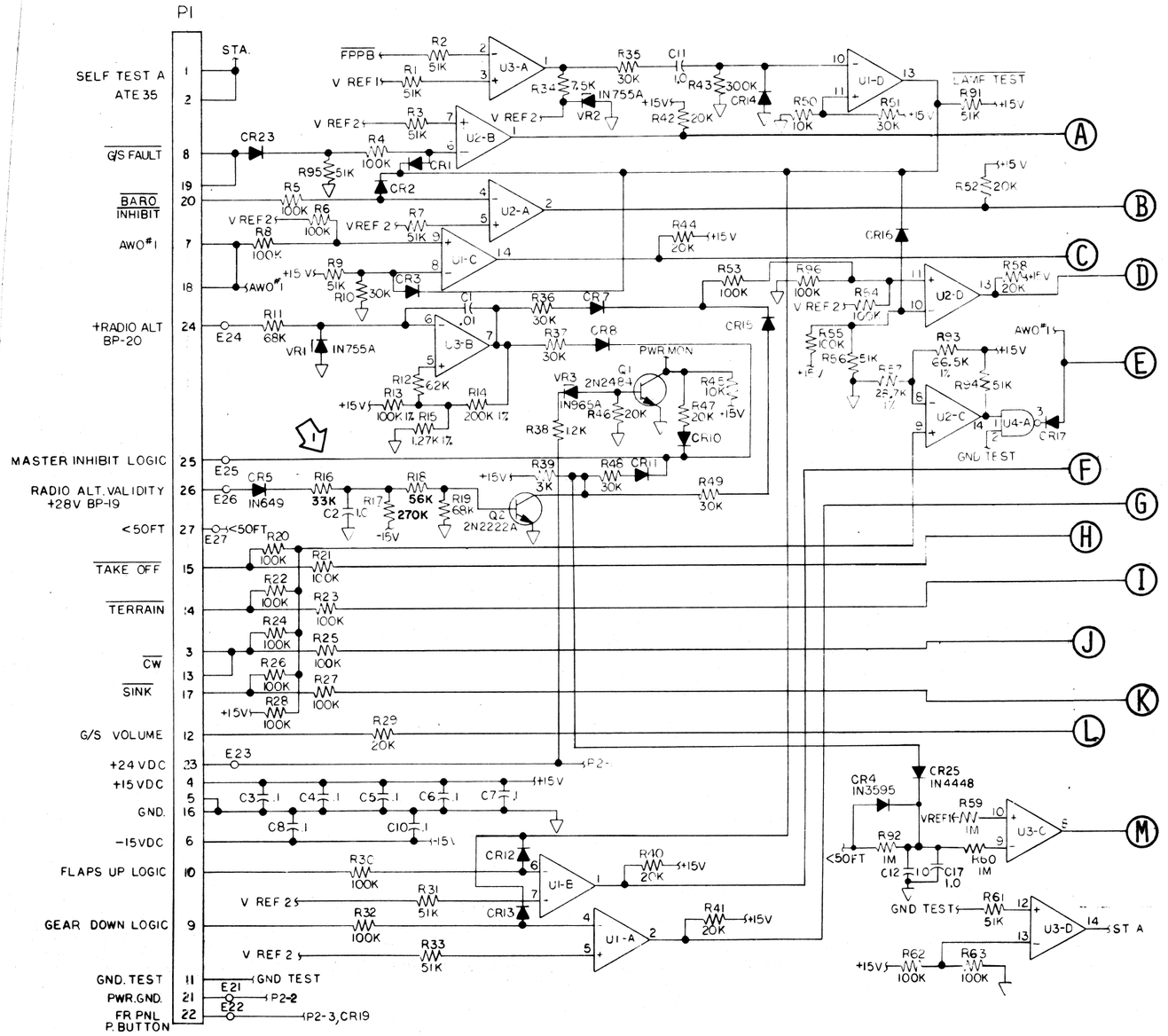

Monitor Logic (A5)
Schematic Diagram
Figure 118 (Sheet 2 of 3)

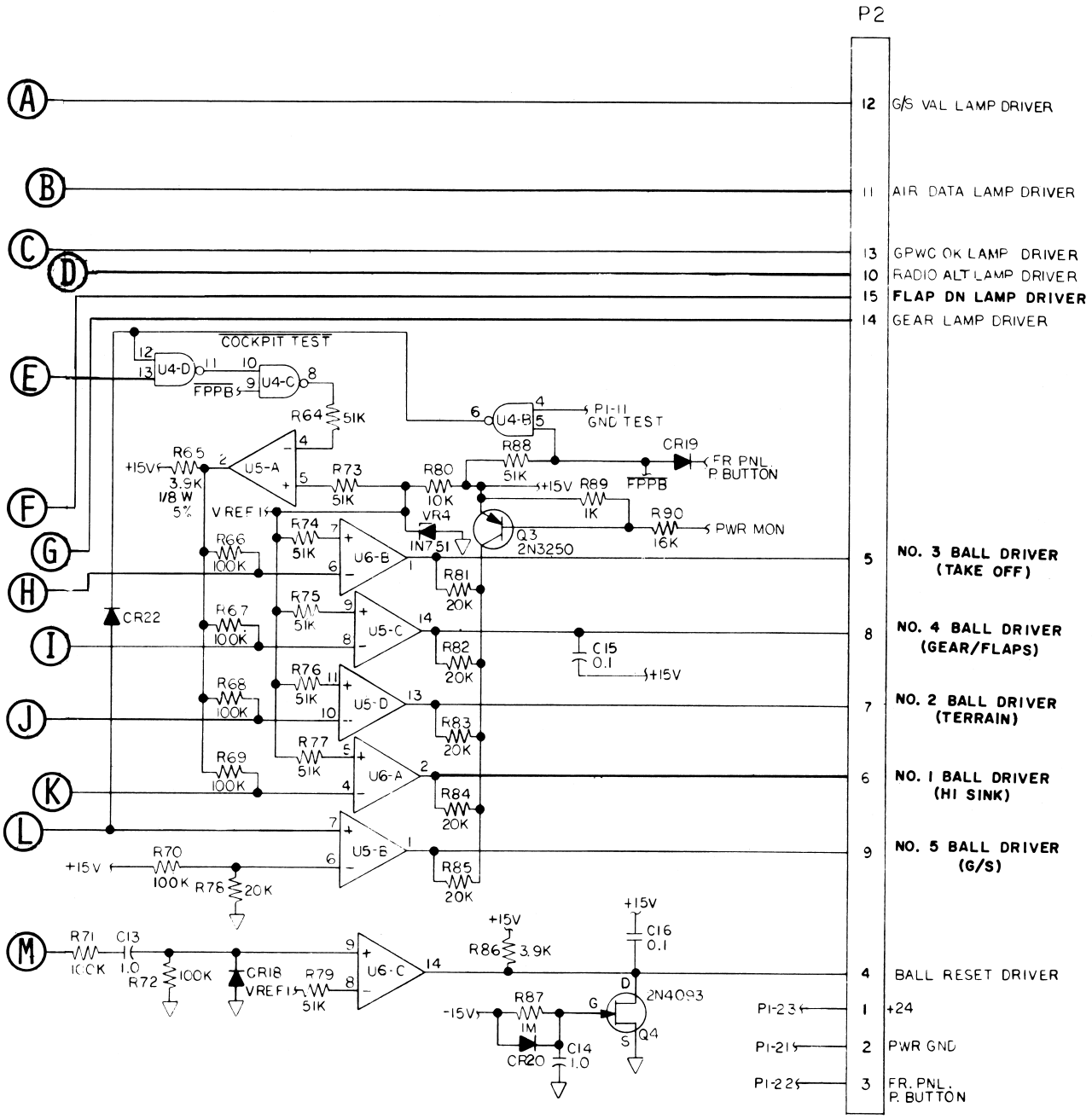

Monitor Logic (A5)
Schematic Diagram
Figure 118 (Sheet 3 of 3)

REVISION CODE	REVISION DESCRIPTION	SERIAL NO. EFFECTIVITY
1	A6A1R1 was 100K (SB 8)	All models
	Part No. 722-1761-006 was 722-1761-004 (SB 8)	Models 070,087

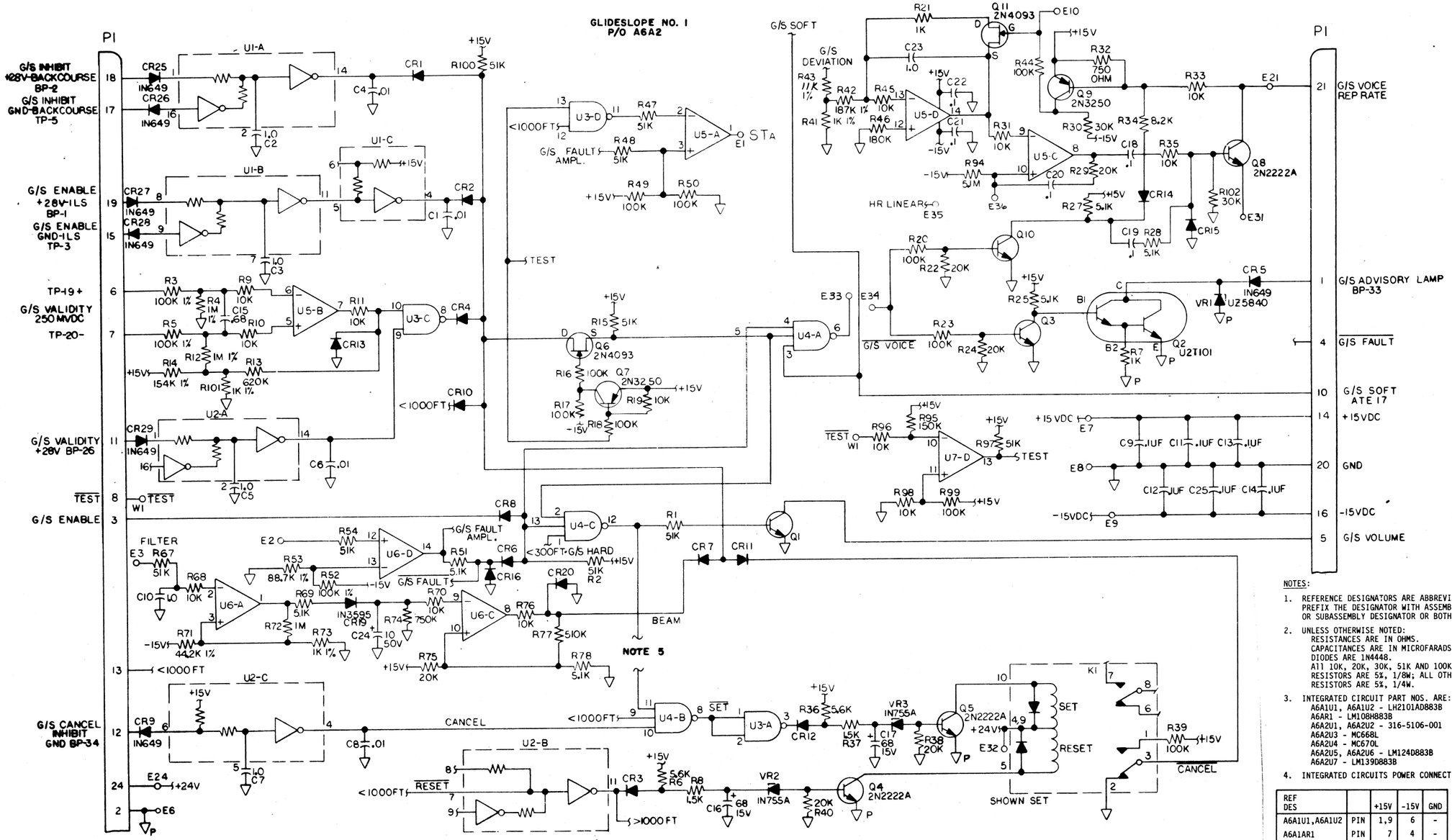

NOTES:

1. REFERENCE DESIGNATORS ARE ABBREVIATED. PREFIX THE DESIGNATOR WITH ASSEMBLY OR SUBASSEMBLY DESIGNATOR OR BOTH.
2. UNLESS OTHERWISE NOTED:
   RESISTANCES ARE IN OHMS.
   CAPACITANCES ARE IN MICROFARADS.
   DIODES ARE 1N4448.
   All 10K, 20K, 30K, 51K AND 100K RESISTORS ARE 5%, 1/8W; ALL OTHER RESISTORS ARE 5%, 1/4W.
3. INTEGRATED CIRCUIT PART NOS. ARE:
   A6A1U1, A6A1U2 - LH2101AD883B
   A6AR1 - LM108H883B
   A6A2U1, A6A2U2 - 316-5106-001
   A6A2U3 - MC668L
   A6A2U4 - MC670L
   A6A2U5, A6A2U6 - LM124D883B
   A6A2U7 - LM139D883B
4. INTEGRATED CIRCUITS POWER CONNECTIONS:

REF DES		+15V	-15V	GND
A6A1U1, A6A1U2	PIN	1,9	6	-
A6A1AR1	PIN	7	4	-
A6A2U1, A6A2U2	PIN	15	13	12
A6A2U3, A6A2U4	PIN	14	-	7
A6A2U5, A6A2U6	PIN	4	11	-
A6A2U7	PIN	3	-	12

5. CONNECTION BETWEEN U4B-11 AND U4C-12, R1 APPLICABLE TO A6A2, PART NO. 722-1762-002 ONLY.
6. RESISTOR R87 IS 249K ON A6A2, PART NO. 722-1762-003, AND R87 IS 267K ON A6A2, PART NOS. 722-1762-001 AND 722-1762-002.
7. RESISTORS R6, R7, R11 AND R13 ARE NOT INSTALLED ON A6A1, PART NO. 722-1761-006

Glideslope (A6)
Schematic Diagram
Figure 119 (Sheet 2 of 3)

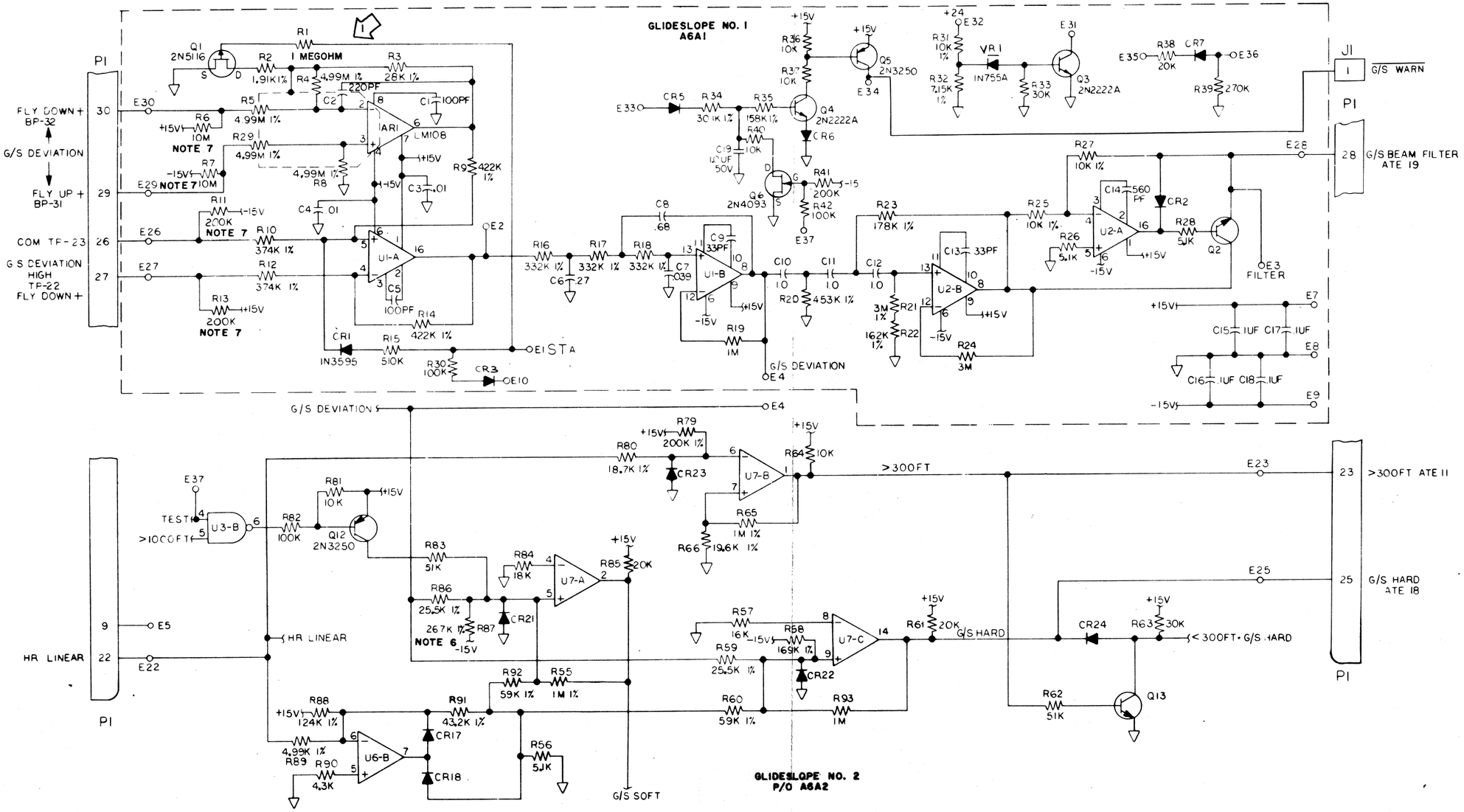

Glideslope (A6)
Schematic Diagram
Figure 119 (Sheet 3 of 3)

REVISION CODE	REVISION DESCRIPTION	SERIAL NO. EFFECTIVITY

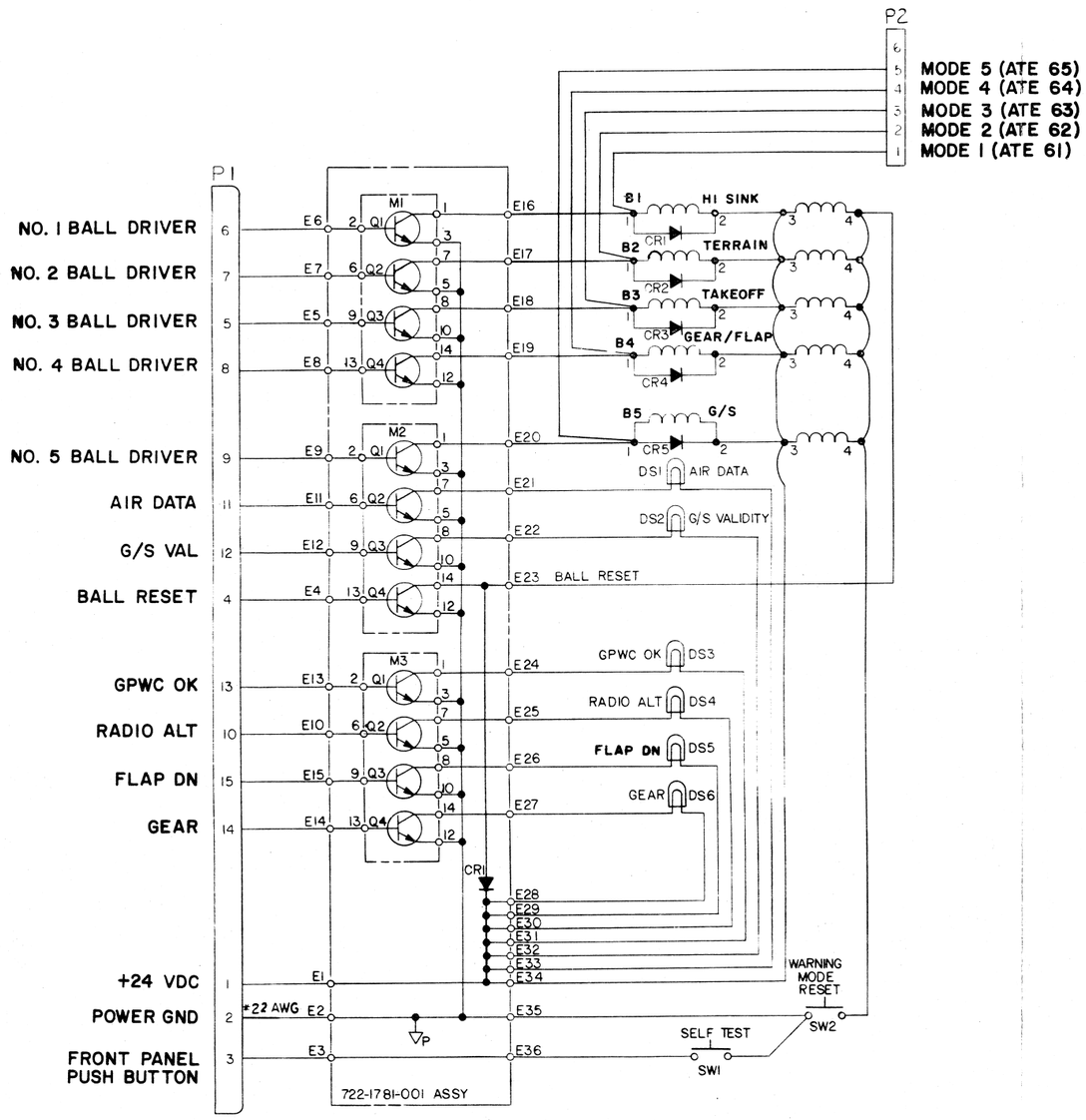

NOTES:

1. REFERENCE DESIGNATORS ARE ABBREVIATED. PREFIX THE DESIGNATOR WITH ASSEMBLY OR SUBASSEMBLY OR BOTH.
2. UNLESS OTHERWISE NOTED:
   DIODES ARE 1N645.
   INTEGRATED CIRCUITS M1, M2 AND M3 ARE DH3725CN.
3. TERMINAL END VIEW OF INDICATORS B1 THRU B5.

Part No. 749-0106-012
Self Test (A7)
Schematic Diagram
Figure 120 (Sheet 2 of 3)

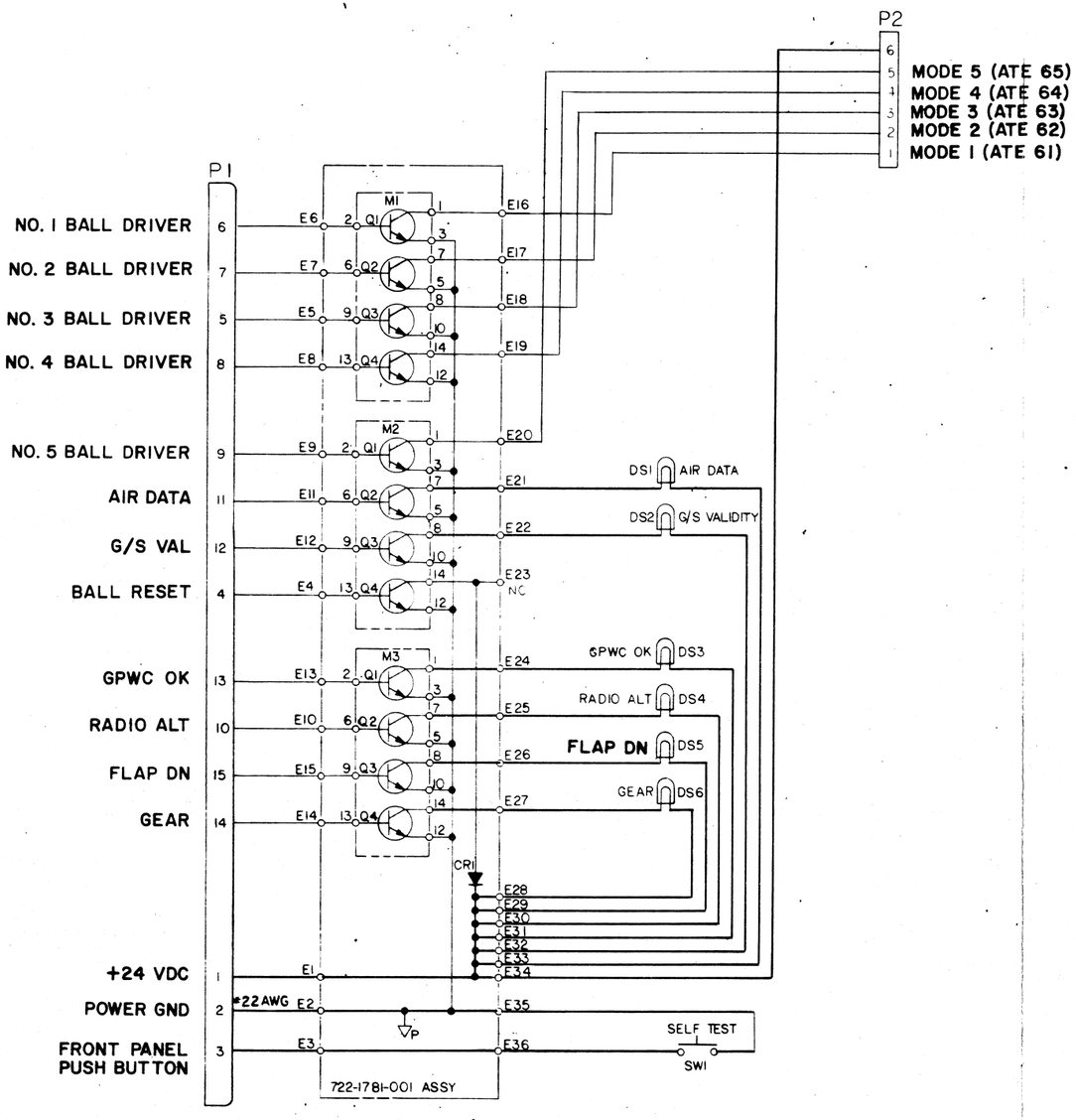

NOTES:

1. REFERENCE DESIGNATORS ARE ABBREVIATED. PREFIX THE DESIGNATOR WITH ASSEMBLY OR SUBASSEMBLY OR BOTH.
2. UNLESS OTHERWISE NOTED:
   DIODES ARE 1N645.
   INTEGRATED CIRCUITS M1, M2 AND M3 ARE DH3725N.

Part No. 749-0106-013
Self Test (A7)
Schematic Diagram
Figure 120 (Sheet 3 of 3)

REVISION CODE	REVISION DESCRIPTION	SERIAL NO. EFFECTIVITY
1	Added terminal numbers E9 thru E14 to 722-1770-001 diagram.	All models
	Added 722-1770-002 diagram.	All models

Code Identifier (A9)
Schematic Diagram
Figure 121 (Sheet 1 of 2)

NOTES:

1. REFERENCE DESIGNATORS ARE ABBREVIATED. PREFIX THE DESIGNATOR WITH ASSEMBLY OR SUBASSEMBLY OR BOTH.
2. UNLESS OTHERWISE NOTED:
   RESISTANCES ARE IN OHMS.
   RESISTORS ARE 1%, 1/10W.
3. FOR PART NO. 965-0376-070, R3 IS 100 OHMS.
   FOR PART NO. 965-0376-071, R3 IS 150 OHMS.
   FOR PART NO. 965-0376-072, R3 IS 182 OHMS.
   FOR PART NO. 965-0376-073, R3 IS 221 OHMS.
   FOR PART NO. 965-0376-079, R3 IS 681 OHMS.
   FOR PART NO. 965-0376-081, R3 IS 1000 OHMS.
   FOR PART NO. 965-0376-087, R3 IS 3920 OHMS.
4. SEE FIGURE 102, 110 OR IPL FIGURE 13 FOR RESISTANCE OF R5.

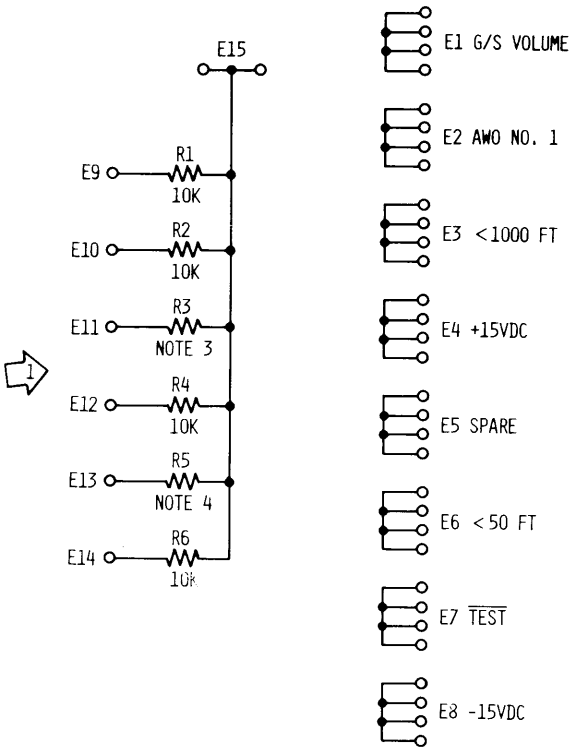

PART NO. 722-1770-001

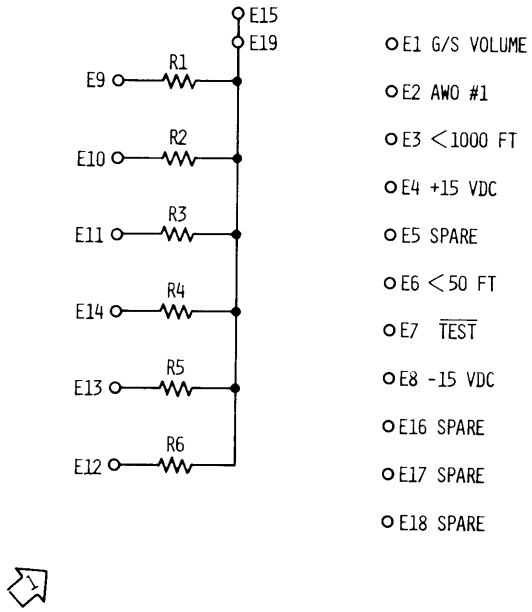

PART NO. 722-1770-002

Code Identifier (A9)
Schematic Diagram
Figure 121 (Sheet 2 of 2)

REVISION CODE	REVISION DESCRIPTION	SERIAL NO. EFFECTIVITY

NOTES:

1. REFERENCE DESIGNATORS ARE ABBREVIATED. PREFIX THE DESIGNATOR WITH ASSEMBLY OR SUBASSEMBLY OR BOTH.
2. UNLESS OTHERWISE NOTED: RESISTANCES ARE IN OHMS.
3. RESISTORS R1 THRU R5 ARE 5%, 1/8W
4. RESISTORS R6 THRU R10 ARE 5%, 1/4W

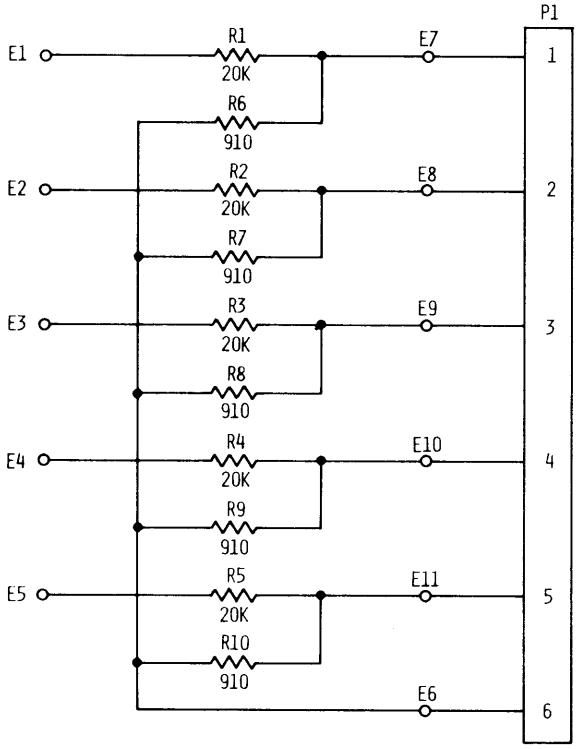

Part No. 722-1802-002

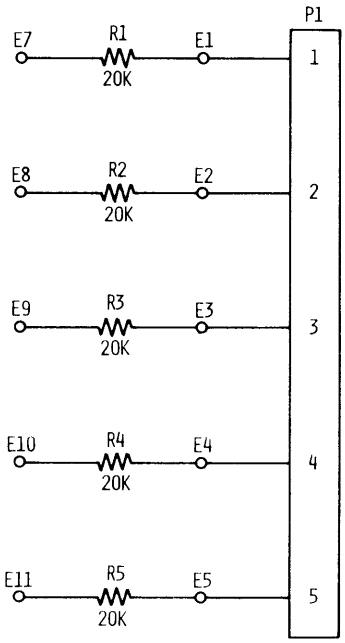

Part No. 722-1802-001

External Counter Driver (A10)
Schematic Diagram
Figure 122 (Sheet 2 of 2)

4. Power supply Assembly (A1) Functional Test, Calibration and Troubleshooting

A. General

This section presents the procedures for testing, calibration and troubleshooting the power supply assembly (A1) with Sundstrand Data Control tester, Part No. 951-0192-XXX. Unless otherwise noted in this section, all reference to controls, jacks, connectors and lights, apply to the lower section of the tester.

B. Test Equipment and Power Requirements

NOTE: Test equipment substitution is permissible provided that the substituted equipment has an accuracy equal to or greater than the specified equipment.

(1) Test Equipment

The test equipment required is delineated in Fig. 123 and listed in Fig. 901.

(2) Power Requirements

Power requirements are noted in Fig. 123 and listed in Fig. 901.

C. Test Setup

NOTE: Fig. 123 delineates the test equipment and test setup.

(1) Position tester controls as noted in para. 3.C.

(2) Connect test fixture, Part No. 649-0419-001, P2 connector to J2 BOARDS connector and P3 connector to tester J3 ATE connector. Secure connectors with jack screws.

(3) Connect test fixture, Part No. 649-0419-001, J1B connector to power supply assembly P1 connector and J2A power supply assembly P2 connector.

(4) Connect 115 vac source to tester 115 VAC jacks. Adjust the 115 vac source for 114 to 116 vac.

(5) Connect DVM to tester METER jacks, and oscilloscope vertical input to tester SCOPE jacks.

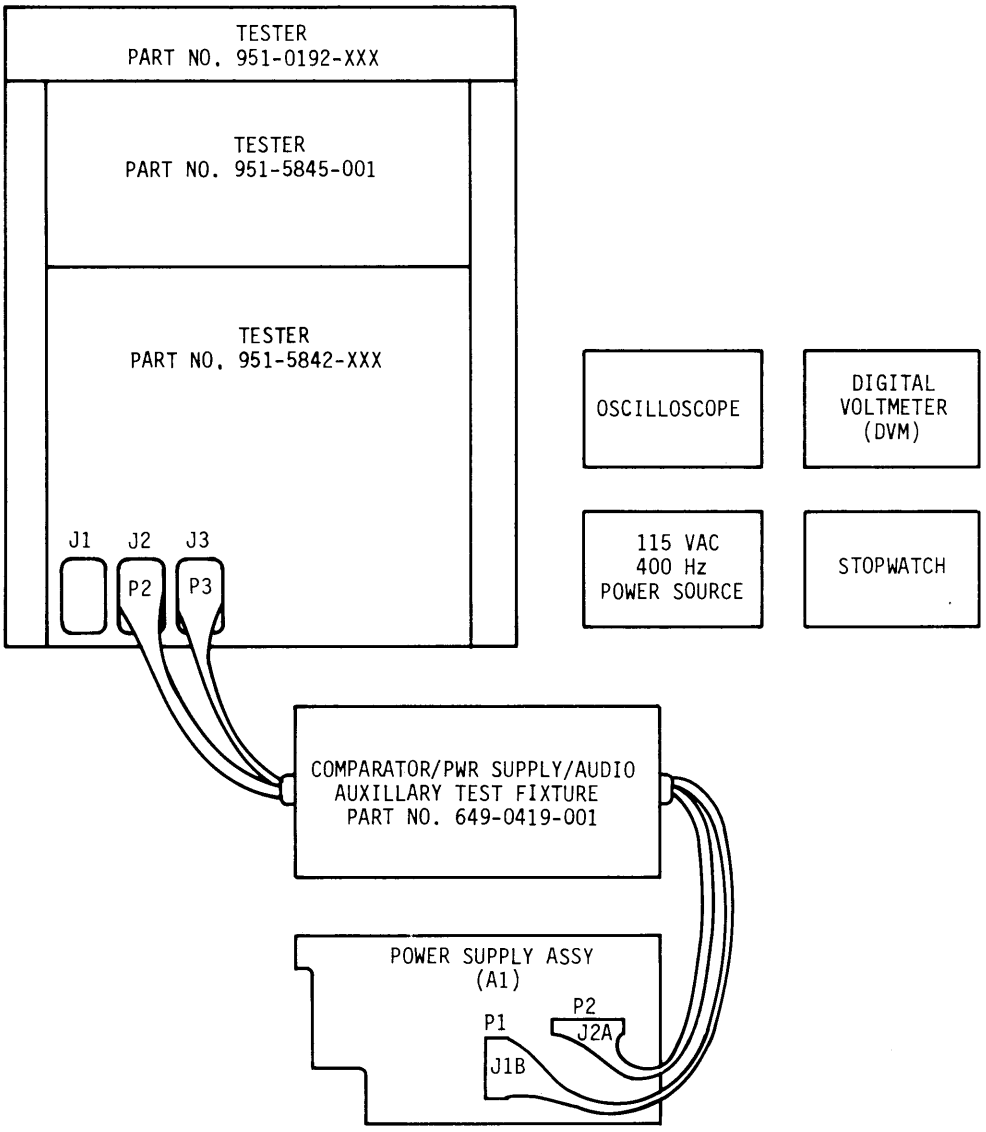

Test Setup
Figure 123

NOTE: Lights not referred to in any step of the following steps may be either on or off.

NOTE: Unless otherwise noted, there shall be no detectable delay in change of status of lights.

NOTE: Unless otherwise noted, all test steps shall be performed in the order listed.

D. Tester Verification

(1) Set TSTR PWR switch to ON and then set COMP PWR switch to ON. Verify that +28V, +15V, -15V and the two 115V lights are on.

(2) Set FUNCT switch to AC.

(3) Set INPUT switch to B and METER SELECT switch to 1. DVM shall indicate 114 to 116 vac. If not, adjust COMP 115 VAC INPUT control for 114 to 116 vac. External power source may have to be increased. If so, do not exceed 120 vac.

(4) Set FUNCT switch to DC.

(5) Set METER SELECT switch to 2. DVM shall indicate +24 to +30 vdc.

(6) Set METER SELECT switch to 3. DVM shall indicate +14.85 to +15.15 vdc. vdc.

(7) Set METER SELECT switch to 4. DVM shall indicate -14.85 to -15.15 vdc.

(8) Set METER SELECT switch to 6. DVM shall indicate +14.95 to +15.05 vdc.

(9) Set METER SELECT switch to 9. DVM shall indicate -14.95 to -15.05 vdc.

(10) Adjust COMP 115 VAC INPUT control for a DVM indication of -14.88 to -14.92 vdc.

(11) Remove DVM HI (+) lead from tester and connect it to test fixture WW jack. DVM shall indicate 11.6 to 12.8 vac. Return DVM HI (+) lead to tester HI jack.

(12) Set METER SELECT switch to 6. Adjust COMP 115 VAC INPUT control for a DVM indication of +14.88 to +14.92 vdc.

(13) Remove DVM HI (+) lead from tester and connect it to test fixture WW jack. DVM shall indicate 12.6. to 13.8 vac. Return DVM HI (+) lead to tester HI jack.

E. Functional Test

(1) Ground and Air Test

(a) Set METER SELECT switch to 1 and FUNCT switch to AC. Increase COMP 115 VAC INPUT control until DVM indicates 114 to 116 vac. Set FUNCT switch to DC.

(b) Set SELF TEST switch to ON. Verify that 50 FT light is on.

(c) Set LIMIT switch to GND. Verify that 50 FT light is on.

(d) Set SELF TEST switch to OFF. Verify that 50 FT light is on.

(e) Set 50 FT switch to < 50. Verify that 50 FT light is on.

(f) Set LIMIT switch to OPEN. Verify that 50 FT light goes off.

(g) Set SELF TEST switch to ON. Verify that 50 FT light comes on.

(h) Set LIMIT switch to GND. Verify that 50 FT light is on.

(2) Flaps and Gear Logic Test

(a) Set 700 FT switch to <700 and TC switch to <TC. Wait five seconds before preceeding.

(b) Set INHIBIT switch to ON, T.OFF switch to TRUE, LIMIT switch to OPEN and BARO switch to TRUE. Verify that T.OFF lamp comes on.

(c) Set FLAPS switch to UP. Verify that T.OFF light goes off.

(d) Set SELF TEST switch to OFF. Verify that T.OFF light comes on.

(e) Set FLAPS switch to DOWN. Verify that T.OFF light is on.

(f) Set GEAR switch to UP. Verify that T.OFF light is on.

(g) Set 50 FT switch >50. Verify that T.OFF light goes off.

(h) Set FLAPS switch to UP. Verify that T.OFF light is off.

(i) Set 50 FT switch < 50. Verify that T.OFF light comes on.

(j) Set SELF TEST switch to ON. Verify that T.OFF light goes off.

(k) Set FLAPS switch to DOWN. Verify that T.OFF light is off.

(3) Take Off Logic Test

(a) Set BARO switch to FALSE. Verify that T.OFF light comes on.

(b) Set BARO switch to TRUE. Verify that T.OFF light goes off.

(c) Set T.OFF switch to FALSE. Verify that T.OFF light comes on.

(d) Set T.OFF switch to TRUE. Verify that T.OFF light goes off.

(e) Set 700 FT switch to > 700. Verify that T.OFF light comes on.

(f) Set 700 FT switch to < 700. Verify that T.OFF light goes off.

(g) Set GEAR switch to DOWN, TC switch to > TC, INHIBIT switch to OFF and wait five seconds. Set 700 FT switch to > 700 and wait five seconds. Set 700 FT switch to < 700 and GEAR switch to UP. Verify that T.OFF light comes on.

(h) Set GEAR switch to DOWN, TC switch to < TC and wait five seconds. Set INHIBIT switch to ON and GEAR switch to UP. Verify that T.OFF light goes off.

(4) $\overline{\text{Sink}}$ Logic Test

(a) Set BARO switch to FALSE. Verify that SINK light is on.

(b) Set BARO switch to TRUE. Verify that SINK light is on.

(c) Set SINK switch to < SINK. Verify that SINK light is on.

(d) Set BARO switch to FALSE. Verify that SINK light is on.

(e) Set 2450 FT switch to < 2450. Verify that SINK light is on.

(f) Set SINK switch to >SINK. Verify that SINK light is on.

(g) Set BARO switch to TRUE. Verify that SINK light is on.

(h) Set SINK switch to <SINK. Verify that SINK light goes off.

(i) Set SINK switch to>SINK. Verify that SINK light comes on.

(j) Set SELF TEST switch to OFF. Verify that TC light comes on.

(k) Set LIMIT switch to GND. Verify that TC light goes off.

(l) Set 50 FT switch to >50. Verify that TC light comes on.

(m) Set LIMIT switch to OPEN. Verify that TC light is on.

(n) Connect oscilloscope trigger input to test fixture DD jack. Set scope trigger to negative slope, external, DC, vertical selector to 5 volts/div., and horizontal selector to 0.5 sec/div.

(o) Set INPUT switch to A, METER SELECT switch to 15 and INHIBIT switch to OFF. Wait five seconds minimum before proceeding.

(p) Measure, on scope display, the time from setting 700 FT switch to >700 until scope drops to about 0 vdc. The time shall be 1.5 to 2.5 seconds. The TC light shall go off.

NOTE: Step (p) may be repeated as follows. Set 700 FT switch to <700 and GEAR switch to DOWN. Wait five seconds minimum before proceeding. Get GEAR switch to UP and perform step (p).

(5) $\overline{\text{Terrain}}$ Logic Test

(a) Set INHIBIT switch to ON and GEAR switch to DOWN. Verify that TC light comes on.

(b) Set TC switch to >TC. Verify that TC light is on.

(c) Set GEAR switch to UP. Verify that TC light is on.

(d) Set TC switch to <TC. Verify that TC light goes off.

(6) Air Logic Test

(a) Connect jumper between test fixture K and A jacks. Wait five seconds minimum. Verify that TEST light is off.

(b) Set LIMIT switch to GND. Verify that TEST light comes on.

(c) Set 1000 FT switch to <1000. Verify that TEST light goes off.

(d) Set 1000 FT switch to >1000. Verify that TEST light comes on.

(e) Set GEAR switch to DOWN. Verify that TEST light goes off.

(f) Set GEAR switch to UP. Verify that TEST light comes on.

(g) Set 50 FT switch to <50. Verify that TEST light is on.

(h) Set 50 FT switch to >50. Verify that TEST light is on.

(i) Remove jumper from test fixture K and A jacks. Verify that TEST light is off.

(7) Validity Relay Test

(a) Set INPUT switch to B, METER SELECT switch to 19, GEAR switch to DOWN and INHIBIT switch to OFF. Wait five seconds minimum before proceeding. Set CW switch to CW. Verify that AURAL and 1 lights comes on and that 3 light is flashing.

(b) Measure, on scope display, one complete on/off (0V/+28V) cycle. The time shall be 0.7 to 1.5 seconds.

(c) Measure, on scope display, the time that 3 light is on (0 volts) before going off (+28 volts). The time shall be 0.4 to 0.8 seconds. Wait three second minimum before proceeding.

(d) Set INHIBIT GND switch to ON. Verify that AURAL, 1 and 3 lights go off.

For Part No. 722-1799-004, verify that GPWS VAL light goes off.

For Part No. 722-1799-005, verify that GPWS VAL light comes on.

Wait three seconds minimum before proceeding.

(e) Set INHIBIT +28 switch to ON. Verify that AURAL, 1 and 3 lights are off.

For Part No. 722-1799-004, verify that GPWS VAL light is off.

For Part No. 722-1799-005, verify that GPWS VAL light is on.

Wait three seconds minimum before proceeding.

(f) Set 50 FT switch to <50 and SELF TEST switch to ON.

For Part No. 722-1799-004, verify that AURAL, 1 and 3(flashing) lights are off.

For Part No. 722-1799-005, verify that AURAL, 1 and 3 lights are on.

Wait three seconds minimum before proceeding.

(g) Set 50 FT switch to >50, SELF TEST switch to OFF and INHIBIT GND switch to OFF. Verify that AURAL, 1 and 3 lights are off.

(h) Connect oscilloscope trigger input to test fixture JJ jack. Set scope trigger to negative slope , vertical selector to 10 volts/div., and horizontal selector to 0.5 sec/div.

(i) Set INPUT switch to C and METER SELECT switch to 7. Measure, on scope display, the time from setting INHIBIT +28 switch to OFF until scope drops to about 0 vdc.

For Part No. 722-1799-004, the time shall be 2.3 to 3.8 seconds.

For Part No. 722-1799-005, the time shall be 0.8 to 1.4 seconds.

Verify that AURAL and 1 lights are on and that 3 light is flashing.

(8) Integrate Logic Test

(a) Set 700 FT switch to <700 and wait five seconds before proceeding. Set INHIBIT switch to ON, 50 FT switch to <50 and LIMIT switch to OPEN. Set INPUT switch to B and METER SELECT switch to 18. DVM shall indicate +7.2 to +7.8 vdc.

(b) Set SELF TEST switch to ON. DVM shall indicate +7.2 to +7.8 vdc.

(c) Set FLAPS switch to UP. DVM shall indicate +0.4 to +0.8 vdc.

(d) Set SELF TEST switch to OFF. DVM shall indicate +7.2 to +7.8 vdc.

(e) Set TC switch to >TC, 700 FT switch >700 and INHIBIT switch to OFF. Wait five seconds minimum. DVM shall indicate +7.2 to +7.8 vdc.

(f) Set SELF TEST switch to ON. DVM shall indicate +7.2 to +7.8 vdc.

(g) Set FLAPS switch to DOWN. DVM shall indicate +7.2 to +7.8 vdc.

(h) Set SELF TEST switch to OFF. DVM shall indicate +7.2 to +7.8 vdc.

(9) Inhibit and Validity Relay Test

NOTE: Wait seven seconds minimum before observing status of GPWS VAL light in steps (9)(a) thru (10)(f).

(a) Set INHIBIT switch to ON. Install jumper between test fixture K and A jacks. Set 1000 FT switch to <1000, 50 FT switch to >50, LIMIT switch to GND and GEAR switch to UP. Verify that GPWS VAL light is on.

(b) Connect oscilloscope trigger input to test fixture T jack. Set vertical selector to 5 volts/div., and horizontal selector to 1 sec/div.

(c) Set INPUT switch to C and METER SELECT switch to 8. Measure, on scope display, the time from setting GS switch to ON until scope goes to about +28 vdc. The time shall be 4.7 to 5.5 seconds. Verify that GPWS VAL light is off.

NOTE: A stop watch may be used if scope will not go to 1 sec/div. If stop watch is used, the time shall be 5.2 to 6.0 seconds.

(d) Set scope trigger to positive slope and horizontal selector to 50 milliseconds/div.

(e) Measure, on scope display, the time from setting GS switch to OFF until scope goes to about 0 vdc. The time shall be 0.08 to 0.13 seconds. Verify that GPWS VAL is on.

NOTE: A stop watch may be used if scope will not go to 1 sec/div. If stop watch is used, the time shall be 0.13 to 0.18 seconds.

(f) Set BARO switch to FALSE. Verify that GPWS VAL light is off.

(g) Set BARO switch to TRUE. Verify that GPWS VAL light is on.

(h) Set 1000 FT light to >1000. Verify that GPWS VAL light is off.

(i) Set 1000 FT light to <1000. Verify that GPWS VAL light is on.

(j) Remove jumper from test fixture K and A jacks. Wait seven seconds and verify that GPWS VAL light is off.

(k) Connect oscilloscope trigger input to test fixture K jack. Set scope trigger to negative and horizontal selector to 0.5 sec/div.

(1) Measure, on scope display, the time from setting INHIBIT switch to OFF until scope goes to about 0 vdc. The time shall be 2.6 to 3.8 seconds. Verify that GPWS VAL light is on.

(10) Power Monitor Test

(a) Set PWR MON 1 switch to ON. Verify that GPWS VAL light is off.

(b) Set PWR MON 2 to ON. Verify that GPWS VAL light is off.

(c) Ser PWR MON 1 to OFF. Verify that GPWS VAL light is off.

(d) Set PWR MON 2 to OFF. Verify that GPWS VAL Light is on.

(e) Set LIMIT switch to OPEN and 50 FT switch to <50. Wait seven seconds before proceeding. Verify that GPWS VAL light is on.

(f) Set GEAR switch to DOWN. Verify that GPWS VAL light is on.

(11) Take Off Relay Switch Test

(a) Set INHIBIT switch to ON, 700 FT switch <700 and GEAR switch to UP. Verify that T.OFF light is on.

(b) Set TC switch to <TC, 50 FT switch >50, GEAR switch to DOWN, and INHIBIT switch to OFF. Wait five seconds minimum before proceeding. Set INHIBIT switch to ON and GEAR switch to UP. Verify that T.OFF light is off.

(c) Set 700 FT switch to >700, INHIBIT switch to OFF. Wait five seconds minimum before proceeding. Set INHIBIT switch to ON and 700 FT switch to <700. Verify that T.OFF light is on.

(d) Set INHIBIT switch to OFF. Wait five seconds before proceeding. Set FLAPS switch to UP, 50 FT switch to <50 and GEAR switch to DOWN. Wait five seconds before proceeding. Set INHIBIT switch to ON and GEAR switch to UP. Verify that T.OFF light is on.

(e) Set 700 FT switch to >700, INHIBIT switch to OFF and 50 FT switch to >50. Wait five seconds minimum before proceeding. Set INHIBIT switch to ON and 700 FT switch to <700. Verify that T.OFF light is on.

(f) Set FLAPS switch to DOWN and INHIBIT switch to OFF. Wait five seconds minimum before proceeding. Verify that T.OFF light is on.

(g) Set 700 FT switch to >700, INHIBIT switch to ON and 700 FT switch to <700. Verify that T. OFF light is on.

(h) Set TC switch to >TC, GEAR switch to DOWN and INHIBIT switch to OFF. Wait five seconds minimum before proceeding. Set INHIBIT switch to ON and GEAR switch to UP. Verify that T.OFF light is on.

(i) Set INHIBIT switch to OFF. Wait five seconds minimum before proceeding. Set 700 FT switch to >700, INHIBIT switch to ON and 700 FT switch to <700. Verify that T. OFF light is on.

(j) Set TC switch to <TC, GEAR switch to DOWN, FLAPS switch to UP and INHIBIT switch to OFF. Wait five seconds minimum before proceeding. Set INHIBIT switch to ON and GEAR switch to UP. Verify that T.OFF light is on.

(12) Event Recorder Monitor Test

(a) Set INHIBIT switch to OFF. Wait five seconds minimum before proceeding. Set GEAR switch to DOWN. Verify that EVENT light in on.

(b) Set INHIBIT switch to ON. Verify that EVENT light is off.

(c) Remove scope trigger lead from fixture K jack and install jumper between test fixture K and A jacks. Wait five seconds before proceeding. Verify that EVENT light is on.

(d) Connect scope vertical input to test fixture W jack and trigger input to test fixture J jack. Set vertical selector to 10 volts/div., and horizontal selector to 50 milliseconds/div.

(e) Set LIMIT switch to GND and GEAR switch to UP. Measure, on scope display, the time from setting 1000 FT switch to >1000 until scope goes to about +28 vdc. The time shall be 0.10 to 0.26 seconds. Verify that EVENT light is off.

(f) Set scope trigger to positive slope and horizontal selector to 1.0 sec/div.

(g) Measure, on the scope display, the time from setting 1000 FT switch to <1000 until scope drops to about 0 vdc. The time shall be 4.5 to 6.5 seconds. Verify that EVENT light is on.

NOTE: A stop watch may be used if scope will not go to 1 sec/div. If stop watch is used, the time shall be 5.0 to 7.0 seconds.

(h) Set 50 FT switch to <50. Verify that EVENT light is off.

(i) Set 50 FT switch to >50. Wait five seconds minimum before proceeding. Verify that EVENT light is on.

(j) Set INHIBIT +28 switch to ON.

For Part No. 722-1799-004, verify that EVENT light is on.

For Part No. 722-1799-005, verify that EVENT light is off.

(k) Set INHIBIT +28 switch to OFF. Wait five seconds minimum before proceeding. Verify that EVENT light is on.

(13) G/S Enable Monitor Logic Test

(a) Set GEAR switch to DOWN, FLAPS switch to DOWN and INHIBIT switch to OFF. Remove jumper from test fixture A to K jacks. Set FLAPS switch to UP. Verify that GS VOL light is on.

(b) Set FLAPS switch to DOWN. Verify that GS VOL light is off.

(c) Set FLAPS switch to UP. Verify that GS VOL light is on.

(d) Set 50 FT switch to <50. Verify that GS VOL light is off.

(e) Set 50 FT switch to >50. Verify that GS VOL light is on.

(f) Set 700 FT switch to >700. Wait five seconds minimum before proceeding. Verify that GS VOL light is off.

(g) Set INHIBIT switch to ON. Verify that GS VOL light is on.

(h) Set INHIBIT switch to OFF. Wait five seconds minimum before proceeding. Verify that GS VOL light is off.

(i) Set GEAR switch to UP. Verify that GS VOL light is on.

(j) Set GEAR switch to DOWN. Verify that GS VOL light is off.

(k) Set 1000 FT switch to >1000 and GEAR switch to UP. Verify that GS VOL light is off.

(l) Set GEAR switch to DOWN. Verify that GS VOL light is off.

(m) Set TC switch to >TC, LIMIT switch to OPEN and 50 FT switch to <50. Verify that GS VOL light is on.

(n) Set 50 FT switch to >50. Verify that GS VOL light is off.

(14) Internal Power Control Test

NOTE: Wait two seconds minimum before observing status of 1 light in steps (14)(a) thru (14)(n).

(a) Set 700 FT switch to <700, TC switch to <TC, CW switch to $\overline{CW}$ and FLAPS switch to DOWN. Wait five seconds before proceeding. Install jumper between test fixture K and A jacks. Set 50 FT switch to <50, LIMIT switch to GND, GEAR switch to UP and BARO switch to FALSE. Verify that 1 light is on.

(b) Set TC switch to >TC. Verify that 1 light is off.

(c) Set 2450 switch to >2450, 1000 FT switch to <1000, 50 FT switch to >50, T·OFF switch to FALSE and BARO switch to TRUE. Verify that 1 light is off.

(d) Set T·OFF switch to TRUE. Verify that 1 light is on.

(e) Set T·OFF switch to FALSE. Verify that 1 light is off.

(f) Set 2450 switch to <2450. Verify that 1 light is off.

(g) Set 2450 switch to >2450. Verify that 1 light is off.

(h) Set CW switch to CW. Verify that 1 light is on.

(i) Set CW switch to $\overline{CW}$. Verify that 1 light is off.

(j) Set 50 FT switch to <50. Verify that 1 light is on.

(k) Set BARO switch to FALSE. Verify that 1 light is off.

(l) Set BARO switch to TRUE. Verify that 1 light is on.

(m) Set 50 FT switch to >50. Verify that 1 light is off.

(n) Set 50 FT switch to <50. Verify that 1 light is on.

(147) Set TSTR PWR switch to OFF. Disconnect power supply assembly from test setup.

F. Calibration Procedure

(1) Calibration Setup

Prepare calibration setup the same as test setup, para. 4.C. and 4.D.(1).

(2) Power Verification

(a) Set FUNCT switch to AC, INPUT switch to B and METER SELECT switch to 1. Slowly adjust COMP 115 VAC INPUT control for a 80 to 85 vac indication on DVM.

(b) Set FUNCT switch to DC and METER SELECT switch to 6. DVM shall indicate +13 to +17 vdc.

(c) Set METER SELECT switch to 9. DVM shall indicate -13 to -17 vdc.

(3) +15 vdc Calibration

(a) Set FUNCT switch to AC and METER SELECT switch to 1. Adjust COMP 115 VAC INPUT control for a 114 to 116 vac indication on DVM.

(b) Set FUNCT switch to DC and METER SELECT switch to 6. Adjust R73 for a DVM indication of +14.995 to +15.005 vdc.

(4) -15 vdc Calibration

(a) Set METER SELECT switch to 9. Adjust R80 for a DVM indication of -14.995 to -15.005 vdc.

(5) Power Monitor Test

(a) Set CW switch to CW. Verify that AURAL and 1 lights come on after a slight delay.

(b) Temporarily ground gate of Q1. Verify that AURAL and 1 lights go off.

(6) Perform functional test per para. 4.E.

G. Troubleshooting

Troubleshooting procedures (Ref. Fig. 124) indicate the most probable trouble areas for various malfunctions, their probable cause and correction.

TEST STEP	TROUBLE	PROBABLE CAUSE	CORRECTION
4.D.	Tester Verification		
(1)	All tester lights off.	(a) Blown tester fuse F1.	Replace.
		(b) Loss of tester 115 vac input.	Connect tester to 115 vac power source.
		(c) Tester defective.	Repair.
	Tester TSTR PWR 115V light only is on.	(a) Blown internal tester fuse on +24 vdc supply.	Replace.
		(b) Tester defective.	Repair.
	Any one tester light only is off.	See below.	
	Proceed to test step 4.D.(2) and repair as indicated below.		
(2) thru (7)	Voltage within tolerance.	(a) Defective lamp.	Replace.
		(b) Tester defective.	Repair.
	Voltage out of tolerance.	(a) Tester defective.	Repair
		(b) Excessive load.	Isolate short on assembly under test.
(8)	Voltage out of tolerance.	VR7,Q24 and/or associated components defective.	Replace.
(9)	Voltage out of tolerance.	VR8 and/or associated components defective.	Replace.
(11)	Voltage out of tolerance.	VR7,C13,C14,C15 and/or associated components defective.	Replace.
(13)	Voltage out of tolerance.	VR8,C20,C21,C22, and/or associated components defective.	Replace.

TEST STEP	TROUBLE	PROBABLE CAUSE	CORRECTION
4.E.(1)	Ground and Air Test		
(b)	50 FT light is off.	U3C defective.	Replace.
(d)	50 FT light is off.	U1C,U3C,U3A,CR12 and/or associated components defective.	Replace.
(f)	50 FT light is on.	U1C,U3A and/or associated components defective.	Replace.
(g)	50 FT light is off.	CR13 defective.	Replace.
4.E.(2)	Flaps and Gear Logic Test		
(b)	T.OFF light is off.	(a) U5C,U7C,U3D and/or Q12 defective.	Replace.
		(b) K1,Q10,Q11,Q12 and/or associated components defective.	Replace.
(c)	T.OFF light is on.	U4D,U3D,U7C and/or U6E defective.	Replace.
(d)	T.OFF light is off.	U3D,U4D,U4B and/or U7C defective.	Replace.
(f)	T.OFF light is off.	U4B,U6F and/or U3D defective.	Replace.
(g)	T.OFF light is on.	U4B,U4D and/or U5C defective.	Replace.
(j)	T.OFF light is on.	U3A,U3C,U3D,U4B and/or U4D defective.	Replace.

TEST STEP	TROUBLE	PROBABLE CAUSE	CORRECTION
4.E.(3)	Take Off Logic Test		
(a)	T.OFF light is off.	CR34 and/or U5C defective.	Replace.
(c)	T.OFF light is off.	CR35 and/or U5C defective.	Replace.
(e)	T.OFF light is off.	CR36 and/or U5C defective.	Replace.
(g)	T.OFF light is off.	Q6 thru Q12,W1 and/or associated components defective.	Replace.
(h)	T.OFF light is on.	(a) U7C,Q11,K1 and/or associated components defective.	Replace.
		(b) U5C defective.	Replace.
4.E.(4)	Sink Logic Test		
(a) thru (i)	SINK light is off.	U7B defective.	Replace.
(j)	TC light is off	U4C and/or U7A defective.	Replace.
(k)	TC light is on.	U4C and/or U7A defective.	Replace.
(l)	TC light is off.	U4C and/or U7A defective.	Replace.
(m)	TC light is off.	U3A defective.	Replace.
(p)	TC light is on.	U4C defective.	Replace.
	Timing out of tolerance.	Q10,Q12,C4 and/or associated components defective.	Replace.

TEST STEP	TROUBLE	PROBABLE CAUSE	CORRECTION
4.E.(5)	Terrain Logic Test		
(a)	TC light is off.	U7C,Q11,K1 and/or associated components defective.	Replace.
(b) and (c)	TC light is off.	U7A defective.	Replace
(d)	TC light is on.	U7A defective.	Replace.
4.E.(6)	Air Logic Test		
(a)	TEST light is off.	U7A,CR39,U6D,U2D,U2C and/or Q21 defective.	Replace.
(c)	TEST light is on.	U6D,U2D,CR14,U2C and/or Q21 defective.	Replace.
(d)	TEST light is off.	U6D defective.	Replace.
(e)	TEST light is on.	CR15 and/or U2C defective.	Replace.
(g)	TEST light is off.	U2C defective.	Replace.
(h)	TEST light is off.	U2C and/or U3A defective.	Replace.
(i)	TEST light is on.	Q6 thru Q9 and/or associated components defective.	Replace.
4.E.(7)	Validity Test		
(a)	AURAL, 1 and 3 lights off.	(a) CR41 defective. (b) Q13,U8B and/or associated components defective.	Replace. Replace.

TEST STEP	TROUBLE	PROBABLE CAUSE	CORRECTION
4.E(7)	Validity Test (cont'd)		
(a) (cont'd)	3 light not flashing.	(a) Q19,Q20,U8C and/or associated components defective.	Replace.
		(b) W3 broken.	Replace.
	AURAL and 1 lights off.	Q13,U8B and/or associated components defective.	Replace.
	1 light is off.	(a) Q16,Q17 and/or associated components defective.	Replace.
		(b) W8 Broken.	Replace.
	AURAL light is off.	(a) Q18 and/or associated components defective.	Replace.
		(b) W5 broken.	Replace.
(b)	Timing out of tolerance.	U8C,C9 and/or associated components defective.	Replace.
(c)	Timing out of tolerance.	C9 and/or associated components defective.	Replace.
(d)	AURAL, 1 and 3 lights are on.	U1A,CR2 and/or associated components defective.	Replace.
	3 light only is on.	(a) Q19,Q20,CR50 and/or associated components defective.	Replace.
		(b) W4 broken.	Replace.
	For Part No. 722-1799-004 only - GPWS VAL light is on.	(a) U6B,CR7,Q6 thru Q9 and/or associated components defective.	Replace.
		(b) W9 broken.	Replace.

TEST STEP	TROUBLE	PROBABLE CAUSE	CORRECTION
4.E.(7)	Validity Test (con't)		
(d) (con'd)	For Part No. 722-1799-005 only - GPWS VAL light is off.	(a) Q14,Q15,U8D and/or associated components defective.	Replace.
		(b) W9 broken.	Replace.
(f)	For Part No. 722-1799-004 only - AURAL, 1 and 3 lights are on.	U4C,U7A,CR39,U1C and/or U3A defective.	Replace.
	For Part No. 722-1799-005 only - AURAL, 1 and 3 lights are off.	(a) U1C,U3A and/or associated components defective.	Replace.
		(b) CR55 defective.	Replace.
(g)	AURAL, 1 and 3 lights are on.	CR1,U1A and/or associated components defective.	Replace.
(i)	AURAL, 1 and 3 lights are off.	U8B and/or associated components defective.	Replace.
	Timing out of tolerance.	Q9,C3 and/or associated components defective.	Replace.
4.E.(8)	Integrate Logic Test		
(a)	Voltage out of tolerance.	U5A and/or associated components defective.	Replace.
(b)	Voltage out of tolerance.	U5A defective.	Replace.
(c)	Voltage out of tolerance.	U5A and/or CR33 defective	Replace.
(d) thru (f)	Voltage out of tolerance.	U5A defective.	Replace.

TEST STEP	TROUBLE	PROBABLE CAUSE	CORRECTION
4.E.(9)	Inhibit and Validity Relay Test		
(a)	GPWS VAL light is off.	(a) U2C and/or U6C defective.	Replace.
		(b) U8D,Q14,Q15 and/or associated components defective.	Replace.
(c)	GPWS VAL light is on	CR28 defective.	Replace.
	Timing out of tolerance.	U8D,C7,R36 and/or associated components defective.	Replace.
(e)	GPWS VAL light is off.	U8D and/or associated components defective.	Replace.
	Timing out of tolerance.	C7 and/or R40 defective.	Replace.
(f)	GPWS VAL light is on.	CR29 defective.	Replace.
(h)	GPWS VAL light is on.	CR31 defective.	Replace.
(j)	GPWS VAL light is on.	Q9 and/or CR26 defective.	Replace.
(l)	GPWS VAL light is off.	CR16 and/or U2D defective.	Replace.
	Timing out of tolerance.	Q7,C3 and/or associated components defective.	Replace.
4.E.(10)	Power Monitor Test		
(a)	GPWS VAL light is on.	Q2,Q3 and/or associated components defective.	Replace.
(c)	GPWS VAL light is on.	Q4,Q5 and/or associated components defective.	Replace.
(e)	GPWS VAL light is off.	U6C,U2C and/or U2D defective.	Replace.
(f)	GPWS VAL light is off.	U6F defective.	Replace.

TEST STEP	TROUBLE	PROBABLE CAUSE	CORRECTION
4.E(11)	Take Off Relay Switch Test		
(b)	T.OFF light is on.	Q11,Q12,K1 and/or associated components defective.	Replace.
(e)	T.OFF light is off.	Q10,Q12 and/or associated components defective.	Replace.
4.E(12)	Event Recorder Monitor Test		
(a)	EVENT light is off.	Q22,Q23,U8A and/or associated components defective.	Replace.
(b)	EVENT light is on.	Q23 is defective.	Replace.
(c)	EVENT light is off.	Q6 thru Q9 and/or associated components defective.	Replace.
(e)	EVENT light is on.	CR18,U6D,CR14,U2D,U1B and/or U3B defective.	Replace.
	Timing out of tolerance.	U8A,C12 and/or associated components defective.	Replace.
(g)	EVENT light is off.	U8A,U1B,U3B and/or associated components defective.	Replace.
	Timing out of tolerance.	U8A,C12,R66 defective.	Replace.
(h)	EVENT light is on.	CR17 and/or U2C defective.	Replace.
(j)	For Part No. 722-1799-004 only - EVENT light is off.	Jumper between test fixture jacks A and K not connected.	Connect jumper.
	For Part No. 722-1799-005 only - EVENT light is on.	U1A,CR1,CR3,U8B and/or associated components defective.	Replace.

TEST STEP	TROUBLE	PROBABLE CAUSE	CORRECTION
4.E.(13)	G/S Enable Monitor Logic Test		
(a)	GS VOL light is off.	U5B and/or CR8 defective.	Replace.
(b)	GS VOL light is on.	U5B,U4A and/or U3C defective.	Replace.
(d)	GS VOL light is on.	CR11 and/or U3C defective.	Replace.
(f)	GS VOL light is on.	U5B defective.	Replace.
(g)	GS VOL light is off.	Q9 and CR9 defective.	Replace.
(h)	GS VOL light is on.	Q9 and CR9 defective.	Replace.
(i)	GS VOL light is off.	U4A and/or CR10 defective.	Replace.
(j)	GS VOL light is on.	U4A and/or CR10 defective.	Replace.
(k)	GS VOL light is on.	U4A defective.	Replace.
(l)	GS VOL light is on.	U4A defective.	Replace.
(m)	GS VOL light is off.	U1C,U3A,U3C and/or associated components defective.	Replace.
(n)	GS VOL light is on.	U3C defective.	Replace.
4.E.(14)	Internal Power Control Test		
(a)	1 light is off.	(a) U7A,CR39 defective.	Replace.
		(b) Q16,Q17 and/or associated components defective.	Replace.
(b)	1 light is on.	U7A defective.	Replace.
(c)	1 light is on.	U7A,U7B,U2A and/or associated components defective.	Replace.

TEST STEP	TROUBLE	PROBABLE CAUSE	CORRECTION
4.E.(14)	Internal Power Control Test (cont'd)		
(d)	1 light is off.	U5C and/or CR37 defective.	Replace.
(e)	1 light is on.	U5C defective.	Replace.
(f)	1 light is on	U7B defective.	Replace.
(h)	1 light is off.	CR41 defective.	Replace.
(j)	1 light is off.	U2A and/or CR38 defective.	Replace.
(k)	1 light is on.	U2A defective.	Replace.
(l)	1 light is off.	U2A defective.	Replace.

5. Comparator and Closure Warning Assembly (A2) Functional Test and Troubleshooting.

A. General

This section presents the procedures for testing and troubleshooting the comparator and closure warning assembly (A2) with Sundstrand Data Control tester, Part No. 951-0192-XXX. Unless otherwise noted in this section; all reference to controls, jack, connectors and lights, apply to the lower section of the tester.

B. Test Equipment and Power Requirements

NOTE: Test equipment substitution is permissible provided that the substituted equipment has an accuracy equal to or greater than the specified equipment.

(1) Test Equipment

The test equipment required is delineated in Fig. 125 and listed in Fig. 901.

(2) Power Requirements

Power requirements are noted in Fig. 125 and listed in Fig. 901.

C. Test Setup

NOTE: Fig. 125 Delineates the test equipment and test setup.

(1) Position tester controls as noted in para. 3.C.

(2) Connect test fixture, Part No. 649-0419-001, P2 connector to tester J2 connector and P3 connector to tester J3 connector. Secure with jackscrews. Connect test fixture J1C connector to comparator and closure warning assembly P1 connector.

(3) Connect 115 vac power source to tester 115 VAC jacks. Adjust 115 vac source for 114 to 116 vac.

(4) Connect DVM to tester METER jacks.

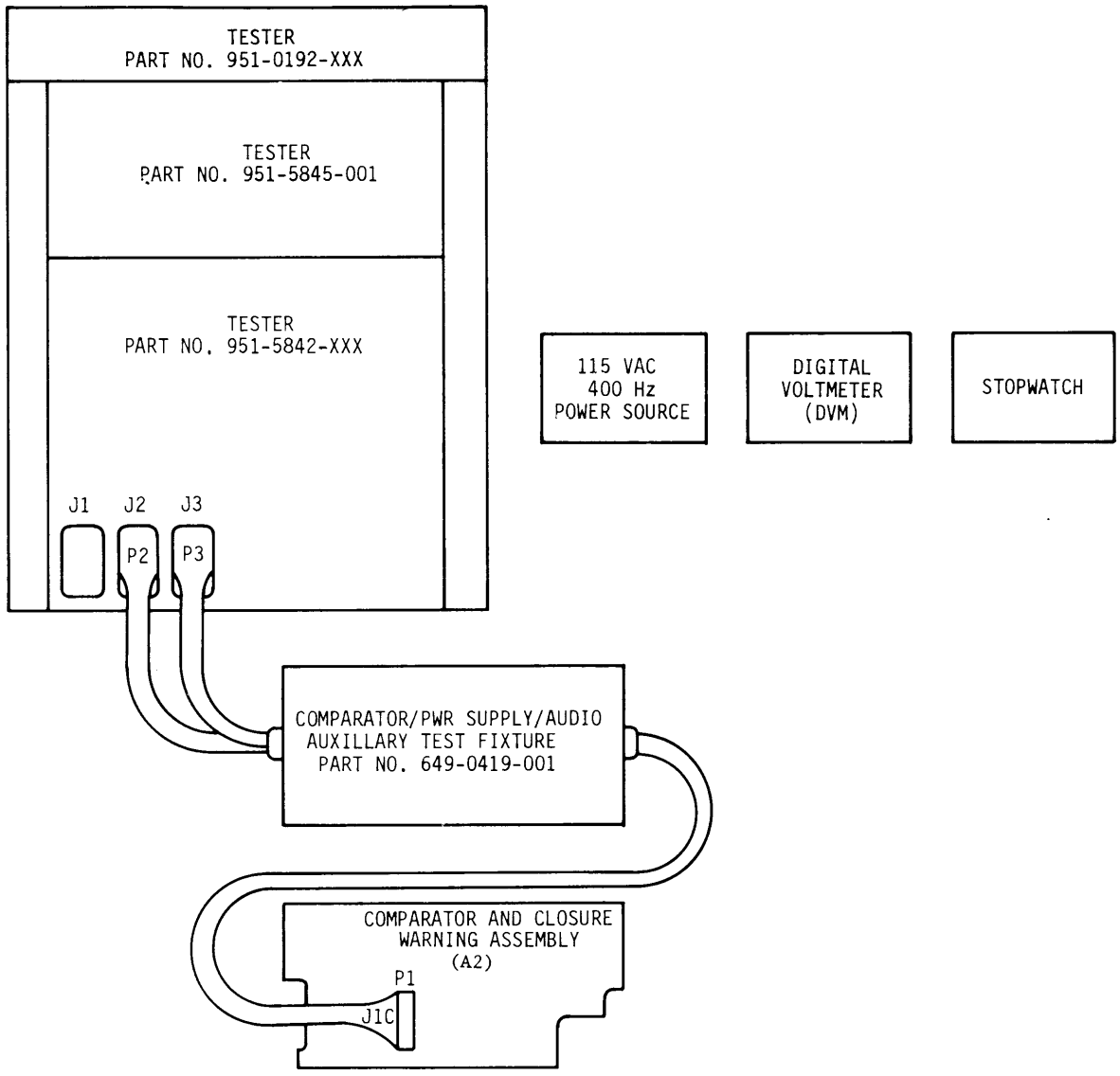

Test Setup
Figure 125

NOTE: Unless noted, disregard status of tester lights in the following steps.

D. Tester Verification

(1) Set TSTR PWR switch to ON. Verify that +28V, +15V -15V and 115V lights are on.

(2) Set INPUT switch to B and METER SELECT switch to 2. DVM shall indicate +27.0 to +31.0 vdc.

(3) Set METER SELECT switch to 3. DVM shall indicate +14.85 to +15.15 vdc.

(4) Set METER SELECT switch to 4. DVM shall indicate -14.85 to -15.15 vdc.

E. Initial Conditions (Zero Feet)

(1) Set SYN VAL switch to VAL and FLAPS switch to UP.

(2) Set INPUT switch to A and METER SELECT switch to 1. DVM shall indicate -2 to +18 mvdc.

(3) Set METER SELECT switch to 3. DVM shall indicate -0.012 to +0.004 vdc.

(4) Set METER SELECT switch to 4. DVM shall indicate +0.33 to +0.37 vdc.

(5) Set METER SELECT switch to 7. DVM shall indicate -5.980 to -6.358 vdc.

(6) Set METER SELECT switch to 9. DVM shall indicate -5 to +5 mvdc.

(7) Verify that 2450 FT, 1000 FT, 700 FT, 50 FT, TC and 200 FT lights are on; and that T.OFF, CW and SINK lights are off.

F. Functional Test

(1) Baro Gain and Take Off Mode Control Verification (300 feet).

(a) Set RADIO INPUT switch to VAR and METER SELECT switch to 2. Increase RADIO ADJ control until DVM indicates +6.39 to +6.41 vdc.

(b) Set METER SELECT switch to 1. DVM shall indicate +2.385 to +2.445 vdc.

(c) Set METER SELECT switch to 3. DVM shall indicate -1.183 to -1.233 vdc.

(d) Set METER SELECT switch to 4. DVM shall indicate +0.73 to +0.77 vdc.

(e) Set METER SELECT switch to 8. DVM shall indicate -3.074 to -3.526 vdc.

(f) Verify that TC, 50 FT and 200 FT lights are off.

(g) Set BARO INPUT switch to VAR and METER SELECT switch to 6. Decrease BARO ADJ control until DVM indicates -0.662 to -0.672 vdc.

(h) Set METER SELECT switch to 9. DVM shall indicate -0.657 to -0.677 vdc. Delay reading DVM until voltage stabilizes.

(i) Verify that TC light is on, that T.OFF light is still off five seconds after setting BARO ADJ control in step (g) and that SINK light is off.

(j) Set INT switch to ON. Verify that T.OFF light is on. T.OFF light coming on will be delayed approximately two seconds.

(k) Set METER SELECT switch to 6. Increase BARO ADJ control until DVM indicates +0.01 to +0.03 vdc. Verify that T.OFF light is off.

(l) Increase BARO ADJ control until DVM indicates +0.662 to +0.672 vdc. Set METER SELECT switch to 9. DVM shall indicate +0.657 to 0.677 vdc. Delay reading DVM until voltage stabilizes.

(2) Take Off Mode Verification (Altitude Loss-Mode 3)

(a) Set METER SELECT switch to 6. Set INT switch to OFF. Decrease BARO ADJ control until DVM indicates -0.130 to -0.140 vdc. Simultaneously set INT switch to ON and turn on stopwatch. Turn off stopwatch when T.OFF light comes on. The time shall be 8.0 to 12.5 seconds for Part No. 722-1757-004 or 7.6 to 9.4 seconds for Part No. 722-1757-005.

(b) Set INT switch to OFF. Decrease BARO ADJ control until DVM indicates -0.260 to 0.270 vdc. Set METER SELECT switch to 2. Increase RADIO ADJ control until DVM indicates +12.14 to +12.16 vdc. Simultaneously set INT switch to ON and turn on stopwatch. Turn off stopwatch when T.OFF light comes on. The time shall be 7.7 to 11.0 seconds for Part No. 722-1757-004 or 7.2 to 8.5 seconds for Part No. 722-1757-005.

(3) Terrain Clearance (TC) Mode Verification (Mode 4)

(a) Set INT switch to OFF and SYN VAL switch to $\overline{\text{VAL}}$. Increase RADIO ADJ control until DVM indicates +14.69 to +14.71 vdc. Verify that 700 FT and TC lights are off.

(b) Decrease RADIO ADJ control until TC light comes on. DVM shall indicate +9.931 to +10.445 vdc for Part No. 722-1757-004 or +10.438 to +10.980 vdc for Part No. 722-1757-005.

(c) Set SYN VAL switch to VAL. Verify that TC light is off.

(d) Decrease RADIO ADJ control until TC light comes on. DVM shall indicate +4.307 to +4.671 vdc for Part No. 722-1757-004 or +4.310 to +4.628 vdc for Part No. 722-1757-005.

(e) Set BARO INPUT switch to GND and SELF TEST switch to ON. Verify that TC light is off.

(f) Decrease RADIO ADJ control until TC light comes on. DVM shall indicate +2.352 to +2.717 vdc for Part No. 722-1757-004 or +3.174 to +3.544 vdc for Part No. 722-1757-005. Note actual voltage.

(g) Increase RADIO ADJ control until TC light goes off. DVM shall indicate +0.2 to +0.4 vdc more positive than voltage noted in step (f).

(h) Set BARO INPUT to VAR and METER SELECT switch to 6. Decrease BARO ADJ control until DVM indicates -0.462 to -0.472 vdc. Verify that TC light is on for Part No. 722-1757-004 or off for 722-1757-005. Set SELF TEST switch to OFF.

(i) Set METER SELECT switch to 2. Increase RADIO ADJ control until TC light goes off. Decrease RADIO ADJ control until TC light comes on. DVM shall indicate +4.801 to +5.233 vdc for Part No. 722-1757-004 or +5.027 to +5.477 vdc for Part No. 722-1757-005.

(j) Set METER SELECT switch to 6. Decrease BARO ADJ control until DVM indicate -0.862 to -0.872 vdc. Set METER SELECT switch to 2. Increase RADIO ADJ control until TC light goes off. Decrease RADIO ADJ control until TC light comes on. DVM shall indicate +8.731 to +9.399 vdc for Part No. 722-1757-004 or +9.660 to +10.276 vdc for Part No. 722-1757-005.

(4) Sinkrate Verification (Mode 1)

(a) Set METER SELECT switch to 6. Decrease BARO ADJ control until DVM indicates -0.995 to -1.005 vdc. Set METER SELECT switch to 2. Decrease RADIO ADJ control until SINK light comes on. DVM shall indicate +3.995 to +5.561 vdc for Part No. 722-1757-004 or +4.128 to +5.248 vdc for Part No. 722-1757-005. Note actual voltage.

(b) Increase RADIO ADJ control until SINK light goes off. DVM shall indicate +0.14 to +0.42 vdc more positive than voltage noted in step (a).

(c) Set METER SELECT switch to 6. Decrease BARO ADJ control until DVM indicate -1.462 to -1.472 vdc. Set METER SELECT switch to 2. Increase RADIO ADJ control until DVM indicates +18.06 to +18.08 vdc. Set METER SELECT switch to 3. DVM shall indicate -4.287 to -4.523 vdc.

(d) Decrease RADIO ADJ control until SINK light comes on. Set METER SELECT switch to 2. DVM shall indicate +16.361 to +17.391 vdc for Part No. 722-1757-004 or +16.338 to +17.320 vdc for Part No. 722-1757-005.

(e) Set METER SELECT switch to 6. Decrease BARO ADJ control until DVM indicates -1.995 to -2.005 vdc. Set METER SELECT switch to 2. Increase RADIO ADJ control until DVM indicates +21.75 to +21.77 vdc. Set METER SELECT switch to 3. DVM shall indicate -6.196 to -6.596 vdc.

(f) Verify that 1000 FT light is off.

(g) Decrease RADIO ADJ control until SINK light comes on. Set METER SELECT switch to 2. DVM shall indicate +20.716 to 21.534 vdc for Part No. 722-1757-004 or +20.711 to +21.516 vdc for Part No. 722-1757-005.

(h) Set METER SELECT switch to 6. Decrease BARO ADJ control until DVM indicate -2.995 to -3.005 vdc. Set METER SELECT switch to 2. Increase RADIO ADJ control until DVM indicate +25.55 to +25.57 vdc. Set METER SELECT switch to 3. DVM shall indicate -9.845 to -9.143 vdc.

(i) Decrease RADIO ADJ control until SINK light comes on. Set METER SELECT switch to 2. DVM shall indicate +24.365 to +25.490 vdc for Part No. 722-1757-004 or +24.634 to +25.479 vdc for Part No. 722-1757-005.

(5) Radio Altitude Comparator Verifications

(a) Set BARO INPUT switch to GND. Increase RADIO ADJ control until 2450 FT light goes off. Decrease RADIO ADJ control until 2450 FT light comes on. DVM shall indicate +25.574 to +26.524 vdc. Note actual voltage.

(b) Increase RADIO ADJ control until 2450 FT light goes off. DVM shall indicate +0.087 to +0.263 vdc more positive than voltage noted in step (a).

(c) Decrease RADIO ADJ control until 1000 FT light comes on. DVM shall indicate +16.945 to +17.565 vdc. Note actual voltage.

(d) Increase RADIO ADJ control until 1000 FT light goes off. DVM shall indicate +0.22 to +0.67 vdc more positive than voltage noted in step (c).

(e) Decrease RADIO ADJ control until 700 FT light comes on. DVM shall indicate +12.724 to +13.286 vdc. Note actual voltage.

(f) Increase RADIO ADJ control until 700 FT light goes off. DVM shall indicate +0.33 to +1.00 vdc more positive than voltage noted in step (e).

(g) Set SELF TEST switch to ON. Decrease RADIO ADJ control until 200 FT light comes on. DVM shall indicate +4.266 to +4.504 vdc. Note actual voltage.

(h) Increase RADIO ADJ control until 200 FT light goes off. DVM shall indicate +0.5 to +1.5 vdc more positive than voltage noted in step (g).

(i) Set SELF TEST switch to OFF. Decrease RADIO ADJ control until 50 FT light comes on. DVM shall indicate +1.304 to +1.444 vdc. Note actual voltage.

(j) Increase RADIO ADJ control until 50 FT light goes off. DVM shall indicate +0.50 to +0.90 vdc more positive than voltage noted in step (i).

(6) Closure Warning Bias and Time Constant Verification (Mode 2)

(a) Increase RADIO ADJ control until 700 FT light just goes off. Set FLAPS switch to DOWN and METER SELECT switch to 8. DVM shall indicate -0.187 to +0.347 vdc.

(b) Set SYN VAL switch to $\overline{\text{VAL}}$, INPUT switch to B, METER SELECT switch to 17, TEST SIGNAL SELECT switch to B and TEST SIGNAL ON/OFF switch to ON. Increase TEST SIGNAL ADJ control until DVM indicates +3.19 to +3.21 vdc. Set INPUT switch to A and METER SELECT switch to 7. DVM shall indicate +2.186 to +2.614 vdc. Delay reading DVM until voltage stabilizes.

(c) Verify that CW light is off.

(d) Set SYN VAL switch to VAL. DVM shall indicate +3.137 to +3.519 vdc. Delay reading DVM until voltage stabilizes.

(e) Verify that CW light is on.

(7) Radio Rate Circuit Verification

(a) Set TEST SIGNAL SELECT switch to C and METER SELECT switch to 4. Decrease TEST SIGNAL ADJ control until DVM indicates -0.01 to +0.01 vdc. Set INPUT switch to B and METER SELECT switch to 17. DVM shall indicate +2.009 to +2.107 vdc.

(b) Set FLAPS switch to UP, INPUT switch to A and METER SELECT switch to 4. Decrease TEST SIGNAL ADJ control until DVM indicates -0.01 to +0.01 vdc. Set INPUT switch to B and METER SELECT switch to 17. DVM shall indicate +1.315 to +1.381 vdc.

(c) Decrease RADIO ADJ control until 200 FT light comes on. Set INPUT switch to A and METER SELECT switch to 4. DVM shall indicate -0.631 to -0.663 vdc.

(d) Decrease TEST SIGNAL ADJ control until DVM indicates -0.01 to +0.01 vdc. Set INPUT switch to B and METER SELECT switch to 17. DVM shall indicate +0.336 to +0.364 vdc.

(8) Closure Warning (CW) Comparator Verification

(a) Set FLAPS switch to DOWN, LIMIT switch to GND, TEST SIGNAL SELECT switch to B, INPUT switch to A and METER SELECT switch to 7. Increase TEST SIGNAL ADJ control until DVM indicates +2.99 to +3.01 vdc.

NOTE: A seven second filter circuit within the assembly under test will require the TEST SIGNAL ADJ control be advanced in small increments and then wait for the voltage to stabilize. Continue to advance the control in small increments until the DVM indicates +2.99 to +3.01 vdc.

Set METER SELECT switch to 3 and increase RADIO ADJ control until CW light goes off.

(b) Decrease RADIO ADJ control very slowly until CW light comes on. DVM shall indicate -2.925 to -3.055 vdc. Note actual voltage.

(c) Increase RADIO ADJ control until CW light goes off. DVM shall indicate -20 to -60 mvdc more negative than voltage noted in step (b). If out of tolerance, repeat steps (a) through (c).

(9) Verification of Baro Rate Part of Closure Warning

(a) Set TEST SIGNAL ON/OFF switch to OFF and LIMIT switch to OPEN. Decrease RADIO ADJ control until DVM indicates -1.49 to -1.51 vdc for Part No. 722-1757-004 or -0.79 to -0.81 vdc for Part No. 722-1757-005. Set BARO INPUT switch to VAR and METER SELECT switch to 6. Adjust BARO ADJ control, if required, for a DVM indication of -2.99 to -3.01 vdc for Part No. 722-1757-004 or -2.995 to -3.005 vdc for Part No. 722-1757-005. Set BARO INPUT switch to GND and SYN VAL switch to VAL. Set METER SELECT switch to 7. DVM shall indicate -0.2 to +0.4 vdc. Delay Proceeding until DVM indication is somewhere within limits shown.

(b) Set BARO INPUT switch to VAR. Verify that CW light remains off for two seconds minimum after BARO INPUT switch is set to VAR.

(c) Set BARO INPUT switch to GND, TEST switch to ON and METER SELECT switch to 3. Delay proceeding until voltage has stabilized. Set RADIO INPUT to RAMP and adjust RADIO ADJ control for a DVM indication of -0.79 to -0.81 vdc for Part No. 722-1757-004 or -0.89 to -0.91 for Part No. 722-1757-005.

(d) Set METER SELECT switch to 7. DVM shall indicate -0.2 to +0.4 vdc. Delay proceeding until voltage has stabilized.

(e) Simultaneously set BARO INPUT switch to VAR and turn on stop watch. Turn off stopwatch when CW light goes off after first coming on. The time shall be 2.0 to 8.0 seconds.

(f) Set RADIO INPUT switch to FIXED and METER SELECT switch to 1. DVM shall indicate +1.180 to +1.968 vdc.

(10) For comparator and closure warning assembly, Part No. 722-1757-004, proceed to step (14).

(11) For comparator and closure warning assembly, Part No. 722-1757-005, proceed to step (12).

(12) Program Sinkrate (Turbo-Prop)

(a) Set RADIO INPUT switch to VAR, TEST switch to OFF, SYN VAL switch to VAL, SELF TEST switch to ON and METER SELECT switch to 2. Increase RADIO ADJ control until SINK light goes off. Decrease RADIO ADJ control until SINK light comes on. DVM shall indicate +24.048 to +24.906 vdc.

(b) Set METER SELECT switch to 6. Increase BARO ADJ control until DVM indicates -1.995 to -2.005 vdc. Set METER SELECT switch to 2. Delay six seconds minimum before proceeding. Decrease RADIO ADJ control until SINK light comes on. DVM shall indicate +19.732 to +20.608 vdc.

(c) Set METER SELECT switch to 6. Increase BARO ADJ control until DVM indicates -1.662 to -1.672 vdc. Set METER SELECT switch to 2. Delay six seconds minimum before proceeding. Decrease RADIO ADJ control until SINK light comes on. DVM shall indicate +16.687 to +17.732 vdc.

(d) Set METER SELECT switch to 6. Increase BARO ADJ control until DVM indicate -1.195 to -1.205 vdc. Set METER SELECT switch to 2. Delay six seconds minimum before proceeding. Decrease RADIO ADJ control until SINK light comes on. DVM shall indicate +4.720 to +6.132 vdc.

(13) Mode 4 Program (Turbo-Prop)

(a) Increase RADIO ADJ control until TC light goes off. Decrease RADIO ADJ control until TC light comes on. DVM shall indicate +9.669 vdc nominal. Actual value shall be determined during calibration of top assembly.

(b) Set METER SELECT switch to 6. Increase BARO ADJ control until DVM indicates -0.962 to -0.992 vdc. Set METER SELECT switch to 2. Delay six seconds minimum before proceeding. Decrease RADIO ADJ control until TC light comes on. DVM shall indicate +5.511 vdc nominal. Actual value shall be determined during calibration of top assembly.

(14) Set TSTR PWR switch to OFF. Disconnect comparator and closure warning assembly from test setup.

G. Troubleshooting

Troubleshooting procedures (Ref. Fig. 126) indicate the most probable trouble areas for various malfunctions, their probable cause and correction.

TEST STEP	TROUBLE	PROBABLE CAUSE	CORRECTION
5.D.	Tester Verifcation		
(1)	All tester lights off.	(a) Blown tester fuse F1.	Replace fuse.
		(b) Loss of tester 115 vac input.	Connect tester to 115 vac power source.
		(c) Tester defective.	Repair.
	Tester TSTR PWR 115V light only is on.	(a) Blown internal tester fuse on +24 vdc light supply.	Replace.
		(b) Tester defective.	Repair.
	Any one tester light only is off.	See below.	
	Proceed to test setp 5.D.(2) and repair as indicated below.		
	Voltage within tolerance.	(a) Defective lamp.	Replace.
		(b) Tester defective.	Repair.
(2) (3) (4)	Voltage out of tolerance.	(a) Tester defective.	Repair.
		(b) Excessive load (+15 vdc)	Isolate short on assembly under test.
5.E.	Initial Conditions (Zero Feet)		
(2)	Voltage out of tolerance.	Radio altitude incorrect, see below.	
	Set METER SELECT switch to 2. DVM shall indicate +0.390 to +0.410 vdc.		
	Voltage out of tolerance.	Tester defective.	Repair.
	Voltage in tolerance.	(a) Radio input buffer U6A and/or associated components defective.	Replace.
		(b) Radio Self test circuit components, CR9 shorted, Q3 open or U4B not 0.00 ± 0.01 vdc. U4B associated components defective.	Replace.

TEST STEP	TROUBLE	PROBABLE CAUSE	CORRECTION
5.E.	Initial Conditions (Zero Feet) (cont'd)		
(3)	Voltage out of tolerance.	(a) Variable gain circuit U4-D,U7A,Q4 or associated components defective.	Replace.
		(b) Linearizer amplifier U7A or associated components defective.	Replace.
(4)	Voltage out of tolerance.	See below.	
	Verify status of 200 FT light.		
	Light is off.	200 foot comparator U5B or associated components defective.	Replace.
	Light is on.	See below.	
	Set RADIO INPUT switch to VAR, METER SELECT switch to 2. Increase RADIO ADJ control until DVM indicates +6.69 to +6.41 vdc. Set METER SELECT to 8. DVM shall indicate -3.074 to -3.526 vdc.		
	Voltage out of tolerance.	Bias circuit Q6,Q7,R161, R102,R103 or R52 defective.	Replace.
	Voltage in tolerance	(a) Flaps down <200 feet bias U6B,Q6,R100 or associated components defective.	Replace.
		(b) Limiter circuit AR2, R48,R49 or associated components defective.	Replace.
(5)	Voltage out of tolerance.	Closure bias U2C,R53,R96, R97,R51,AR3 or associated components defective.	Replace.
(6)	Voltage out of tolerance.	Baro No. 2 amplifier AR1 or R28 defective.	Replace.
(7)	2450 FT light is off.	See below.	
	Set METER SELECT switch to 19. DVM shall indicate +12 vdc minimum.		
	Voltage in tolerance.	Tester defective.	Replace lamp and/or repair tester.

TEST STEP	TROUBLE	PROBABLE CAUSE	CORRECTION
5.E.	Initial Conditions (Zero Feet) (cont'd)		
(7) (cont'd)	Voltage out of tolerance.	2450 FT comparator U6-D or associated components defective.	Replace.
	1000 FT light is off.	See below.	
	Set METER SELECT switch to 18. DVM shall indicate +12 vdc minmum.		
	Voltage out of tolerance.	Tester defective.	Replace lamp and/or repair tester.
	Voltage out of tolerance.	1000 FT comparator U5A or associated components defective.	Replace.
	700 FT light is off.	See below.	
	Set METER SELECT switch to 17. DVM shall indicate +12 vdc minimum.		
	Voltage in tolerance.	Tester defective.	Replace lamp and/or repair tester.
	Voltage out of tolerance.	700 FT comparator U5C or associated components defective.	Replace.
	TC light is off.	See below.	
	Set METER SELECT switch to 15. DVM shall indicate +12 vdc minimum.		
	Voltage in tolerance.	Tester defective.	Replace lamp and/or repair tester.
	Voltage out of tolerance.	TC comparator R123,U3D or associated components defective.	Replace.
	50 FT light is off.	See below.	
	Set METER SELECT switch to 14. DVM shall indicate +12 vdc minimum.		
	Voltage in tolerance.	Tester defective.	Replace lamp and/or repair tester.

TEST STEP	TROUBLE	PROBABLE CAUSE	CORRECTION
5.E.	Initial Conditions (Zero Feet) (cont'd)		
(7) (cont'd)	Voltage out of tolerance.	50 FT comparator CR20, U5D or associated components defective.	Replace.
	T.OFF light is on.	See below.	
	Set METER SELECT switch to 22. DVM shall indicate -0.1 to +0.1 vdc.		
	Voltage in tolerance.	T.OFF comparator CR6,U1B or associated components defective.	Replace.
	Voltage out of tolerance.	T.OFF integrator Q1,U1C, U1D or associated components defective.	Replace.
	SINK light is on.	(a) Sinkrate bias circuit U2D or associated components defective.	Replace.
		(b) Sinkrate comparator U2B or associated components defective.	Replace.
	CW light is on.	Closure warning comparator U3C or associated components defective.	Replace.
	200 FT light is off.	Tester defective.	Replace lamp and/or repair tester.
5.F.(1)	Baro Gain and Take Off Mode Control Verification (300 Feet)		
(b)	Voltage out of tolerance.	Radio input buffer U4A or associated components defective.	Replace.
(c)	Voltage out of tolerance.	(a) Variable gain circuit R65 or R66 defective.	Replace.
		(b) Linearizer amplifier U7A or associated components defective.	Replace.

TEST STEP	TROUBLE	PROBABLE CAUSE	CORRECTION
5.F.(1)	Baro Gain and Take Off Mode Control Verification (300 Feet)(cont'd)		
(d)	Voltage out of tolerance.	See below.	
	Verify status of 200 FT light.		
	Light is on.	200 FT comparator U5B or associated components defective.	Replace.
	Light is off.	Limiter circuit R150,CR13 thru CR16 or R95 defective.	Replace.
(e)	Voltage out of tolerance.	Closure bias Q6,R161,R102 or R103 defective.	Replace.
(f)	TC light is on.	(a) TC bias circuit U3A,CR26 thru CR29, R123,R128 or R119 defective.	Replace.
		(b) TC comparator U3D or associated components defective.	Replace.
	50 FT light is on.	50 FT comparator U5D or associated components defective.	Replace.
	200 FT light is on.	200 FT comparator U5B or associated components defective.	Replace.
(h)	Voltage out of tolerance.	Baro No. 2 amplifier C3 or AR1 defective.	Replace.
(i)	TC light is off.	TC bias circuit R120,R119, CR17 or U3A defective.	Replace.
	T.OFF light is on.	T.OFF integrate control circuit CR2,CR4,CR32 or R13 defective.	Replace.
	SINK light is on.	Sinkrate bias circuit R16,R62 or R65 defective.	Replace.

TEST STEP	TROUBLE	PROBABLE CAUSE	CORRECTION
5.F.(1)	Baro Gain and Take Off Mode Control Verification (300 Feet)(cont'd)		
(j)	T.OFF light remains off.	See below.	
	Set METER SELECT switch to 22. DVM shall indicate a voltage more negative than -2.00 vdc. Note voltage may be moving toward -11.00 vdc.		
	Voltage out of tolerance.	T.OFF integrator circuit Q1,U1C or associated components defective.	Replace.
	Voltage in tolerance.	See below.	
	Set METER SELECT switch to 21. DVM shall indicate +12.00 vdc minimum.		
	Voltage in tolerance.	Tester defective.	Replace lamp and/or repair tester.
	Voltage out of tolerance.	(a) T.OFF comparator U1B or associated components defective.	Replace.
		(b) T.OFF override U1A or associated components defective.	Replace.
(k)	T.OFF remains on.	T.OFF override (+FPM) U1A or CR6 defective.	Replace.
(l)	Voltage out of tolerance.	Baro No. 2 amplifier AR1 defective.	Replace.
5.F.(2)	Take Off Mode Verification (Altitude Loss Mode 3)		
(a)	Timing out of tolerance.	T.OFF integrator circuit R15,C1 or U1D defective.	Replace.
(b)	Timing out of tolerance.	T.OFF comparator circuit R21 thru R24 or U1B defective.	Replace.

TEST STEP	TROUBLE	PROBABLE CAUSE	CORRECTION
5.F.(3)	Terrain Clearance (TC) Mode Verification (Mode 4)		
(a)	700 Ft light is on.	700 FT comparator U5C or associated components defective.	Replace.
	TC light is on.	TC bias circuit CR17,CR26 thru CR29 or R162 defective.	Replace.
(b)	Voltage out of tolerance.	(a) TC bias circuit CR26 thru CR29,R162 or R123 defective.	Replace.
		(b) TC comparator U3D or associated components defective.	Replace.
(c)	TC light is on.	TC bias circuit U3A or associated components defective.	Replace.
(d)	Voltage out of tolerance.	TC bias circuit CR26 thru CR29,R128 or Q9 defective.	Replace.
(e)	TC light is on.	Mode 4 program switch CR30,R128 or associated components defective.	Replace.
(f)	Voltage out of tolerance.	Mode 4 program switch R129 and/or Q9 defective.	Replace.
(g)	Voltage out of tolerance.	TC hysterisis circuit R126,Q3D and/or associated components defective.	Replace.
(h) (i) (j)	TC light is off and/or voltage out of tolerance.	TC bias curcuit R120,R119 and/or R122 defective.	Replace.
		For Part No. 722-1757-004 only - Wire E7 and/or E8 broken.	Replace.
		For Part No. 722-1757-005 only - Mode 4 program circuit A2Q1,A2Q3, and/or A2R7 defective.	Replace.

TEST STEP	TROUBLE	PROBABLE CAUSE	CORRECTION
5.F.(4)	Sinkrate Verification (Mode 1)		
(a)	Voltage out of tolerance.	See below.	
	Set METER SELECT switch to 20. DVM shall indicate +12 vdc minimum.		
	Voltage in tolerance.	Tester defective.	Check lamp and/ or repair tester.
	Voltage out of tolerance.	(a) Sinkrate bias circuit U2D or associated components defective.	Replace.
		(b) Sinkrate comparator U2B or associated components defective.	Replace.
		For Part No. 722-1757-004 only - wire E6 and/or E10 broken.	Replace.
		For Part No. 722-1757-005 only - Sinkrate program circuit A2Q4,Q2R12,A2R13 and/or A2R14 defective.	Replace.
(b)	Voltage out of tolerance.	Sinkrate hysterisis circuit R163,R68 or U2B defective.	Replace.
(c)	Voltage out of tolerance.	Variable gain circuit Q4,Q5,U4D,U7B or associated components defective.	Replace.
(d)	Voltage out of tolerance.	Sinkrate bias circuit R63,R64 or CR7 defective.	Replace.
(e)	Voltage out of tolerance.	Variable gain circuit Q4, Q5,U4D,U7B or associated components defective.	Replace.
(f)	1000 FT light is on.	1000 FT comparator U5A or associated components defective.	Replace.

TEST STEP	TROUBLE	PROBABLE CAUSE	CORRECTION
5.F.(4)	Sinkrate Verification (Mode 1) (cont'd)		
(g)	Voltage out of tolerance.	Sinkrate bias circuit R63,R64 or CR7 defective.	Replace.
(h)	Voltage out of tolerance.	Variable gain circuit Q4, Q5,U4D,U7B or associated components defective.	Replace.
(i)	Voltage out of tolerance.	Sinkrate bias circuit R63,R64 or CR7 defective.	Replace.
5.F.(5)	Radio Altitude Comparator Verifications		
(a)	Voltage out of tolerance.	2450 FT comparator circuit R155,R156,U6D or associated components defective.	Replace.
(b)	Voltage out of tolerance.	2450 FT hysterisis circuit R157,R158 or R159 defective.	Replace.
(c)	Voltage out of tolerance.	1000 FT comparator circuit R150,R151,U5A or associated components defective.	Replace.
(d)	Voltage out of tolerance.	1000 FT hysterisis circuit R152,R153 or R154 defective.	Replace.
(e)	Voltage out of tolerance.	700 FT comparator circuit R145,R146,U5C or associated components defective.	Replace.
(f)	Voltage out of tolerance.	700 FT hysterisis circuit R147,R148 or R149 defective.	Replace.
(g)	Voltage out of tolerance.	200 FT comparator circuit R140,R141,U5B or associated components defective.	Replace.

TEST STEP	TROUBLE	PROBABLE CAUSE	CORRECTION
5.F.(5)	Radio Altitude Comparator Verifications (cont'd)		
(h)	Voltage out of tolerance.	200 FT hysterisis circuit R142,R143 or R144 defective.	Replace.
(i)	Voltage out of tolerance.	50 FT comparator circuit R135,R136,CR20, U5D or associated components defective.	Replace.
(j)	Voltage out of tolerance.	50 FT hysterisis circuit R137,R138 or R139 defective.	Replace.
5.F.(6)	Closure Warning Bias and Time Constant Verification (Mode 2)		
(a)	Voltage out of tolerance.	Closure bias circuit R161, R103 or R52 defective.	Replace.
(b)	Voltage out of tolerance.	Time constant switch circuit Q8,R105 or R60 defective.	Replace.
(c)	CW light is on.	CW comparator U3C or associated components defective.	Replace.
(d)	Voltage out of tolerance.	Time constant switch circuit Q8,R105,R59 or R60 defective.	Replace.
(e)	CW light is off.	See below.	
	Set METER SELECT switch to 23. DVM shall indicate 0.0 ± 1.0 vdc.		
	Voltage in tolerance.	Tester defective.	Check lamp and/ or repair tester.
	Voltage out of tolerance.	CW comparator U3C or associated components defective.	Replace.
5.F.(7)	Radio Rate Circuit Verification		
(a)	Voltage won't hold.	Test signal R46 or R47 defective.	Replace.

TEST STEP	TROUBLE	PROBABLE CAUSE	CORRECTION
5.F.(7)	Radio Rate Circuit Verification (cont'd)		
(a) (cont'd)	Voltage out of tolerance.	CW bias circuit R47,R49 R161 or R103 defective.	Replace.
(b)	Voltage out of tolerance.	CW bias circuit R102 or Q7 defective.	Replace.
(c)	Voltage out of tolerance.	Radio limiter CR13 thru CR16 or R94 defective.	Replace.
(d)	Voltage out of tolerance.	CW bias circuit R100 or Q6 defective.	Replace.
5.F.(8)	Closure Warning (CW) Comparator Verification		
(b)	Voltage out of tolerance.	CW comparator circuit R73 R74, or U3C defective.	Replace.
(c)	Voltage out of tolerance.	CW hysterisis circuit R77, R78,R81 or R164 defective.	Replace.
5.F.(9)	Verification of Baro Rate Part of Closure Warning		
(b)	CW light is on.	Baro attenuator Q2 defective.	Replace.
(e)	Timing out of tolerance.	(a) Baro #2 time constant circuit R26 and C3 defective.	Replace.
		(b) Closure time constant C8 defective.	
		(c) Baro attenuator circuit Q2,U3B and/or associated components defective.	Replace.
(f)	Voltage out of tolerance.	Radio self test circuit CR9,Q3,U4B and/or associated components defective.	Replace.

TEST STEP	TROUBLE	PROBABLE CAUSE	CORRECTION
5.F.(12)	Program Sinkrate (Turbo-Prop)		
(a)	Voltage out of tolerance.	(a) Wire E1 broken.	Replace.
		(b) Sinkrate program circuit A2Q1,Q2Q4, A2R1 and/or A2R3 defective.	Replace.
(b) thru (d)	Voltage out of tolerance.	Sinkrate program circuit A2R12,A2R13 and/or A2R14 defective.	Replace.
5.F.(13)	Mode 4 Program (Turbo-Prop)		
(a)	Voltage within range of +10.438 to +10.980 vdc.	(a) Wire E5 broken.	Replace.
		(b) Mode 4 program circuit - A2Q3 defective.	Replace.
	Voltage within range of +3.0 to +3.6 vdc.	Wire E9 broken.	Replace.
	Voltage other than within the two ranges above.	See below.	

Voltage shown functional test is nominal and is given for reference only. Mode 4 program circuit is calibrated in top assembly GPWC to compensate for three different error sources:

1. TC comparator on this comparator assembly.
2. ±15 vdc power supplies on power supply assembly.
3. Baro rate signal on audio assembly.

After top assembly calibration, voltage measurement at comparator assembly level will shift due to changes in ±15 vdc power from tester and changes in baro rate signal from tester.

6. Audio Assembly (A3) Functional Test,Calibration and Troubleshooting

A. General

This section presents the procedures for testing, calibrating and troubleshooting the audio assembly (A3) with Sundstrand Data Control tester, Part No. 951-0192-XXX. Unless otherwise noted in this section; all references to controls, jacks connectors and lights apply to the lower section of the tester.

B. Test Equipment and Power Requirements

NOTE: Test equipment substitution is permissible provided that the substituted equipment has an accuracy equal to or greater than the specified equipment.

(1) Test Equipment

The test equipment required is delineated in Fig. 127 and listed in Fig. 901.

(2) Power Requirements

Power requirements are noted in Fig. 127 and listed in Fig. 901.

C. Test Setup

NOTE: Fig. 127 delineates the test equipment required and test setup.

(1) Position controls as noted in para. 3.C. except set 700 FT switch to <700 and 50 FT switch to <50.

(2) Connect test fixture, Part No. 649-0419-001, P2 connector to tester J2 BOARDS connector and P3 connector to tester J3 ATE connector. Secure connectors with jack screws.

(3) Connect test fixture, Part No. 649-0419-001, J1A connector to audio assembly P1 connector and J2A to audio assembly P2 connector.

(4) Connect 115 vac power source to tester 115 VAC jacks. Adjust the 115 vac source for 115 ±1 vac.

(5) Connect DVM to tester METER jacks, and oscilloscope vertical input to tester SCOPE jacks.

NOTE: Lights not referred to in any step of the following steps may be either on or off.

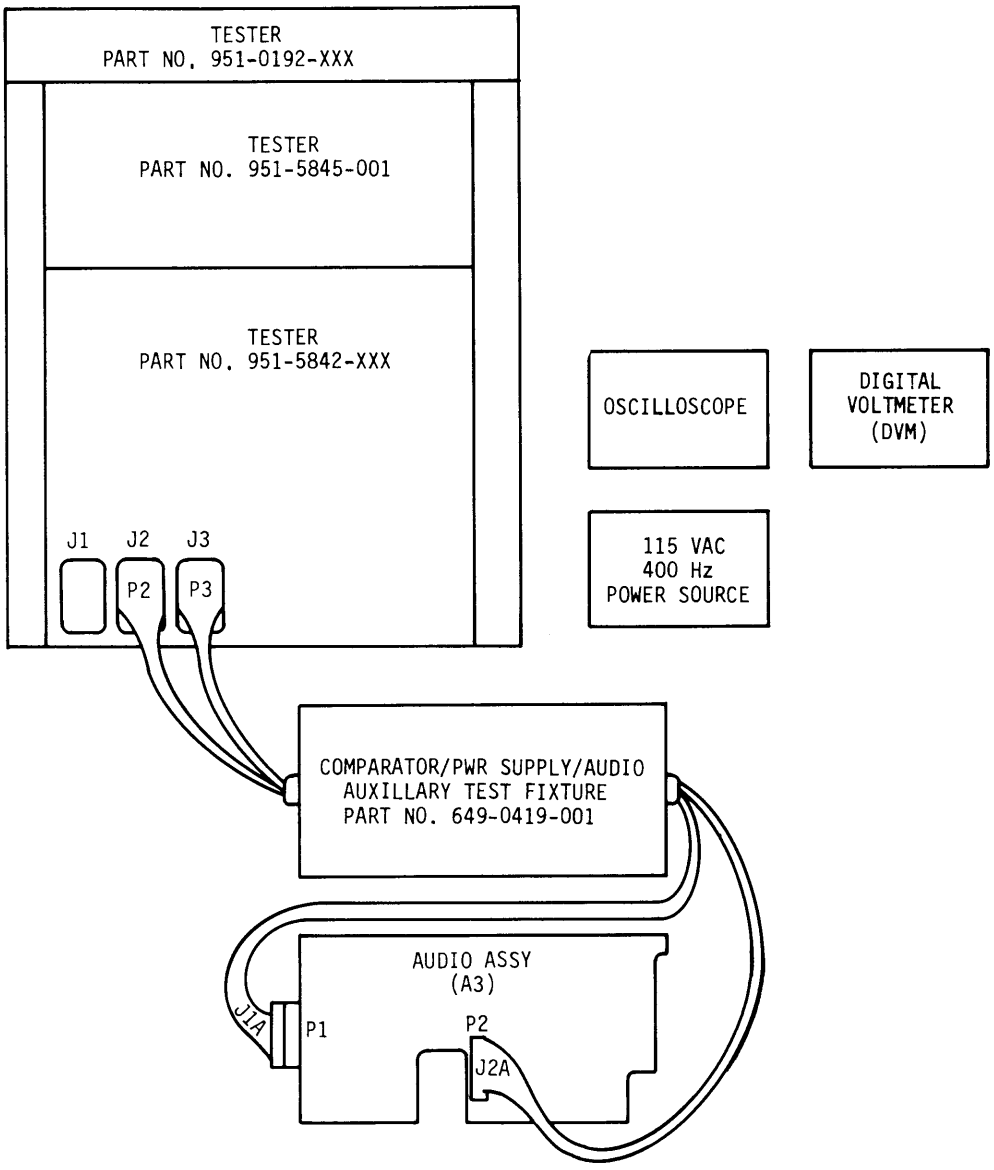

Test Setup
Figure 127

D. Tester Verification

CAUTION: "COMP PWR" SWITCH SHALL BE SET TO "ON" BEFORE "TSTR PWR" SWITCH IS SET TO "ON" TO AVOID DAMAGE TO ASSEMBLY UNDER TEST AND TESTER.

(1) Set COMP PWR switch to ON and then set TSTR PWR switch to ON. Verify that +28V,+15V, -15V and two 115V lights are on.

(2) Set FUNCT switch to AC.

(3) Set INPUT switch to B and METER SELECT switch to 1. DVM shall indicate 114 to 116 vac. If not, adjust COMP 115 VAC INPUT control for 114 to 116 vac. External power source may have to be increased. If so, do not exceed 120 vac.

(4) Set FUNCT switch to DC.

(5) Set METER SELECT switch to 2. DVM shall indicate +24 to +30 vdc.

(6) Set METER SELECT switch to 3. DVM shall indicate +14.85 to +15.15 vdc.

(7) Set METER SELECT switch to 4. DVM shall indicate -14.85 to -15.15 vdc.

(8) Move DVM HI lead from tester jack to test fixture P1-7 (-24 vdc) jack. DVM shall indicate -24 to -30 vdc.

(9) Return DVM HI lead to tester HI jack.

E. Functional Test

NOTE: References to test fixture P1 and P2 in the following test steps are: P1 is jacks 1 through 30 and P2 is jacks 1 through 15 of the AUDIO section of the test fixture.

(1) Baro Validity Test

NOTE: In steps (a) through (i), change of status of BARO light will be delayed approximately five seconds.

(a) Set SYN VAL switch to VAL. Verify that BARO light is off.

(b) Set CADC switch to $\overline{\text{VAL}}$ and SYN VAL switch to $\overline{\text{VAL}}$. Verify that BARO light comes on.

(c) Connect oscilloscope trigger to test fixture P1-11 (Synchro Validity) jack and vertical input (+) to P2-15 (Baro Inhibit) jack. Set vertical input to 5 volts/div., trigger slope to

positive and horizontal selector to 0.5 seconds/div.

(d) Set SYN VAL switch to VAL. Verify that BARO light goes off. Scope display shall delay 2.5 to 3.5 seconds before going to approximately +14 vdc after setting SYN VAL switch to VAL.

(e) Set CADC switch to VAL and SYN VAL switch to $\overline{\text{VAL}}$. Verify that BARO light comes on.

(f) Set SYN VAL switch to VAL. Verify that BARO light goes off.

(g) Set ACREF switch to OPEN. Verify that BARO light comes on.

(h) Set BARO MON switch to OFF. Verify that BARO light is on.

(i) Set ACREF switch to LO. Verify that BARO light is on.

(j) Set BARO MON switch to ON.

(2) DC Baro Test

(a) Set INPUT switch to A, METER SELECT switch to 10 (P2-1, AC Baro Rate), BARO FUNCTION switch to DC and BARO INPUT switch to GND. DVM shall indicate -40 to +40 mvdc.

(b) Set METER SELECT switch to 5 (P2-2, Baro Rate No. 1). DVM shall indicate -40 to +40 mvdc.

(c) Set METER SELECT switch to 6 (P1-16, DC Signal Input) and BARO INPUT switch to VAR.

(d) Adjust BARO ADJ control for a DVM indication of -0.995 to -1.005 vdc. BARO ADJ control must remain below 5.0.

(e) Set METER SELECT switch to 5 (P2-2, Baro Rate No. 1). DVM shall indicate -1.303 to -1.363 vdc.

(f) Set 50 FT switch to >50. DVM shall indicate -40 to +40 mvdc.

(g) Set 50 FT switch to <50 and METER SELECT switch to 6 (P1-16, DC Signal Input).

(h) Adjust BARO ADJ control for a DVM indication of +0.995 to +1.005 Vdc. BARO ADJ control must remain above 5.0.

(i) Set METER SELECT switch to 5 (P2-2, Baro Rate No. 1). DVM shall indicate +1.303 to +1.363 vdc.

(3) AC Baro Test

(a) Set INPUT switch to C and METER SELECT switch to 9 (P1-29, Baro AC Ref).

(b) Adjust COMP 115 VAC INPUT control for a DVM indication or 25.75 to 26.25 vac.

(c) Set INPUT switch to A, METER SELECT switch to 6 (P1-25, AC Signal Input) and BARO FUNCTION switch to AC.

(d) Adjust BARO ADJ control for a DVM indication of 498 to 502 mvac. BARO ADJ control must remain above 5.0 to obtain AC voltages which are in-phase with the reference voltages.

(e) Set METER SELECT switch to 10 (P2-1, AC Baro Rate). DVM shall indicate -1.18 to -1.42 vdc.

(f) Set BARO INPUT to VAR (if required) and METER SELECT switch to 5 (P2-2, Baro Rate No. 1). DVM shall indicate +1.18 to 1.42 vdc.

(g) Set INPUT switch to C and METER SELECT switch to 9 (P1-29, Baro AC Ref). Adjust COMP 115 VAC INPUT control for a DVM indication of 21.75 to 22.25 vac.

(h) Set INPUT switch to A and METER SELECT switch to 5 (P2-2, Baro Rate No. 1). DVM shall indicate +1.36 to +1.68 vdc.

(i) Set ACREF switch to HI, INPUT switch to C and METER SELECT switch to 9 (P1-29, Baro AC Ref). Adjust COMP 115 VAC INPUT control for a DVM indication of 99 to 101 vac.

(j) Set INPUT switch to A and METER SELECT switch to 5 (P2-2, Baro Rate No. 1). DVM shall indicate +1.36 to +1.68 vdc.

(k) Set METER SELECT switch to 6 (P1-25, AC Signal Input).

(l) Adjust BARO ADJ control for a DVM indication of 498 to 502 mvac. BARO ADJ control must remain below 5.0 to obtain AC voltages which are out of phase with the reference voltages.

(m) Set METER SELECT switch to 10 (P2-1, AC Baro Rate). DVM shall indicate +1.36 to +1.68 vdc.

(n) Set METER SELECT switch to 5 (P2-2, Baro Rate No. 1). DVM shall indicate -1.36 to -1.68 vdc.

(o) Set INPUT switch to C and METER SELECT switch to 9 (P1-29, Baro AC Ref). Adjust COMP 115 VAC INPUT control for a DVM indication of 114 to 116 vac.

(p) Set INPUT switch to A and METER SELECT switch to 5 (P2-2, Baro Rate No. 1). DVM shall indicate -1.18 to -1.42 vdc.

(q) Set ACREF switch to LO, INPUT switch to C and METER SELECT switch to 9 (P1-29, Baro AC Ref). Adjust COMP 115 VAC INPUT control for a DVM indication of 25.75 to 26.25 vac.

(r) Set INPUT switch to A and METER SELECT switch to 5 (P2-2, Baro Rate No. 1). DVM shall indicate -1.18 to -1.42 vdc.

(s) Set BARO CM/NORMAL switch to CM. Adjust BARO ADJ control clockwise, then counter clockwise while monitoring DVM. DVM shall indicate -60 to +60 mvdc.

(t) Set BARO CM/NORMAL switch to NORMAL, BARO OUTPUT switch to AC2 and METER SELECT switch to 6 (P1-26, Signal Input).

(u) Adjust BARO ADJ control for a DVM indication of 1.160 to 1.164 vac. BARO ADJ control must remain above 5.0 to obtain AC voltages which are in-phase with the reference voltages.

(v) Set METER SELECT switch to 5 (P2-2 Baro Rate No. 1). DVM shall indicate +1.18 to +1.42 vdc.

(w) Set METER SELECT switch to 6 (P1-26, AC Signal Input).

(x) Adjust BARO ADJ control for a DVM indication of 1.160 to 1.164 vac. BARO ADJ control must remain below 5.0 to obtain AC voltages which are out of phase with the reference voltages.

(y) Set METER SELECT switch to 5 (P2-2, Baro Rate No. 1). DVM shall indicate -1.18 to -1.42 vdc.

(z) Set 50 FT switch to >50. DVM shall indicate -40 to +40 mvdc.

(aa) Set 50 FT switch to <50, BARO OUTPUT switch to AC1, BARO INPUT switch to GND, METER SELECT switch to 10 (P2-1, AC Baro Rate) and TEST switch to ON. DVM shall indicate +1.50 to +2.50 vdc.

(ab) Set ACREF switch to OPEN. DVM shall indicate +8.20 to +11.25 vdc.

(ac) Set ACREF switch to LO and TEST switch to OFF.

(4) Flaps Up Logic Test

NOTE: In step (a) through (i) change of status of FD light will be delayed approximately five seconds.

(a) Verify that FD light is off.

(b) Set FLAP 1 and FLAP 2 switches to DOWN and PROGRAM FLAP switch to ON. Verify that FD light is off.

(c) Set FLAP 1 switch to UP. Verify that FD light comes on.

(d) Set FLAP 2 switch to UP and FLAP 1 switch to DOWN, verify that FD light is on.

(e) Set METER SELECT switch to 13 (P2-6, Flaps Up Logic).

(f) Connect oscilloscope vertical input to SCOPE jacks, observe polarity. Connect scope trigger to test fixture P1-6 (Flap Program) jack. Set trigger slope to positive, vertical selector to 5 volts/div., and horizontal selector to 0.5 seconds/div.

(g) Set PROGRAM FLAP switch to OFF and measure time delay of 1.36 to 2.96 seconds before voltage on scope display rises. Verify that FD light goes off.

(h) Connect scope trigger to test fixture P1-4 (Flap No. 2) jack. Set scope trigger to negative and horizontal selector to 0.1 seconds/div.

(i) Set FLAP 2 switch to DOWN and measure time delay of 0.63 to 0.88 seconds before voltage on scope display drops. Verify that FD light comes on.

(j) Set FLAP 1 and FLAP 2 switches to UP.

(5) Gear Down and Gear Down Latch Logic Test

(a) Verify that GL light is off.

(b) Set GEAR 1 switch to DOWN. Verify that GL light comes on.

(c) Set GEAR 2 switch to DOWN and GEAR 1 switch to UP. Verify that GL and GD lights are on.

(d) Set GEAR 2 switch to UP. Verify that GL light goes off and that GD light is on.

(e) Set METER SELECT switch to 12 (P2-5, Gear Down Latch).

(f) Connect scope trigger to test fixture P2-7 (<700 FT) jack. Set trigger slope to negative, vertical selector to 5 volts/ div., and horizontal selector to 50 milliseconds/div.

(g) Set 700 FT switch to >700 and measure time delay of 0.2 to 0.4 seconds before voltage on scope display drops. Verify that GD light goes off.

NOTE: Step (g) may be repeated as follows: Set 700 FT switch to <700, GEAR 2 switch to DOWN. Wait three seconds and set GEAR 2 switch to UP. Repeat step (g).

(h) Set 700 FT switch to <700. Verify that GD light is off.

(i) Set GEAR 2 switch to DOWN. Verify that GD light comes on.

(j) Set 700 FT switch to >700. Verify that GD lights is on.

(k) Set GEAR 2 switch to UP. Verify that GD light goes off.

(l) Set GEAR 2 switch to DOWN. Verify that GD light comes on.

(m) Set TEST switch to ON. Verify that GD light goes off.

(n) Set TEST switch to OFF. Verify that GD light comes on.

(o) Set GEAR 2 switch to UP. Verify that GD light goes off.

(p) Set 700 FT switch to <700. Verify that GD light is off.

(6) Audio Test

(a) Connect scope vertical input to test fixture P1-3 (Audio Input) jack. Set scope vertical selector to 1 volt/div., horizontal selector to 5 milliseconds/div., and trigger selector to internal.

(b) Adjust COMP 115 VAC INPUT control for a scope display of 6.9 to 7.1 volts peak-to-peak sine wave.

(c) Connect scope vertical input to test fixture P1-1 (Audio No. 1 Output) jack. The scope shall display a 1.9 to 2.3 volt peak-to-peak wave form.

(d) Connect scope vertical input to test fixture P1-20 (Audio No. 2 Output) jack. Set AUDIO OUTPUT switch to AUX. The scope shall display 1.9 to 2.3 volts peak-to-peak waveform.

(e) Connect scope vertical input to test fixture P1-22 (Audio 32 ohms) jack. Set AUDIO OUTPUT switch to HI. The scope shall display a 13.0 to 14.1 volts peak-to-peak waveform.

(f) Connect scope vertical input to test fixture P1-9 (Audio 8 ohms) jack. The scope shall display a 6.25 to 7.32 volts peak-to-peak waveform.

(7) For audio assembly, Part No. 722-1798-003 proceed to step (9).

(8) Counter Test (For Audio Assembly, Part No. 722-1798-004 only).

(a) Press and release COUNTER TEST switch on test fixture.

(b) Event counter on audio assembly shall indicate one digit higher for each cycle of the COUNTER TEST switch.

(9) Set TSTR PWR switch and COMP PWR switch to OFF. Disconnect audio assembly from test set up.

F. Calibration Procedure

(1) Calibration Setup.

Prepare calibration setup the same as test setup, para. 6.C., except as follows:

Set 700 FT switch to >700 and 50 FT switch to >50.

NOTE: Lights not referred to in any of the following steps may be either on or off.

NOTE: All calibration steps shall be performed in the order listed.

(2) Tester Verification

Repeat para. 6.D.

(3) Audio Circuit Calibration

CAUTION: "COMP PWR" SWITCH SHALL BE SET TO "ON" BEFORE "TSTR PWR" SWITCH IS SET TO "ON" TO AVOID DAMAGE TO ASSEMBLY UNDER CALIBRATION AND TESTER.

CAUTION: DO NOT SET "COMP 115 VAC INPUT" CONTROL TO LESS THAN 10.

NOTE: Reference to test fixture P1 in the following steps is jack 1 through 30 of the AUDIO section of the test fixture.

(a) Connect oscilloscope vertical input to test fixture P1-3 jack. Slowly decrease COMP 115 VAC INPUT control until scope displays a 6.9 to 7.1 volts peak-to-peak sine wave.

(b) Set AUDIO OUTPUT switch to HI and connect oscilloscope vertical input to test fixture P1-22 jack. Adjust R43 until oscilloscope displays a 13.4 to 13.8 volts peak-to-peak sine wave.

(c) Set AUDIO OUTPUT switch to AUX and connect oscilloscope vertical input to test fixture P1-20 jack. Adjust R42 until oscilloscope displays a 2.0 to 2.2 volts peak-to-peak sine wave.

(d) Set AUDIO OUTPUT switch to LO and connect oscilloscope vertical input to test fixture P1-1 jack. Adjust R42 until oscilloscope displays a 2.0 to 2.2 volts peak-to-peak sine wave.

(e) Repeat steps (c) and (d) until no further adjustment of R42 is necessary to fall within the tolerance of both steps.

(f) Perform functional test per para. 6.E.

(g) Set TSTR PWR switch and COMP PWR switch to OFF. Disconnect audio assembly from test setup.

G. Troubleshooting

Troubleshooting procedures (Ref. Fig. 128) indicate the most probable trouble areas for various malfunctions, their probable cause and correction.

TEST STEP	TROUBLE	PROBABLE CAUSE	CORRECTION
6.D.	Tester Verification		
(1)	All tester lights off.	(a) Blown tester fuse F1.	Replace fuse.
		(b) Loss of tester 115 vac input.	connect tester to 115 vac power source.
		(c) Tester defective	Repair.
	Tester TSTR PWR 115 V light only is on.	(a) Blown in internal tester fuse on +24 vdc light supply.	Replace.
		(b) Tester defective.	Repair.
	Any one tester light only is off.	See below.	
	Proceed to test step 6.D.(2) and repair as indicated below.		
	Voltage within tolerance	(a) Defective lamp	Replace.
		(b) Tester defective.	Repair.
(2) thru (8)	Voltage out of tolerance	(a) Tester defective.	Repair
		(b) Excessive load.	Isolate short on assembly under test.
6.E.(1)	Baro Validity Test		
(a)	Baro light is on.	See below.	
	Connect oscilloscope vertical input (+) lead to test fixture P1-27 jack. Verify presence of 15 KHz signal (approx. 0.2 vac peak-to peak).		
	Signal not present	Q3, R85, R29, R88, C7, R24, C6, R23 and/or jumper E27 defective	Replace.

TEST STEP	TROUBLE	PROBLABLE CAUSE	CORRECTION
6.E.(1)	Baro Validity Test (cont'd)		
(a) (cont'd)	Signal present.	See below	
	Perform test steps (3) (aa) and (3) (ac) and proceed		as noted below.
	Voltage out of tolerance	U2B,U3B,Q16 and/or associated components defective.	Replace.
	Voltage in tolerance.	U8A,U8B,Q12, Q13,Q14, Q4, Q5 and/or associated components defective	Replace.
(b)	Baro light is off.	See below	
	Perform test steps (1) (g) and (1) (i) and proceed as noted below.		
	Baro light comes on in step (1)(g).	U8A,CR15 and/or C23 defective.	Replace.
	Baro light remains off in step (1)(g).	U8B,Q12,Q13,Q14,Q4,Q5, and/or associated components defective.	Replace
(d)	Baro light is on.	U8A defective.	Replace.
	Time delay not in tolerance.	VR17,R67 and/or C19 defective.	Replace.
(e)	Baro light is off.	U8A defective.	Replace.
(f)	Baro light is on.	U8A defective.	Replace.
(g)	Baro light is off	See below.	
	Perform test step (1)(h) and proceed as noted below.		
	Baro light comes on in step (1)(h).	Q4 defective.	Replace
	Baro light remains off in step (1)(h).	CR16 and/or R32 defective.	Replace.
(i)	Baro light is off.	Q5 defective.	Replace.

TEST STEP	TROUBLE	PROBABLE CAUSE	CORRECTION
6.E.(2)	DC Baro Test		
(a)	Voltage out of tolerance.	See below.	
	Perform test step (2)(f) and proceed as noted below.		
	Voltage in tolerance in step (2)(f).	U3A and/or associated components defective.	Replace.
	Voltage out of tolerance in step (2)(f). Set 50 FT switch to <50.	U1A,R64,R65,R66 and/or R63 defective.	Replace.
(b)	Voltage out of tolerance.	U1B,R60,R59,R57 and/or R10 defective.	Replace.
(e)	Voltage out of tolerance.	See below.	
	Perform test step (2)(f) and proceed as noted below.		
	Little or no voltage change.	Q1 and/or Q15 defective.	Replace.
	Voltage in tolerance in step (2)(f), but out of tolerance in step (2)(e). Set 50 FT switch to <50.	U1B,R57 thru R61 defective.	Replace.
(f)	Voltage out of tolerance.	Q1,Q15,R13,R14,R15,R17 and/or jumper E30 defective.	Replace.
(i)	Voltage out of tolerance.	U1B defective.	Replace.
6.E.(3)	AC Baro Test		
(e)	Voltage is +40 to -40mvdc.	Q2,R18,R2,R5,R9,R63,R84 C2 and/or jumper E25 defective.	Replace.
	Voltage out of tolerance.	See below.	

TEST STEP	TROUBLE	PROBABLE CAUSE	CORRECTION
6.E.(3)	AC Baro Test (cont'd)		
(e) (cont'd)	Perform test step (3)(aa) and proceed as noted below.		
	Voltage in tolerance in step (3)(aa).	R2,R3,R5,R6 and/or R7 defective.	Replace and perform test step (3)(ac).
	Voltage out of tolerance in step (3)(aa).	See below.	
	Perform test steps (3)(ab) and (3)(ac) and proceed as noted below.		
	Voltage in tolerance in step (3)(ab).	Q2,U2B,U3B,Q16,Q7 and/or associated components defective.	Replace.
	Voltage out of tolerance step (3)(ab).	Q2,U1A,U3A, and/or associated components defective.	Replace.
(f)	Voltage out of tolerance.	U1B,R59,R60 and/or R61 defective.	Replace.
(h)	Voltage out of tolerance.	U2B,U3B,Q16 and/or associated components defective.	Replace.
(j)	Voltage out of tolerance.	Q17, and/or associated components defective.	Replace.
(m)	Voltage out of tolerance.	U1A and/or U3A defective.	Replace.
(n)	Voltage out of tolerance.	U1B defective	Replace.
(p)	Voltage out of tolerance.	Q17 and/or associated components defective.	Replace.
(r)	Voltage out of tolerance.	U2B,U3B,Q16 and/or associated components defective.	Replace.

TEST STEP	TROUBLE	PROBABLE CAUSE	CORRECTION
6.E(3)	AC Baro Test (cont'd)		
(s)	Voltage out of tolerance.	R2,R3,R5 thru R8,C2,C3, jumper E24 and/or jumper E25 defective.	Replace.
(v)	Voltage out of tolerance.	R1,R4,C1,C4, jumper E26 and/or jumper E23.	Replace.
(y)	Voltage out of tolerance.	U3A defective.	Replace.
(z)	Voltage out of tolerance.	Q2 and/or R16 defective.	Replace.
(aa)	Voltage out of tolerance.	CR14 and/or associated components defective.	Replace.
(ab)	Voltage out of tolerance.	Q2 defective.	Replace.
6.E.(4)	Flaps Up Logic Test		
(a)	FD light is on	See below.	
	Perform test step (1) (a) and (1) (b) and proceed as noted below.		
	FD light is off.	U7B,U4,CR7 and R33 defective.	Replace.
	FD light is on.	U2, and/or associated components defective.	Replace.
(b)	FD light is on.	U7B,U4,CR6,CR8 and C12 defective.	Replace.
(c)	FD light is off.	CR20 and U7B defective.	Replace.
(d)	FD light is off.	CR21 defective.	Replace.
(g)	Time delay out of tolerance.	U2A and/or associated components defective.	Replace.
(i)	Time delay out of tolerance.	U2A and/or associated components defective.	Replace.
6.E(5)	Gear Down and Gear Down Logic Test		
(a)	GL light is on.	U7 defective.	Replace.
(b)	GL light is off.	See below.	

TEST STEP	TROUBLE	PROBABLE CAUSE	CORRECTION
6.E.(5)	Gear Down and Gear Down Logic Test (cont'd)		
(b) (cont'd)	Perform test step (5) (c) and proceed as noted below.		
	GL light is off.	U7 defective.	Replace.
	GL light is off.	U7 and/or CR22 defective.	Replace.
(c)	GL light is off.	U7 and/or CR23 defective.	Replace.
	GD light is off.	U8C,U2,Q10,Q11,VR10,R44, R46,R52 and/or K1 defective.	Replace.
(d)	GD light is off.	Same as (5) (c).	Replace.
(g)	Time delay out of tolerance.	Q11,VR11,C17,R47,R49 and/ or K1 defective.	Replace.
	GD light is on.	See below.	
	Perform test steps (5)(m) and (5)(n) and proceed as noted below.		
	GD light is on.	U2C defective	Replace.
	GD light is off.	U8C,Q10,Q11,VR11,K1,R45, R47,R50,CR9 and/or C17 defective.	Replace.
(h)	GD light is on.	K1 defective.	Replace.
(i)	GD light is off.	K1 defective.	Replace.
(j)	GD light is off.	K1 defective.	Replace.
(k)	GD light is off.	K1 defective.	Replace.
(l)	GD light is off.	K1 defective.	Replace.
(m)	GD light is on.	CR12 and R54 defective.	Replace.

TEST STEP	TROUBLE	PROBABLE CAUSE	CORRECTION
6.E.(5)	Gear Down and Gear Down Logic Test (cont'd)		
(n)	GD light is off.	U2 defective.	Replace.
(o)	GD light is on.	K1 defective.	Replace.
(p)	GD light is on.	K1 defective.	Replace.
6.E.(6)	Audio Test		
(c)	No output or output out of tolerance.	See below.	
	Perform test step (6)(d) and proceed as noted below.		
	Output within tolerance in test step (6)(d).	T2 and/or R36 defective.	Replace.
	Output high or low.	R42 out of calibration.	Calibrate per para. 6.F.
	No output or unable to calibrate.	U5 and/or associated components defective.	Replace.
(d)	No output or output out of tolerance.	T1 and/or R35 defective.	Replace.
(e)	No output of output out of tolerance.	See below.	
	Perform test step (6)(f) and proceed as noted below.		
	Output within tolerance in test step (6)(f).	Jumper E22 defective.	Replace.
	Output high or low.	R43 out of calibration.	Calibrate per para. 6.F.
	No output or unable to calibrate.	T3,U6 and/or associated components defective.	Replace.
(f)	No output or output out of tolerance	T3 defective.	Replace.
6.E.(8)	Counter Test		
(b)	Counter does not advance.	Jumper E31,E32 and/or event counter defective.	Replace.

7. Voice Warning Assembly (A4) Functional Test, Calibration and Troubleshooting

A. General

This section presents the procedures for testing, calibration and troubleshooting of the voice warning assembly (A6) with Sundstrand Data Control tester, Part No. 951-0192-XXX.

B. Test Equipment and Power Requirements

NOTE: Test equipment substitution is permissible provided that the substituted equipment has an accuracy equal to or greater than the specified equipment.

(1) Test Equipment

The test equipment required is delineated in Fig. 129 and listed in Fig. 901.

(2) Power Requirements

Power requirements are noted in Fig. 129 and listed in Fig. 901.

C. Test Setup

NOTE: Fig. 129 delineates the test equipment required and test setup.

(1) Position tester, Part No. 951-5845-001, controls as follows:

COMPARISON WORD SELECT	0/0/0
POWER - ON/OFF	OFF
Selector Switch	(Optional)
DIODE CHECK - A/OFF/B	OFF
$\overline{\text{ROM}}$/ROM	ROM
LOAD/$\overline{\text{LOAD}}$	$\overline{\text{LOAD}}$
BIT 1/$\overline{\text{BIT 1}}$	$\overline{\text{BIT 1}}$
BIT 2/$\overline{\text{BIT 2}}$	$\overline{\text{BIT 2}}$
BIT 3/$\overline{\text{BIT 3}}$	$\overline{\text{BIT 3}}$
BIT 4/$\overline{\text{BIT 4}}$	$\overline{\text{BIT 4}}$
CLOCK INHIBIT/$\overline{\text{CLOCK INHIBIT}}$	$\overline{\text{CLOCK INHIBIT}}$
ROM OUTPUT INHIBIT/$\overline{\text{ROM OUTPUT INHIBIT}}$	$\overline{\text{ROM OUTPUT INHIBIT}}$
$\overline{\text{REDUCE AUDIO}}$/REDUCE AUDIO	$\overline{\text{REDUCE AUDIO}}$
SELF TEST/$\overline{\text{SELF TEST}}$	$\overline{\text{SELF TEST}}$

RECYCLE ENABLE/$\overline{\text{RECYCLE ENABLE}}$	$\overline{\text{RECYCLE ENABLE}}$
$\overline{\text{LOUD G/S}}$/LOUD G/S	LOUD G/S
$\overline{\text{AWO \#1}}$/AWO #1	$\overline{\text{AWO \#1}}$
$\overline{\text{AUDIO OUT}}$/AUDIO OUT	$\overline{\text{AUDIO OUT}}$
$\overline{\text{G/S RATE}}$/G/S RATE	$\overline{\text{G/S RATE}}$
$\overline{\text{STROBE ENABLE}}$/STROBE ENABLE	$\overline{\text{STROBE ENABLE}}$
MEMORY COMPARE/MEMORY SEARCH	MEMORY SEARCH

(2) Connect cable assembly, Part No 704-0781-001, to tester jack and voice warning assembly.

(3) Connect 115 Vac power source to tester, Part No. 951-5842-XXX, 115 VAC, 400 Hz jacks. Adjust the 115 vac source for 115 ±1 vac.

(4) Connect DVM to tester DVM and GND jacks and set DVM to DC.

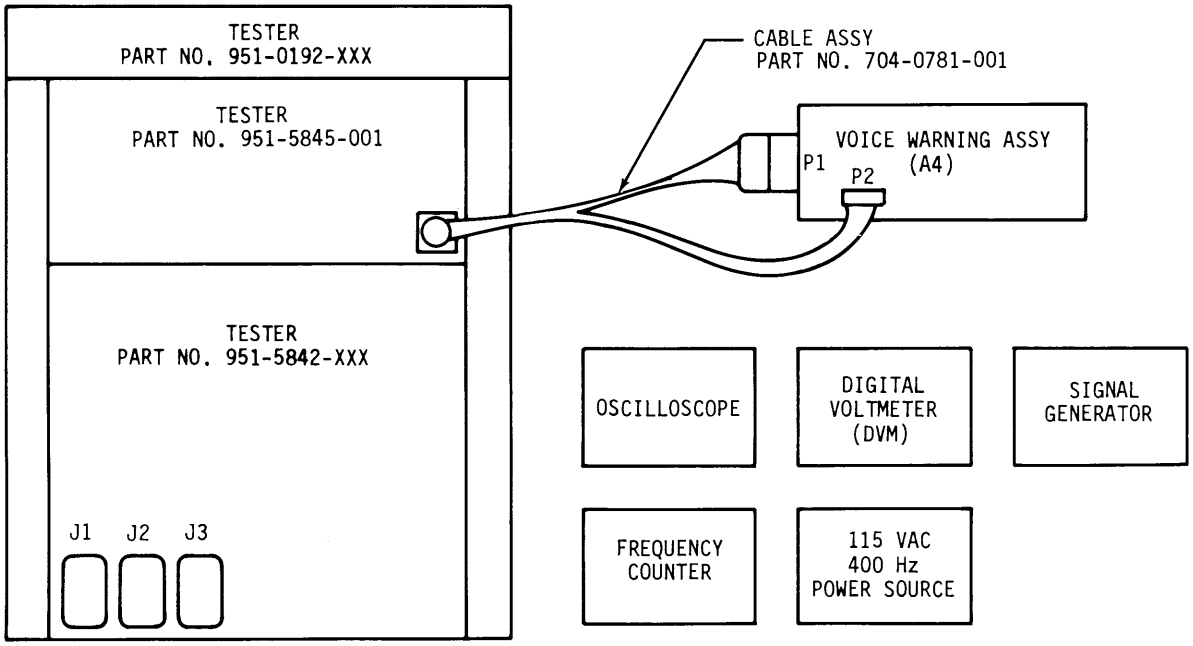

Test Setup
Figure 129

D. Functional Test

(1) Power Verification

(a) Set selector switch to +5V and set POWER switch to ON. DVM shall indicate +5.00 ±0.30 vdc.

(b) Set selector switch to +12V. DVM shall indicate +12.00 ±0.30 vdc.

(c) Set selector switch to -5V. DVM shall indicate -5.00 to ±0.30 vdc.

(d) Set selector switch to +15V. DVM shall indicate +15.00 ±0.20 vdc.

(e) Set selector switch to -15V. DVM shall indicate -15.00 ±0.20 vdc.

(f) Set selector switch to -12V. DVM shall indicate -12.00 ±0.30 vdc.

(g) Set DIODE CHECK switch to A. DIODE CHECK light shall come on. Return switch to OFF. DIODE CHECK light shall go off.

(h) Set DIODE CHECK switch to B. DIODE CHECK light shall come on. Return switch to OFF. DIODE CHECK light shall go off.

(2) Input Interface

(a) Set selector switch to $\overline{\text{CLOCK INHIBIT}}$. DVM shall indicate +5.0 ±0.5 vdc.

(b) Set selector switch to $\overline{\text{ROM OUTPUT INHIBIT}}$. DVM shall indicate +5.0 ±0.5 vdc.

(c) Set selector switch to REDUCE AUDIO. DVM shall indicate +7.0 ±0.7 vdc.

(d) Set selector switch to $\overline{\text{SELF TEST}}$. DVM shall indicate +5.0 ±0.5 vdc.

(e) Set selector switch to AWO #1. Set AWO #1 switch to AWO #1. DVM shall indicate +7.0 ±0.7 vdc. Return AWO #1 switch to $\overline{\text{AWO \#1}}$.

(f) Set selector switch to $\overline{\text{RECYCLE ENABLE}}$. DVM sahll indicate +5.0 ±0.5 vdc.

(g) Set selector switch to LOUD GS. DVM shall indicate +5.0 ±0.5 vdc.

(h) Set selector switch to GLIDESLOPE RATE. DVM shall indicate +11.5 ±1.0 vdc.

(i) Set CLOCK INHIBIT switch to CLOCK INHIBIT and GS RATE switch to GS RATE; wait five seconds, G/S light shall come on and DVM shall indicate <+0.8 vdc. Return switches to CLOCK INHIBIT and GS RATE.

(3) Timing Setup

(a) Set selector switch to CLOCK and AWO #1 switch to AWO #1. Connect oscilloscope and frequency counter to tester SCOPE, COUNTER and GND jacks. Adjust scope to trigger on negative going 5 volt pulses time base of 20 microseconds/CM. Observe that clock pulses are occurring at two different repetition rates in alternate bursts.

(b) Frequency counter shall indicate 154 ±2 microseconds for the slow speed clock display on the scope.

(c) Frequency counter shall indicate 130 ±2 microseconds for the high speed clock display on the scope.

(d) Set ROM OUTPUT INHIBIT switch to ROM OUTPUT INHIBIT. Verify that all four OUTPUT OPEN lights are on.

(e) Set ROM switch to ROM. Connect signal generator to tester EXT CLOCK and GND jacks, and adjust for 800 Hz, 0-5V square wave. Adjust scope to trigger on negative going 5 volt pulses time base of 5 milliseconds/CM. Observe a repetitive pattern of clock pulse bursts alternating with lack of clock pulses.

NOTE: It may be helpful to adjust the signal generator to synchronize the pattern on the scope display.

(f) The scope shall indicate 25 ± 3 milliseconds for the duration between clock pulse bursts.

(g) Set ROM switch to ROM, ROM OUTPUT INHIBIT switch to ROM OUTPUT INHIBIT and AWO #1 switch to AWO #1. Wait two seconds before continuing.

(4) Digital to Analog Convertor Audio Output

(a) Set CLOCK INHIBIT switch to CLOCK INHIBIT, AWO #1 switch to AWO #1 and ROM OUTPUT INHIBIT switch to ROM OUTPUT INHIBIT.

(b) Set CLOCK INHIBIT switch to $\overline{\text{CLOCK INHIBIT}}$ and immediately return it to CLOCK INHIBIT. Verify that all four OUTPUT OPEN indicators are on.

(c) Set ROM switch to $\overline{\text{ROM}}$ and selector switch to DAC OUTPUT. Adjust signal generator for 8K ±260 Hz, 0-5V square wave.

Scope shall display a waveform as shown. The voltage shall be greater than 8 volts peak to peak.

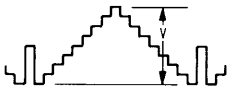

(d) Set selector switch to AUDIO OUTPUT. Scope shall display a waveform as shown. Voltage shall be 11.0 ±2.9 volts peak to peak.

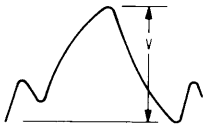

(e) Adjust signal generator for 32K ±2 KHZ, 0-5V square wave. Scope shall display a waveform as shown. The voltage shall be 11.0 ±2.9 volts peak to peak. Note actual voltage.

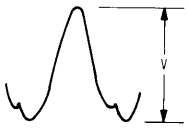

(f) Adjust signal generator for 96K ±4 KHz, 0-5V square wave. Scope shall display a waveform as shown. The voltage shall be 4.9 ±1.9 volts peak to peak.

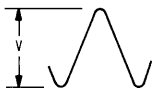

(g) Adjust signal generator for 32K ±2 KHz, 0-5V square wave. Set SELF TEST switch to SELF TEST. Scope shall display a waveform as shown. The voltage shall be one-half of the voltage noted in step (e).

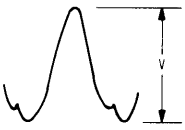

(h) Set CLOCK INHIBIT switch to $\overline{\text{CLOCK INHIBIT}}$, SELF TEST switch to $\overline{\text{SELF TEST}}$, AWO #1 switch to $\overline{\text{AWO \#1}}$, ROM switch to ROM, ROM OUTPUT INHIBIT switch to $\overline{\text{ROM OUTPUT INHIBIT}}$, G/S RATE switch to G/S RATE and set ROM OUTPUT INHIBIT switch back to ROM OUTPUT INHIBIT.

(i) Set CLOCK INHIBIT switch to CLOCK INHIBIT. Verify that all four OUTPUT OPEN lights are on.

(j) Set ROM switch to $\overline{\text{ROM}}$. Scope shall display a waveform as shown. The voltage shall be 16.0 ±3.5 volts peak to peak. Note actual voltage.

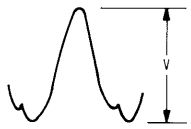

(k) Set LOUD G/S switch to $\overline{\text{LOUD G/S}}$. Scope shall display a waveform as shown. The voltage shall be one-half of the voltage noted in step (j).

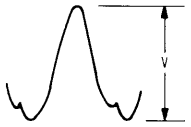

(l) Set ROM switch to ROM, CLOCK INHIBIT switch to $\overline{\text{CLOCK INHIBIT}}$, ROM OUTPUT INHIBIT switch to $\overline{\text{ROM OUTPUT INHIBIT}}$, G/S RATE switch to $\overline{\text{G/S RATE}}$ and LOUD G/S switch to LOUD G/S, DVM shall indicate 0 ±10 mvdc.

(5) Terrain Warning Mode Logic

(a) Set STROBE ENABLE switch to STROBE ENABLE, AUDIO OUT switch to AUDIO OUT. Set AWO #1 switch to AWO #1 and return it to $\overline{\text{AWO \#1}}$. The speaker shall produce the words "whoop-whoop pull-up" for assemblies, Part No. 722-1763-007 and -008 or the words "whoop-whoop terrain" for assembly, Part No. 722-1763--009.

(b) Set REDUCE AUDIO switch to REDUCE AUDIO and AWO #1 switch to AWO #1. Volume level of the audio warning cycle shall decrease noticeably after three complete audio warning cycles and remain at the reduced level.

(c) Set AWO #1 switch to $\overline{\text{AWO \#1}}$ and wait for audio warning cycle to stop.

(d) Set AWO #1 switch to AWO #1. Three audio warning cycles at high volume level, followed by continuing audio warning cycles at reduced volume level shall occur.

(e) Set CLOCK INHIBIT switch to CLOCK INHIBIT and REDUCE AUDIO switch to REDUCE AUDIO.

(f) Set CLOCK INHIBIT switch to CLOCK INHIBIT. The remainder of the audio warning cycle in progress when the clock was inhibited, plus the next two audio warning cycles shall be at low volume level, followed by continuing audio warning cycles at high volume level.

(g) Set SELF TEST switch to SELF TEST. Verify that audio warning volume level is immediately reduced to a lower level.

(h) Set CLOCK INHIBIT switch to CLOCK INHIBIT and SELF TEST switch to SELF TEST.

(i) Set CLOCK INHIBIT switch to CLOCK INHIBIT. The remainder of the audio warning cycle in progress when the clock was inhibited, plus the next two audio warning cycles shall be at low volume level, followed by continuing audio warning cycles at high volume level.

(j) Set POWER switch to OFF and then return it to ON. When POWER switch is returned to ON, a complete audio warning cycle shall begin with the words "whoop-whoop pull-up" for assemblies, Part No. 722-1763-007 and -008 or the words "whoop-whoop terrain" for assembly, Part No. 722-1763-009 shall occur.

(k) Set AWO #1 to AWO #1. Set POWER switch to OFF and then return it to ON. Verify that no audio warning occurs.

(l) Set AUDIO OUT switch to AUDIO OUT and STROBE ENABLE switch to STROBE ENABLE.

(6) Glideslope Warning Mode Logic

(a) Set STROBE ENABLE switch to STROBE ENABLE, AUDIO OUT switch to AUDIO OUT, CLOCK INHIBIT switch to CLOCK INHIBIT and G/S RATE switch to G/S RATE. Wait until G/S light comes on before continuing.

(b) Set G/S RATE switch to G/S RATE and CLOCK INHIBIT switch to CLOCK INHIBIT. One complete audio warning of the word "glide-slope" shall occur. Verify that all MEMORY ADDRESS lights are off at the end of glideslope message.

(c) Set G/S RATE switch to G/S RATE. The word "glideslope" shall repeat continuously.

(d) Set G/S RATE switch to $\overline{\text{G/S RATE}}$. The word "glideslope" in progress shall be completed with no following audio warnings.

(e) Set G/S RATE switch to G/S RATE. Wait for audio warning of the word "glideslope" to start before continuing.

(f) Set AWO #1 switch to AWO #1 and return it to $\overline{\text{AWO \#1}}$. The complete or partial word "glideslope" shall be immediately terminated by a full warning cycle of "whoop-whoop pull-up" for Part No. 722-1763-007 and -008 or "whoop-whoop terrain" for Part No. 722-1763-009 followed by a continuing audio warning of the word "glideslope".

(g) Set LOUD G/S switch to $\overline{\text{LOUD G/S}}$. The audio warning volume level shall immediately be reduced a noticeable amount.

(h) Set LOUD G/S switch to LOUD G/S. The audio warning volume level shall immediately return to a higher volume level.

(i) Set POWER switch to OFF and then return it to ON. When power switch is returned to ON, a complete audio warning of the word "glideslope" shall occur and continue.

(j) Set STROBE ENABLE switch to $\overline{\text{STROBE ENABLE}}$. The word "glideslope" shall continue.

(k) Set selector switch to +15V and connect a jumper between tester DVM jack and J1 on assembly under test. The audio warning of the word "glideslope" shall cease.

(l) Set AWO #1 switch to AWO #1. A audio warning of the words "whoop-whoop pull-up" for assemblies, Part No. 722-1763-007 and -008 or the words "whoop-whoop terrain" for assembly, Part No. 722-1763-009 shall occur.

(m) Set AWO #1 switch to $\overline{\text{AWO \#1}}$, G/S RATE switch to $\overline{\text{G/S RATE}}$ and AUDIO OUTPUT switch to $\overline{\text{AUDIO OUTPUT}}$. Disconnect jumper from tester DVM jack and J1 on assembly under test. Set selector switch to DAC OUTPUT.

(7) Memory Test

(a) Set MEMORY switch to MEMORY COMPARE, and CLOCK INHIBIT switch to CLOCK INHIBIT. Set AWO #1 switch to AWO #1 and return switch AWO #1.

(b) Set G/S RATE switch to G/S RATE, wait five seconds, and return switch to G/S RATE. Verify that MEMORY ADDRESS CS3 light is on and all other MEMORY ADDRESS lights are off.

(c) Set STROBE ENABLE switch to STROBE ENABLE. After a short wait, MEMORY ADDRESS lights shall start counting up in a binary format until CS2 light comes on and all other MEMORY ADDRESS lights are off, counting shall stop. ERROR light shall remain off and OUTPUT WORD lights shall rapidly change until memory addressing stops at which point OUTPUT WORD light 4 shall be on and lights 3, 2 and 1 shall be off. All OUTPUT OPEN lights shall be off while memory addressing is in progress.

(d) Set STROBE ENABLE switch to STROBE ENABLE, MEMORY switch to MEMORY SEARCH and CLOCK INHIBIT switch to CLOCK INHIBIT.

(8) Set POWER switch to OFF and disconnect voice warning assembly from test setup.

E. Calibration Procedure

(1) Calibration Setup

Prepare calibration setup the same as test setup, para. 7.C.

(2) Power Verification

(a) Set selector switch to +5V and set POWER switch to ON. DVM shall indicate +5.00 ± 0.30 vdc.

(b) Set selector switch to +15V. DVM shall indicate +15.00 ± 0.20 vdc.

(c) Set selector switch to -15V. DVM shall indicate -15.00 ± 0.20 vdc.

(d) Set selector switch to -12V. DVM shall indicate -12.00 ±0.30 vdc.

(e) Set selector switch to -5V. DVM shall indicate -5.00 ±0.30 vdc.

(f) Set selector switch to +12V. DVM shall indicate +12.00 ±0.30 vdc.

(3) Clock Calibration

(a) Set selector switch to CLOCK and AWO #1 switch to AWO #1. Connect oscilloscope and frequency counter to tester SCOPE, COUNTER and GND jacks. Adjust scope to trigger on negative going 5 volt pulses time base of 50 microseconds/CM. Observe that clock pulses are occurring at two different repetition rates in alternate bursts.

(b) Set RECYCLE ENABLE switch to RECYCLE ENABLE and adjust R26 clockwise until frequency counter indicates 154 ± 2 microseconds for the slow speed clock display on the scope. Set RECYCLE ENABLE switch to $\overline{\text{RECYCLE ENABLE}}$.

(c) Adjust R24 clockwise until frequency counter indicates 130 ± 2 microseconds for the high speed clock display on the scope.

(4) Clock Interrupt Calibration

(a) Set ROM OUTPUT INHIBIT switch to ROM OUTPUT INHIBIT. Verify that all four OUTPUT OPEN lights come on.

(b) Set ROM switch to $\overline{\text{ROM}}$. Connect signal generator to tester EXT CLOCK and GND jacks and adjust for 800 Hz, 0-5V square wave. Adjust scope to trigger on negative going 5 volt pulses time base of 5 milliseconds/CM. Observe the time between clock bursts.

NOTE: It may be helpful to adjust the signal generator to synchronize the pattern on the scope display.

(c) Adjust R46 for a scope indication of 25 ±3 milliseconds.

(5) Preamplifier Calibration

(a) Set AWO #1 switch to $\overline{\text{AWO \#1}}$ and ROM switch to ROM. Wait two seconds before continuing. Set CLOCK INHIBIT switch to CLOCK INHIBIT, AWO #1 switch to AWO #1, ROM switch to $\overline{\text{ROM}}$ and adjust signal generator for 32K ±2 KHz. Set selector switch

to AUDIO OUTPUT. Observe the scope display. The voltage shall be 11.0 ±2.9 volts peak to peak. Note actual voltage.

(b) Set SELF TEST switch to SELF TEST. Adjust R62 for a scope indication of one-half of the voltage noted in step (a).

(c) Set SELF TEST switch to $\overline{\text{SELF TEST}}$, AWO #1 switch to $\overline{\text{AWO \#1}}$, ROM switch to ROM, CLOCK INHIBIT switch to $\overline{\text{CLOCK INHIBIT}}$, ROM switch to $\overline{\text{ROM}}$ and G/S RATE switch to G/S RATE. Observe display on the scope, the voltage shall be 16.0 ±3.5 volts peak to peak. Note actual voltage.

(d) Set LOUD G/S switch to $\overline{\text{LOUD G/S}}$. Adjust R68 for a scope indication of one-half the voltage noted in step (c).

(6) Set POWER switch to OFF and disconnect voice warning assembly from calibration setup.

F. Troubleshooting

Troubleshooting procedures (Ref. Fig. 130.) indicate the most probable trouble areas for various malfunctions, their probable cause and correction.

TEST STEP	TROUBLE	PROBABLE CAUSE	CORRECTION
7.D. (1)	Power Verification		
(a) thru (f)	Voltage out of Tolerance.	(a) Tester defective (b) Excessive load	Repair Isolate short on assembly under test.
(g) and (h)	DIODE CHECK light will not come on.	CR2 and/or CR3 defective.	Replace.
7.D. (2)	Input Interface		
(a)	Voltage out of tolerance.	(a) U14A defective. (b) Interface cable defective.	Replace. Repair.
(b)	Voltage out of tolerance.	(a) U11 defective. (b) Interface cable defective.	Replace. Repair.
(c)	Voltage out of tolerance.	(a) U1,CR6,R13,R3 and/or CR1 defective. (b) Interface cable defective.	Replace. Repair.
(d)	Voltage out of tolerance.	(a) U1F defective. (b) Interface cable defective.	Replace. Repair.
(e)	Voltage out of tolerance.	(a) U9,CR7,R5 and/or R6 defective. (b) Interface cable defective.	Replace. Repair.
(f)	Voltage out of tolerance.	(a) U3D defective. (b) Interface cable defective.	Replace. Repair.

TEST STEP	TROUBLE	PROBABLE CAUSE	CORRECTION
7.D. (2)	Input Interface (cont'd)		
(g)	Voltage out of tolerance.	(a) U1A defective.	Replace.
		(b) Interface cable defective.	Repair.
(h)	Voltage too high.	R11 defective.	Replace.
	Voltage too low but greater than +1 vdc.	U10B defective.	Replace.
	Voltage too low.	(a) R10 defective.	Replace.
		(b) U9C low	Replace U9,U4,U3 U6,U2 and/or U18 or continue test.
(i)	G/S light does not come on.	U9C high	Replace U9,U10, U6,U4,U5,U3,U2 Q5 and/or associated components or continue test.
	G/S light comes on but does not stay on.	Clock not inhibited- W9,W6,U14,U1,U9 defective.	Replace.
	G/S light comes on but DVM indicates >+0.8 vdc.	U9C defective.	Replace.
7.D. (3)	Timing Setup		
(a)	No clock pulses and test step (2)(i) failed with G/S light not coming on.	U6A,U4C,U2 and/or U7 defective.	Replace.
	No clock pulses but test test (2)(i) OK.	W12,W13,W7,U9B,U10A,U5, U10D,U14A,U1D,U9A,U8,U11C U1C,U7 and/or associated components with preceeding chips defective.	Replace.

TEST STEP	TROUBLE	PROBABLE CAUSE	CORRECTION
7.D. (3)	Timing Setup (cont'd)		
(a) (cont'd)	Only one clock repetition rate.		Continue test.
(b)	Two repetition rates occur, 154 microseconds out of tolerance.	(a) R26 out of calibration.	Calibrate per para. 7.E.
		(b) U8 and/or associated components defective.	Replace.
	Only 130 microseconds repetition rate occurs.	See below	
	Adjust VOLUME ADJ control until output can be heard. Proceed as noted below.		
	Only "pull-up" or "terrain" is heard.	U5 defective.	Replace.
	Full warning cycle is heard.	(a) Jumper W10 defective.	Replace.
		(b) U3C,U9F and/or CR11 defective.	Replace.
(c)	Two repetition rates occur, 130 microseconds out of tolerance.	(a) R24 out of calibration.	Calibrate per para. 7.E.
		(b) R25 defective.	Replace.
	Only 154 microseconds repetition rate occurs.	See below.	
	Adjust VOLUME ADJ control until output can be heard. Proceed as noted below.		
	Only "whoop-whoop" is heard.	Jumper W14,U5 and/or U3D defective.	Replace.
	Partial or no warning cycle is heard.	U16,U17, and/or U18 defective.	Replace.
	Full warning cycle is is heard.	U3C,U9F and/or CR11 defective.	Replace.

TEST STEP	TROUBLE	PROBABLE CAUSE	CORRECTION
7.D. (3)	Timing Setup (cont'd)		
(d)	All four OUTPUT OPEN lights are off.	(a) Jumpers W1 thru W4,U11A,U11B,U19, U20,U21 and/or R48 thru R51 defective.	Replace.
		(b) U1 and/or U2 on assembly Part No. 722-1785-001 defective.	Replace.
(e)	Duration between clock pulse bursts does not exist.	U14B,U11D,U7 and/or U14A defective.	Replace.
(f)	25 milliseconds out of tolerance.	(a) R46 out of calibration.	Calibrate per para. 7.E.
		(b) U7,C31 and/or R45 defective.	Replace.
7.D. (4)	Digital to Analog Convertor Audio Output		
(b)	All four OUTPUT OPEN lights are off.	See probable cause and correction under test step (3)(d).	
(c)	No signal present	U13,U15,R52, and/or jumper W15 defective.	Replace.
	Waveform not as shown or voltage too low.	U13,U14B and/or U15 defective.	Replace.
(d)	No signal present.	U12,R53,R59,R62,R65, R68,C20 and/or jumper E4 defective.	Replace.

TEST STEP	TROUBLE	PROBABLE CAUSE	CORRECTION
7.D. (4)	Digital to Analog Convertor Audio Output (cont'd)		
(d) (cont'd)	Signal greater than tolerance.	(a) In test step (4)(b) CLOCK INHIBIT switch was left in CLOCK INHIBIT position too long before returning it to CLOCK INHIBIT position.	Repeat test starting with step (4)(a).
		(b) "Whoop" attenuation circuit failure - U9E,Q3,Q4 and/or R60 defective.	Replace.
	Signal less than tolerance.	U12,R58 and/or L1 defective.	Replace.
(e) and (f)	Waveform not as shown or voltage out of tolerance.	Filter network failure - C16,C17,C18 and/or L1 defective.	Replace.
(g)	Voltage out of tolerance.	(a) R62 out of calibration.	Calibrate per para. 7.E.
		(b) U1F,U2,U4A,U12 and/or R57 defective.	Replace.
(i)	All four OUTPUT OPEN lights are off.	See probable cause and correction under test step (3)(d).	
(j)	Voltage out of tolerance	U1A and/or U4D defective.	Replace.
(k)	Voltage out of tolerance	(a) R68 out of calibration.	Calibrate per para. 7.E.
		(b) U1A,U4D,U12 and/or R56 defective.	Replace.
(l)	Voltage out of tolerance.	C20 defective.	Replace.

TEST STEP	TROUBLE	PROBABLE CAUSE	CORRECTION
7.D. (5)	Terrain Warning Mode Logic		
(a)	Only "whoop-whoop" is heard.	(a) U11B,R30 and/or jumper W11 defective	Replace.
		(b) For Part No. 722-1763-007 and -009, U21 defective.	Replace.
	"Glideslope" voice is heard.	U11A and/or R38 defective.	Replace.
	Only "pull-up" or "terrain" is heard.	U11B,U19 and/or R30 defective.	Replace.
	Garbled or no voice warning.	(a) U16,U17,U18,R31 thru R36 and/or R39 thru R44 defective.	Replace.
		(b) For Part NOs. 722-1763-007 and -009, U19,U20 and/or U21 defective.	Replace.
		(c) U1 and/or U2 on assembly Part No. 722-1785-001 defective.	Replace.
(b)	Volume level not reduced or does not remain reduced.	U1E and/or U2 defective.	Replace.
	Number of warning cycles incorrect before volume level is reduced.	U2 defective.	Replace.
(d)	Warning cycles at high volume do not occur, only at reduced volume.	U3A defective.	Replace.

TEST STEP	TROUBLE	PROBABLE CAUSE	CORRECTION
7.D. (5)	Terrain Warning Mode Logic (cont'd)		
(f)	Number of warning cycles incorrect before high volume level.	U2 defective.	Replace.
(g)	Reduced volume level is not immediate.	U2 defective.	Replace.
(i)	Number of warning cycles incorrect before high volume level.	U2 defective.	Replace.
(j)	Warning cycle not complete.	(a) U5,U4C,U6A,U10D,U16, U17,U18 and/or jumper W8 defective.	Replace.
		(b) Power reset circuit failure - Q1,Q2 and/or associated components defective.	Replace.
(k)	Audio warning occurs.	Power reset circuit failure - Q1,Q2 and/or associated components defective.	Replace.
7.D. (6)	Glideslope Warning Mode Logic		
(b)	Warning words "pull-up" occurs but no word "glideslope".	U11A defective.	Replace.
	Warning not complete or MEMORY ADDRESS lights are on.	U16,U17,U18 and/or U20 defective.	Replace.
	Warning cycles more than once.	C10 defective.	Replace.

TEST STEP	TROUBLE	PROBABLE CAUSE	CORRECTION
7.D. (6)	Glideslope Warning Mode Logic (cont'd)		
(d)	The word "glideslope" not completed.	U16,U17 and/or U20 defective.	Replace.
	Audio warnings or part of warning follows.	U16,U17 and/or C20 defective.	Replace.
(f)	The word "glideslope" is not immediately interrupted.	U4C defective.	Replace.
(g)	Volume level not reduced.	U1A,U4D and/or U12 defective.	Replace.
(h)	Volume level does not increase.	U1A,U4D and/or R12 defective.	Replace.
(i)	Warning not complete.	Power reset circuit failure - Q1,Q2 and/or associated components defective.	Replace.
(k)	Audio warning of the word "glideslope" continues.	Q5 and/or R71 defective.	Replace.
(l)	No audio warning occurs.	CR14 defective.	Replace.
7.D. (7)	Memory Test		
(b)	MEMORY ADDRESS lights other than CS3 are on.	U16,U17 and/or U18 defective.	Replace.
(c)	ERROR light comes on before CS2 light comes on.	(a) U16,U17 and/or U18 defective.	Replace.

TEST STEP	TROUBLE	PROBABLE CAUSE	CORRECTION
7.D. (7)	Memory Test (cont'd)		
(c) (cont'd)		(b) U19 and/or U21 on assembly part Nos. 722-1763-007 and -009 defective.	Replace.
		(c) U1 and/or U2 on assembly Part No. 722-1785-001 defective.	Replace.
	ERROR light comes on after CS2 light comes on.	U20 defective.	Replace.

8. Synchro Demodulator Assembly (A4A2) Functional Test, Calibration and Troubleshooting

A. General

This section presents the procedures for testing, calibration and troubleshooting the synchro demodulator assembly (A4A2) with Sundstrand Data Control tester, Part No. 951-0192-XXX. Unless otherwise noted in this section; all reference to controls, jacks, connectors and lights, apply to the lower section of the tester.

NOTE: The synchro demodulator assembly (A4A2) is part of the voice warning and synchro demodulator assembly (A4). The voice warning section of the A4 assembly shall be tested per para. 7.

B. Test Equipment and Power Requirements

NOTE: Test equipment substitution is permissible provided that the substituted equipment has an accuracy equal to or greater than the specified equipment.

(1) Test Equipment

The test equipment required is delineated in Fig. 131 and listed in Fig. 901.

(2) Power Requirements

Power requirements are noted in Fig. 131 and listed in Fig. 901.

C. Test Setup

NOTE: Fig. 131 delineates the test equipment and test setup.

(1) Position tester controls as noted in para. 3.C. except set synchro to 90.0 ± 0.1 degrees, VOLUME ADJ control to off (fully counter-clockwise and COMP 115 VAC INPUT control to 100.

(2) Connect test fixture, Part No. 649-0418-001, P1 connector to J2 COMPUTER connector and P3 connector to J3 ATE connector. Secure connectors with jack screws.

(3) Connect test fixture, Part No. 649-0418-001, J1 connector to voice warning and synchro demodulator assembly P1 connector.

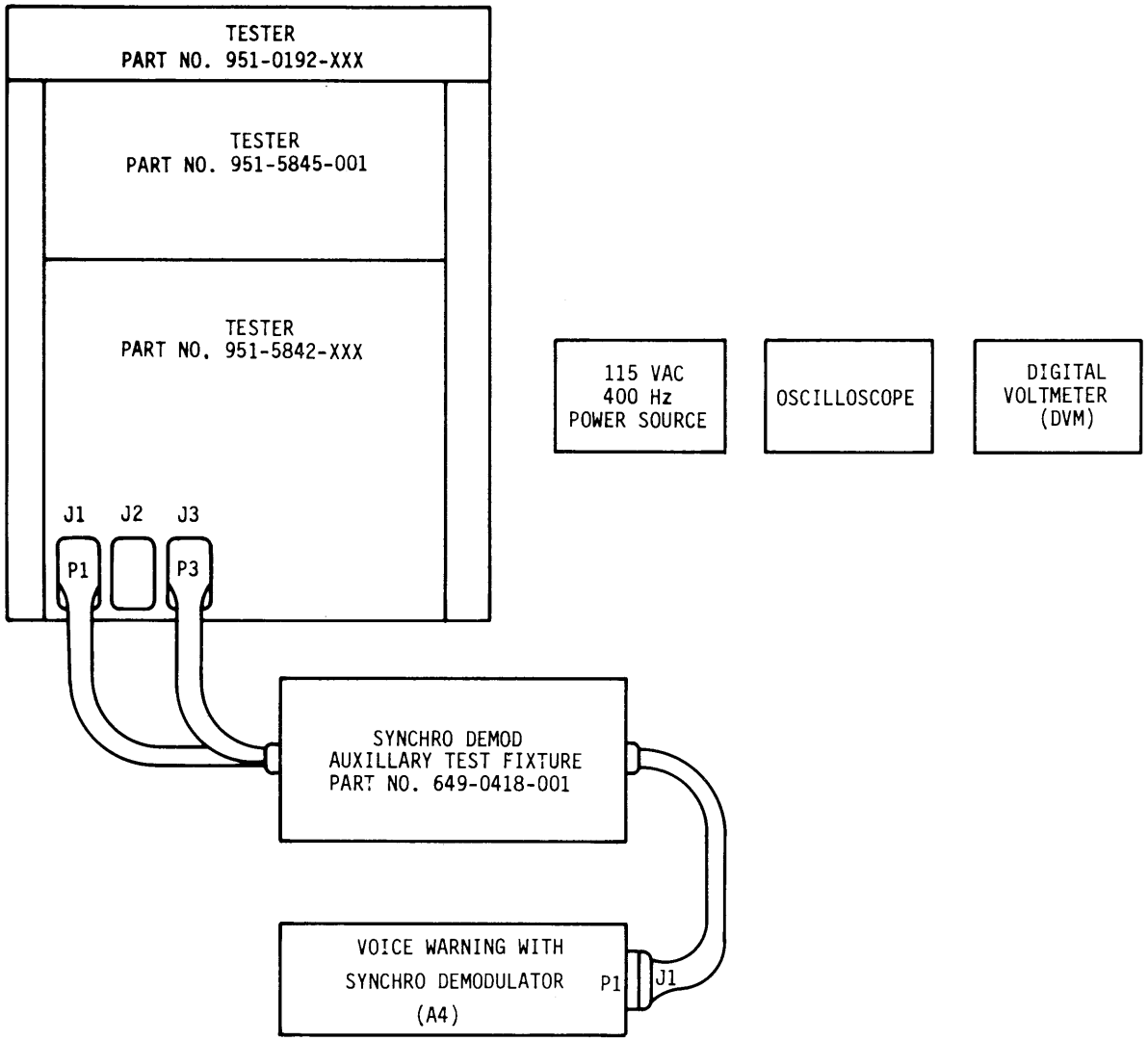

Test Setup
Figure 131

(4) Connect 115 vac power source to tester 115 VAC jacks. Adjust the 115 vac source for 114 to 116 vac.

(5) Connect DVM to tester METER jacks.

NOTE: Lights not referred to in any step of the following steps may be either on or off.

NOTE: Unless otherwise noted, all test steps must be performed in the order listed below.

D. Test Verification

(1) Set TSTR PWR switch to ON and then set COMP PWR switch to ON. Verify that +28V, +15V, -15V and the two 115V lights are on.

(2) Set FUNCT switch to AC.

(3) Set INPUT switch to B and METER SELECT switch to 1. DVM shall indicate 114 to 116 vac.

(4) Set FUNCT switch to DC.

(5) Set METER SELECT switch to 2. DVM shall indicate +24 to +30 vdc.

(6) Set METER SELECT switch to 3. DVM shall indicate +14.85 to +15.15 vdc.

(7) Set METER SELECT switch to 4. DVM shall indicate -14.85 to -15.15 vdc.

(8) Set INPUT switch to A and METER SELECT switch to 1.

E. Functional Test

(1) Set synchro to 359.9 to 000.1 degrees. Connect DVM HI (+) lead to test fixture 8 jack. DVM shall indicate -60 to +60 mvdc. Note actual voltage.

(2) Connect DVM HI (+) lead to test fixture 6 jack. DVM shall indicate +14.5 to +15.4 vdc.

(3) Connect DVM HI (+) lead to test fixture 8 jack. Set synchro to 314.9 to 315.1 degrees. DVM shall indicate +6.610 to +6.890 vdc more positive than voltage noted in step (1). Note actual voltage.

(4) Set synchro to 329.9 to 330.1 degrees. DVM shall indicate -2.16 to -2.34 vdc less positive than voltage noted in step (3).

(5) Set synchro to 44.9 to 45.1 degrees. DVM shall indicate -6.645 to -6.855 vdc more negative than voltage noted in step (1).

(6) Note actual setting of COMP 115 VAC INPUT control. While observing the DVM, slowly adjust COMP 115 VAC INPUT control for a setting of 75 and then return it to original setting. The maximum change shall be -30 to +30 mvdc.

(7) Set synchro to 179.9 to 180.1 degrees. DVM shall indicate -60 to +60 mvdc. Note actual voltage.

(8) Set synchro to 134.9 to 135.1 degrees. DVM shall indicate +6.610 to +6.890 vdc more positive than voltage noted in step (7).

(9) Set synchro to 224.9 to 225.1 degrees. DVM shall indicate -6.645 to -6.855 vdc more negative than voltage noted in step (7). Note actual voltage.

(10) Set synchro to 209.1 to 210.1 degrees. DVM shall indicate +2.16 to 2.34 vdc more positive than voltage noted in step (9).

(11) Connect DVM HI (+) lead to test fixture 9 jack. Set synchro to 89.9 to 90.1 degrees. DVM shall indicate -60 to +60 mvdc. Note actual voltage.

(12) Connect DVM HI (+) lead to test fixture 6 jack. DVM shall indicate +14.5 to 15.5 vdc.

(13) Connect DVM HI (+) lead to test fixture 9 jack. Set synchro to 44.9 to 45.1 degrees. DVM shall indicate +6.610 to +6.890 vdc more positive than voltage noted in step (11).

(14) Set synchro to 134.9 to 135.1 degrees. DVM shall indicate -6.645 to 6.855 vdc more negative than voltage noted in step (11). Note actual voltage.

(15) Set synchro to 119.9 to 120.1 degrees. DVM shall indicate +2.16 to +2.34 vdc more positive than voltage noted in step (14).

(16) Set synchro to 269.9 to 270.1 degrees. DVM shall indicate -60 to +60 mvdc. Note actual voltage.

(17) Set synchro to 224.9 to 225.1 degrees. DVM shall indicate +6.610 to +6.890 vdc more positive than voltage noted in step (16). Note actual voltage.

(18) Set synchro to 239.9 to 240.1 degrees. DVM shall indicate -2.16 to -2.34 vdc less positive than voltage noted in step (17).

(19) Set synchro to 314.9 to 315.1 degrees. DVM shall indicate -6.645 to -6.855 vdc more negative than voltage noted in step (16).

(20) Repeat step (6).

(21) Set synchro to 359.9 to 0.1 degrees and KIFIS switch to ON. Connect DVM HI (+) lead to test fixture 7 jack. DVM shall indicate -6 to +6 mvdc.

(22) Set RAMP (synchro) switch to ON. DVM shall indicate +1.425 to +1.575 vdc.

(23) Set EIN (synchro) switch to A. DVM shall indicate -1.425 to -1.575 vdc.

(24) Set RAMP (synchro) switch to OFF, Synchro to 89.9 to 90.1 degrees and then RAMP (synchro) switch to ON. DVM shall indicate -1.425 to -1.575 vdc.

(25) Set EIN (synchro) switch to $\overline{A}$. DVM shall indicate +1.425 to +1.575 vdc.

(26) Set KIFIS switch to OFF. DVM shall indicate +0.407 to +0.444 vdc.

(27) Set EIN (synchro) to A. DVM shall indicate -0.407 to -0.444 vdc.

(28) Connect oscilloscope to SCOPE jacks. Set scope vertical selector to 5 volts/div. and horizontal selector to 2 milliseconds/div. Set RAMP (synchro) switch to OFF and KIFIS switch to ON. Rotate synchro clockwise just fast enough for circuit to limit. DVM shall indicate +10.0 to +11.0 vdc throughout one complete revolution.

(29) Rotate synchro counterclockwise just fast enough for circuit to limit. DVM shall indicate -10.0 to -11.0 vdc throughout one complete revolution.

(30) Rotate synchro clockwise just fast enough to maintain scope display within +3 to +7 vdc through one full revolution. Verify that there was no discontinutes or other abnormalitites.

(31) Set scope for single sweep, vertical selector to 0.5 volts/div., and horizontal selector for 0.1 seconds/div. Set synchro to 359.9 to 0.1 degrees. Simultaneously set RAMP (synchro) switch to ON and press scope reset switch. Measure, on scope display, the time from setting RAMP switch to ON and the time the scope display increases to +1.0 vdc. The time shall be 0.25 to 0.65 seconds.

(32) Set RAMP (synchro) switch to OFF and synchro to 89.9 to 90.1 degrees. Simultaneously set RAMP (synchro) switch to ON and press scope reset switch. Measure, on scope display, the time from setting RAMP switch to ON and the time scope display increases to +1.0 vdc. The time shall be 0.25 to 0.65 seconds.

(33) Set RAMP (synchro) switch to OFF and EXCT (synchro) switch OFF. Connect DVM HI (+) lead to test fixture 6 jack. DVM shall indicate -0.5 to +1.5 vdc.

(34) Set TSTR PWR switch to OFF. Disconnect voice warning and synchro demodulator assembly from test setup.

F. Calibration Procedure

NOTE: This procedure calibrated the synchro demodulator sub-assembly (A4A2) of the voice warning and synchro demodulator assembly (A4). Refer to para. 7.E. for calibration of the voice warning sub-assembly (A4A1).

(1) Prepare calibration setup the same as test setup, para. 8.C.

(2) Tester verification

Repeat para. 8.D.

(3) Synchro Demodulator Calibration

(a) Set TSTR PWR and COMP PWR switches to ON. Set EXCT (synchro) switch to ON and adjust synchro dial to 90.0 degrees.

(b) Connect DVM HI (+) lead to test fixture 9 jack. DVM shall indicate 0 ±60 mvdc. Note actual voltage.

(c) Adjust synchro dial to 135 degrees. Adjust R84 (IPL Fig. 11, 130) for a DVM indication of -6.75 + (voltage noted in step (3)(b) ±0.01 vdc.

(d) Adjust synchro dial to 0 degrees. Connect DVM HI (+) lead to test fixture 8 jack. DVM shall indicate 0 ±60 mvdc. Note acutal voltage.

(e) Adjust synchro dial to 45 degrees. Adjust R85 (IPL Fig. 11, 130) for a DVM indication of -6.75 + (voltage noted in step (3) (d) ±0.01 vdc.

(f) Perform functional test per para. 8.E.

(g) Set TSTR PWR and COMP PWR switches to OFF. Disconnect voice warning and synchro demodulator assembly from calibration setup.

G. Troubleshooting

Troubleshooting procedures (Ref. Fig. 132) indicate the most probable trouble areas for various malfunctions, their probable cause and correction.

TEST STEP	TROUBLE	PROBABLE CAUSE	CORRECTION
8.D.	Tester Verification		
(1)	All tester lights off.	(a) Blown tester fuse F1.	Replace.
		(b) Loss of tester 115 vac input.	Connect tester to 115 vac power source.
		(c) Tester defective.	Repair.
	Tester TSTR PWR 115V light only is on.	(a) Blown internal tester fuse on +24 vdc light supply.	Replace.
		(b) Tester defective.	Repair.
	Any one tester light only is off.	See below.	
	Proceed to test step 8.D.(2) and proceed as noted below.		
	Voltage within tolerance.	(a) Defective lamp.	Replace.
		(b) Tester defective.	Repair.
(3) (5) (6) and (7)	Voltage out of tolerance.	(a) Tester defective.	Repair.
		(b) Excessive load (±15 vdc).	Isolate short on assembly under test.
8.E.	Functional Test		
(1)	Voltage out of tolerance.	See below.	
	Perform test steps (11) and (13) and proceed as noted below.		
	Voltage within tolerance in steps (11) and (13).	U1B,R56 and/or R57 defective.	Replace.
	Voltage out of tolerance in steps (11) and (13).	U2,R16 thru R19, and/or jumpers E22 and E23 defective.	Replace.

TEST STEP	TROUBLE	PROBABLE CAUSE	CORRECTION
8.E.	Functional Test (cont'd)		
(2)	Voltage out of tolerance.	See below.	
	Set synchro to 89.9 to 90.1 degrees and proceed as noted below.		
	Voltage out of tolerance.	See below.	
	Perform test steps (3), (11) and (13) and proceed as noted below.		
	Voltage within tolerance. in steps (3),(11) and (13).	U3,R29 and/or R31 defective.	Replace.
	Voltage out of tolerance in step (3).	CR1 defective.	Replace.
	Voltage out of tolerance in step (13).	CR2 defective.	Replace.
	Voltage within tolerance after setting synchro to 89.9 to 90.1 degrees.		Proceed with test.
(3)	Voltage in step (3) is -60 to +60 mvdc.	See below.	
	Set EXCT (synchro) switch to OFF and connect DVM HI (+) lead to test fixture 6 jack. Proceed as noted below.		
	Voltage is +14.5 to +15.5 vdc at test fixture 6 jack.	U1C and/or R10 defective.	Replace.
	Voltage is -0.5 to +1.5 vdc at test fixture 6 jack.	(a) +V REF failure - VR1 R28 and/or R4 defective.	Replace.
		(b) U3C,R13 and/or R15 defective.	Replace.
		(c) U1B,R55,R85 and/or Q14 defective.	Replace.

TEST STEP	TROUBLE	PROBABLE CAUSE	CORRECTION
8.E.	Functional Test (cont'd)		
(3) (cont'd)	Voltage in step (3) is -100 to +100 mvdc plus a clean sine wave (not chopped) AC signal of 0.15 to 1.50 volts peak-to-peak at 400 Hz.	See below.	
	Perform test steps (11) and (13. Proceed as noted below.		
	Voltage is out of tolerance in steps (11) and (13).	U1A defective.	Replace.
	Voltage within tolerance in steps (11) and (13) but step (2) out of tolerance.	U1C,R9,CR1,Q1 and/or R7 defective.	Replace.
	Voltage within tolerance in steps (2), (11) and (13).	U3C,Q1A,R13 and/or R53 defective.	Replace.
	Voltage in step (3) is wrong polarity.	R12,U2D,CR1 and/or R11 defective.	Replace.
	Voltage in step (3) is low.	(a) R85 out of calibration.	Calibrate per para. 8.F.
		(b) U1A and/or R1 thru R6 defective.	Replace
		(c) VR1 defective.	Replace.
		(d) U1D,R60,R61 and/or jumper E27 defective.	Replace.
	Voltage in step (3) is high.	(a) R85 out of calibration.	Calibrate per para. 8.F.
		(b) U1A and/or R1 thru R6 defective.	Replace.
		(c) U1C,R11,CR1 and/or R58 defective.	Replace.

TEST STEP	TROUBLE	PROBABLE CAUSE	CORRECTION
8.E.	Functional Test (cont'd)		
(3) (cont'd)		(d) U1D,CR11,CR12,R59, R60,R61 and/or R87 defective.	Replace.
		(e) U2D defective.	Replace.
(4)	Voltage out of tolerance.	U1D,CR12,CR13,R59,R63, R61 and/or R62 defective.	Replace.
(5)	Voltage out of tolerance.	CR11 and/or U1B defective.	Replace.
(6)	Voltage out of tolerance.	U1C,CR1,R11 and/or VR1 defective.	Replace.
(7)	Voltage out of tolerance.	See probable cause and correction under test step (1).	
(8)	Voltage out of tolerance.	See probable cause and correction under test step (3).	
(9)	Voltage out of tolerance.	See probable cause and correction under test step (5).	
(10)	Voltage out of tolerance.	U1A,CR11,CR13,R59,R61, R62 and/or R63 defective.	Replace.
(11)	Voltage out of tolerance.	U2C,R40 and/or R41 defective.	Replace.
(12)	Voltage our of tolerance and test step (2) failed.	See below.	
	Perform test step (13) and proceed as noted below.		
	Voltage in step (13) is within tolerance.	U3B and/or R31 defective.	Replace.
	Voltage in in step (13) is out of tolerance.	CR2 defective.	Replace.
	Voltage out of tolerance in step (12) but in tolerance in step (2).		Proceed with test.

TEST STEP	TROUBLE	PROBABLE CAUSE	CORRECTION
8.E.	Functional Test (cont'd)		
(13)	Voltage in step (13) is -60 to +60 mvdc.	See below.	
	Set EXCT (synchro) switch to OFF and connect DVM HI (+) lead to test fixture 6 jack. Proceed as noted below.		
	Voltage is +14.5 to +15.5 vdc at test fixture 6 jack.	U2B defective.	Replace.
	Voltage is -0.5 to +1.5 vdc at test fixture 6 jack.	(a) -V REF failure - VR2, R42 and/or R43 defective.	Replace.
		(b) U3D and/or R27 defective.	Replace.
		(c) U2C,R39,R84 and/or Q2B defective.	Replace.
	Voltage in step (13) is -100 to +100 mvdc plus a clean sine wave (not chopped) AC signal of 0.15 to 1.50 volts peak-to-peak at 400 Hz.	See below.	
	Voltage out of tolerance in step (12).	U2B,R22,CR2,Q2 and/or R20 defective.	Replace.
	Voltage within tolerance in step (12).	U3D,Q2B and/or R37 defective.	Replace.
	Voltage in step (13) is wrong polarity.	R24,R25 and/or CR2 defective.	Replace.
	Voltage instep (13) is low.	(a) R84 out of calibration.	Calibrate per para. 8.F.
		(b) VR2 defective.	Replace.
		(c) U2A,R46,R48,R86, and/or jumper E25 defective.	Replace.

TEST STEP	TROUBLE	PROBABLE CAUSE	CORRECTION
8.E.	Functional Test (cont'd)		
(13) (cont'd)	Voltage in step (13) is high.	(a) R84 out of calibration.	Calibrate per para. 8.F.
		(b) U2B,R24,R44 and/or CR2 defective.	Replace.
		(c) U2A,CR8,CR9,R45,R46 and/or R48 defective.	Replace.
(14)	Voltage out of tolerance.	CR9 and/or U2C defective.	Replace.
(15)	Voltage out of tolerance.	U2A,CR8,CR9,R45,R47,R48 and/or R49 defective.	Replace.
(16)	Voltage out of tolerance.	See probable cause and correction under test step (11).	
(17)	Voltage out of tolerance.	See probable cause and correction under test step (13).	
(18)	Voltage out of tolerance.	U2A,CR8,CR10,R45,R47,R48 and/or R49 defective.	Replace.
(19)	Voltage out of tolerance.	See probable cause and correction under test step (14).	
(20)	Voltage out of tolerance.	U2B,CR2,R24 and/or VR2 defective.	Replace.
(21)	Voltage out of tolerance.	(a) AR2,R70,R75,CR6 and/or CR7 defective.	Replace.
		(b) Q3B defective.	Replace.
(22)	Voltage is +0.407 to +0.444 vdc.	Q3B,Q5 and/or jumper E29 defective.	Replace.
	Voltage out of tolerance.	(a) AR2,C10,R69,R70,R71 and/or R78 defective.	Replace.
		(b) Q3A,R51 and/or jumpers E26 and E30 defective.	Replace.

TEST STEP	TROUBLE	PROBABLE CAUSE	CORRECTION
8.E.	Functional Test (cont'd)		
(23)	Voltage out of tolerance.	AR2 and/or R74 defective.	Replace.
(24)	Voltage out of tolerance.	(a) AR1,C9,R64,R65,R66 and/or R83 defective.	Replace.
		(b) Q4 and/or R50 defective.	Replace.
(25)	Voltage out of tolerance.	AR1 and/or R35 defective.	Replace.
(26)	Voltage out of tolerance.	Q3B,Q5,R79,R80 and/or R82 defective.	Replace.
(27)	Voltage out of tolerance.	See probable cause and correction under test step (26).	
(28)	Voltage out of tolerance.	CR7,CR15,R68,R73,R74 and/or R83 defective.	Replace.
(29)	Voltage out of tolerance.	CR6,CR14,R35,R67,R71 and/or R72 defective.	Replace.
(30)	Discontinuities occur.	U3A,Q3A,Q4,CR4,CR5,R33 R34,R36,R76 and/or R77 defective.	Replace.
(31)	Time out of tolerance.	C8 and/or C12 defective.	Replace.
(32)	Time out of tolerance.	C9 and/or C11 defective.	Replace.
(33)	Voltage out of tolerance.	U3B,R31,R32,CR3 and/or jumper E28 defective.	Replace.

9. Monitor Logic Assembly (A5) Functional Test and Troubleshooting

A. General

This section presents the procedures for testing and troubleshooting the monitor logic assembly (A5) with Sundstrand Data Control tester, Part No. 951-0192-XXX. Unless otherwise noted in this section; all reference to controls, jacks, connectors and lights apply to the lower section of the tester.

B. Test Equipment and Power Requirements

NOTE: Test equipment substitution is permissible provided that the substituted equipment has an accuracy equal to or greater than the specified equipment.

(1) Test Equipment

The test equipment required is delineated in Fig. 133 and listed in Fig. 901.

(2) Power Requirements

Power requirements are noted in Fig. 133 and listed in Fig. 901.

C. Test Setup

NOTE: Fig. 133 delineates the test equipment required and test setup.

(1) Position tester controls as noted in para. 3.C.

(2) Connect test fixture, Part No. 649-0422-001, P2 connector to tester J3 ATE connector and secure connector with jackscrews. Connect test fixture J1 connector to monitor logic assembly P1 connector and J3 connector to monitor logic assembly P2 connector.

(3) Connect 115 Vac power source to tester 115 VAC jacks. Adjust 115 vac source for 115 ± 1 vac.

(4) Connect DVM to tester METER jacks.

NOTE: Test fixture jacks 1 thru 30 correspond to monitor logic assembly P1 pins 1 thru 30 and jacks 31 thru 45 correspond to P2 pins 1 thru 15 respectively.

NOTE: Lights not referred to in any of the following steps may be either on or off.

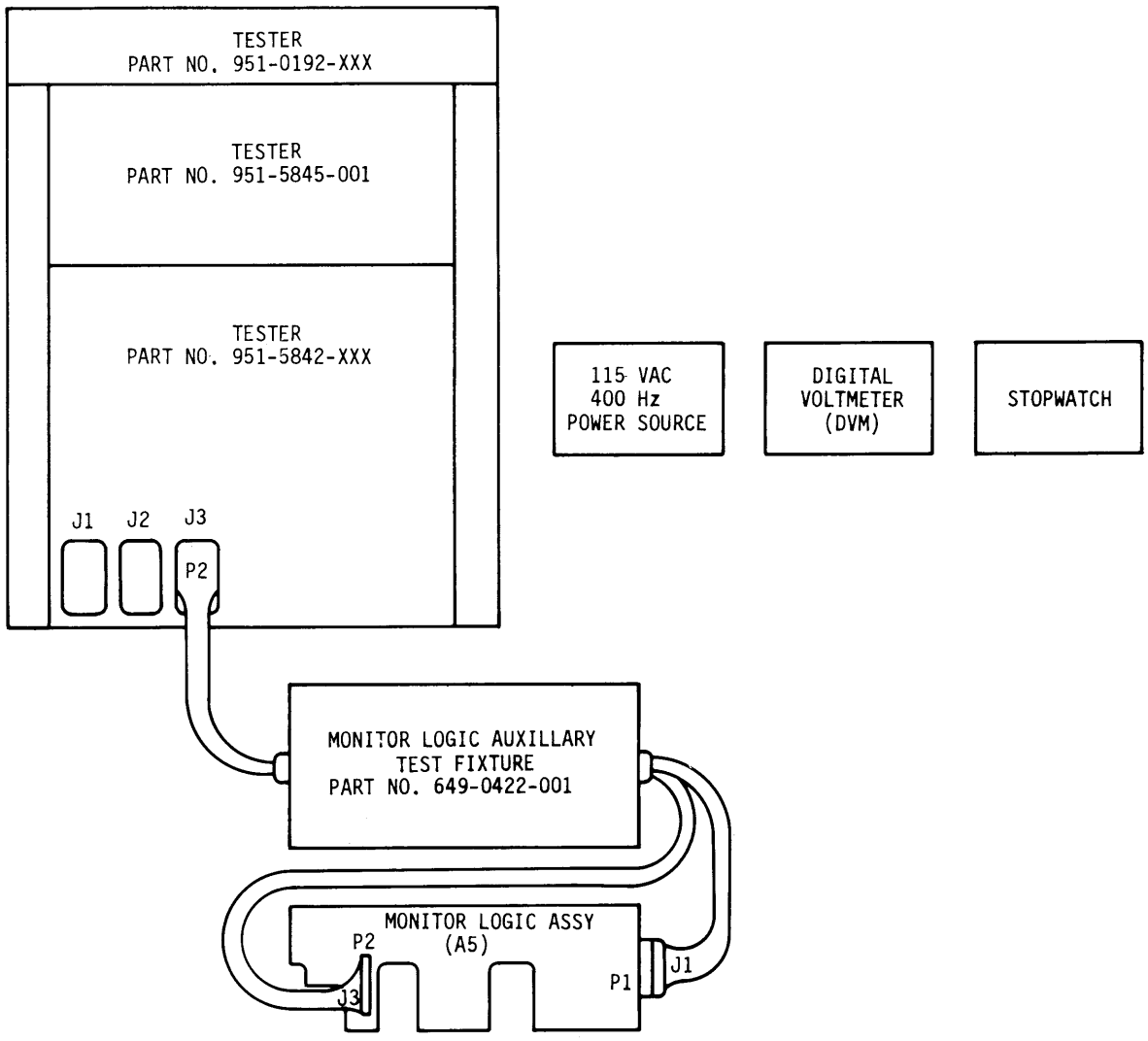

Test Setup
Figure 133

CAUTION: CARE MUST BE EXERCISED SO THAT NO SWITCHES, OTHER THAN THOSE SPECIFIED IN THE PROCEDURED, ARE INADVERTANTLY THROWN AS TEST PROCEDURE COULD BE INVALIDATED OR ASSEMBLY UNDER TEST COULD BE DAMAGED.

D. Tester Verification

(1) Set TSTR PWR switch to ON. Verify that +28V, +15V, -15V and the 115V lights are on.

(2) Set INPUT switch to B and METER SELECT switch to 2. DVM shall indicate +27.00 to +31.00 Vdc.

(3) Set METER SELECT switch to 3. DVM shall indicate +14.85 to +15.15 vdc.

(4) Set METER SELECT switch to 4. DVM shall indicate -14.85 to -15.15 vdc.

E. Functional Test

(1) Set BARO switch to TRUE, 50 FT switch to <50FT, T OFF switch to TRUE, TC switch to <TC, SINK switch to <SINK, FLAPS switch to UP and SELF TEST switch to ON.

(2) Verify that all lights on test fixture are off after several seconds have elapsed to obviate power turn on transients.

(3) Set INPUT switch to A and METER SELECT switch to 11. DVM shall indicate -14.50 to -15.5 vdc.

(4) Set TONE switch to ON. DVM shall indicate +12.50 to +14.50 vdc. Set TONE switch to OFF.

(5) Set BARO switch to FALSE, GS switch to ON, AWO switch to ON, GEAR switch to UP, FLAPS switch to DOWN.

(6) Verify that test fixture AIR DATA, G/S VAL, GPWC OK, GEAR and FLAPS UP lights are on.

(7) Set BARO switch to TRUE, GS switch to OFF, AWO switch to OFF, GEAR switch to DOWN and FLAPS switch to UP.

(8) Set R/A switch to $\overline{\text{VAL}}$. Verify that test fixture RADIO ALT light is on.

(9) Set R/A switch to VAL. Verify that test fixture RADIO ALT light is off.

(10) Set METER SELECT switch to 2, RADIO INPUT switch to RAMP. Adjust RADIO ADJ control until DVM indicates +0.990 to +1.010 vdc. Verify that test fixture RADIO ALT light is off.

(11) Decrease RADIO ADJ control until test fixture RADIO ALT light comes on. DVM shall indicate +93 to +113 mvdc.

(12) Increase RADIO ADJ control until test fixture RADIO ALT light goes off. DVM shall indicate +240 to +300 mvdc.

(13) Set SELF TEST switch to OFF and then return it to ON. Verify that test fixture AIR DATA, G/S VAL, GPWC OK, GEAR, FLAPS UP and RADIO ALT lights come on momentarily and then go off.

(14) Connect DVM HI (+) lead to test fixture J25 jack and LO (-) lead to J16 jack.

(15) Verify INHIBIT switch is OFF. DVM shall indicate 0 to +100 mvdc.

(16) Decrease RADIO ADJ control to 0 volts, that is fully counter clockwise to control stops. DVM shall indicate +3.00 to +3.60 vdc and test fixture RADIO ALT light shall come on.

(17) Set RADIO INPUT switch to FIXED. Verify that test fixture RADIO ALT light goes off.

(18) Set R/A switch to $\overline{\text{VAL}}$. DVM shall indicate +3.00 to +3.70 vdc and test fixture RADIO ALT light shall come on.

(19) Set R/A switch to VAL. Depress and hold PWR MON switch. DVM shall indicate +3.50 to +4.50 vdc. Release PWR MON switch. Set SELF TEST switch to OFF.

(20) Connect DVM HI (+) lead to test fixture J7 jack. DVM shall indicate 0 to +4.0 vdc.

NOTE: The test fixture utilizes a 7.5 volt zener diode to drop the AWO ON voltage of +15.0 vdc to +7.5 vdc into assembly pins 7 and 8.

(21) Verify AWO switch is off. DVM shall indicate 0 to +4.0 Vdc.

(22) Set AWO switch to ON. DVM shall indicate greater +7.0 vdc.

(23) Set TONE switch to ON. DVM shall indicate 0 to +1.5 vdc.

(24) Set T OFF switch to FALSE. DVM shall indicate 0 to +1.5 vdc.

(25) Set TC switch to >TC. DVM shall indicate 0 to +1.5 vdc.

(26) Set CW switch to CW. DVM shall indicate 0 to +1.5 vdc.

(27) Set SINK switch to >SINK. DVM shall indicate +6.5 to +8.5 vdc.

(28) Set GS VOL switch to ON. Verify that all test fixture lights are off.

(29) Set TONE switch to OFF. Verify that test fixture WARNING MODE 1 thru 5 lights come on.

(30) Set TONE switch to ON. Verify that all test fixture lights are off.

(31) Set SELF TEST switch to ON. Verify that test fixture WARNING MODE 1 thru 5 lights come on.

(32) Depress and hold PWR MON switch. Verify that test fixture WARNING MODE 1 thru 5 lights go off. Release PWR MON switch.

(33) Set T OFF switch to TRUE. Verify that test fixture WARNING MODE 3 light goes off.

(34) Set TC switch to <TC. Verify that test fixture WARNING MODE 4 light goes off.

(35) Set CW switch to $\overline{CW}$. Verify that test fixture WARNING MODE 2 light goes off.

(36) Set SINK switch to <SINK. Verify that test fixture WARNING MODE 1 light goes off.

(37) Set GS VOL switch to OFF. Verify that test fixture WARNING MODE 5 light goes off.

(38) Simultaneously set 50 FT switch to >50 FT and start stopwatch. Test fixture RESET light shall come on 1.5 to 3.0 seconds after

setting 50 FT switch to >50 FT. RESET light shall momentarily come on, and then go off.

(39) Set 50 FT switch to <50 FT. Verify that test fixture RESET light is off.

(40) Set TSTR PWR to OFF and disconnect assembly under test from test setup.

F. Troubleshooting

Troubleshooting procedures (Ref. Fig. 134) indicate the most probable trouble areas for various malfunctions, their probable cause and correction.

TEST STEP	TROUBLE	PROBABLE CAUSE	CORRECTION
9.D.	Tester Verification		
(1)	All tester lights off.	(a) Blown tester fuse F1.	Replace fuse.
		(b) Loss of tester 115 vac input.	Connect tester to 115 vac power source.
		(c) Tester defective.	Repair.
	Tester TSTR PWR 115V light only is on.	(a) Blown internal tester fuse on +24 vdc light supply.	Replace.
	Any one tester light only is off.	See below.	
	Proceed to test step 9.D.(2) and repair as indicated below.		
	Voltage within tolerance.	(a) Defective lamp.	Replace.
		(b) Tester defective.	Repair.
(2)	Voltage out of tolerance.	(a) Tester defective.	Repair.
(3) and (4)		(b) Excessive load. (± 15 vdc)	Isolate short on assembly under test.
9.E.	Functional Test		
(2)	Any test fixture light on.	Circuits associated with light(s) that are on.	Continue test to determine defective component(s)
(3) (4)	Voltage out of tolerance.	U3D, R61,R62 or R63 defective.	Replace.
(6)	All test fixture lights are off.	(a) V Ref_1 VR4 or R80 defective.	Replace.
		(b) V Ref_2 VR3,U3A,R1,R2 or R34 defective.	Replace.

TEST STEP	TROUBLE	PROBABLE CAUSE	CORRECTION
9.E	Functional Test (cont'd)		
(6) (cont'd)	Test fixture AIR DATA light is off.	Lamp driver circuit U2A, R5,R7 or R52 defective.	Replace.
	Test fixture G/S VAL light is off.	Lamp driver circuit U2B R3,R4,R95,R42 or CR23 defective.	Replace.
	Test fixture GPWC OK light is off.	(a) TONE switch in ON position.	Set TONE switch to OFF.
		(b) Lamp driver circuit U1C,R6,R8,R9,R10 or R44 defective.	Replace.
(8) (9)	Test fixture RADIO ALT light is off.	Radio altitude lamp driver or validity circuits defective.	Verify by going to test step (14).
(10) (11)	Test fixture RADIO ALT light does not come on.	(a) If assy under test failed test step (8), radio altitude lamp driver circuit U2D and/or associated components defective.	Verify in step (16).
		(b) If assy under test passed test step (8), radio altitude source impedance monitor circuit U3B and/or associated components defective.	Verify in step (16).
	Voltage out of tolerance.	Same as (a) and (b) above.	
(12)	Voltage out of tolerance.	Same as (a) and (b) above.	
(13)	No test fixture lights come on.	Lamp test circuit U1D and/or associated components defective.	Replace.
	Test fixture AIR DATA light does not come on.	Lamp driver circuit or CR2 defective.	Replace.

TEST STEP	TROUBLE	PROBABLE CAUSE	CORRECTION
9.E.	Functional Test (cont'd)		
(13) (cont'd)	Test fixture G/S VAL light does not come on.	Lamp driver circuit or CR1 defective.	Replace.
	Test fixture GPWC OK light does not come on.	Lamp driver circuit or CR3 defective.	Replace.
	Test fixture GEAR light does not come on.	Lamp driver circuit or CR13 defective.	Replace.
	Test fixture FLAPS UP light does not com on.	Lamp driver circuit or CR12 defective.	Replace.
	Test fixture RADIO ALT light does not come on.	Lamp driver circuit or CR16 defective.	Replace
(15)	Voltage out of tolerance.	Radio altitude; validity, source impedance monitor and/or power monitor circuits defective.	Continue test thru test step (19) to determine faulty circuit(s).
(16)	Test fixture RADIO ALT light does not come on.	See below.	
	Voltage out of tolerance.	(a) Radio altitude source impedance monitor circuit U3B and/or associated components defective.	Replace.
		(b) Other inhibit logic circuits defective.	Continue test thru test step (19) to determine faulty circuit(s).
	Voltage in tolerance.	Components R36 and CR7 between lamp driver and radio altitude source impedance monitor circuits defective.	Replace.

TEST STEP	TROUBLE	PROBABLE CAUSE	CORRECTION
9.E.	Functional Test (cont'd)		
(18)	Voltage out of tolerance and/or test fixture RADIO ALT light does not come on.	See below.	
	Assy under test passed test step (16).	Radio validity circuit Q2 and/or associated components defective.	Replace.
	Assy under test failed test step (16).	Power monitor circuit defective.	Continue test thru test step (19).
(19)	Voltage out of tolerance.	Power monitor circuit Q1,VR3 and/or associated components defective.	Replace.
(21) (22) (23)	Voltage out of tolerance.	AWO/ground test/self test comparators U2C,U4 and/or associated components defective.	Replace.
(24) (25) (26) (27)	Voltage out of tolerance.	AWO/ground/self test comparators U2C,U4 and/or associated components defective.	Replace.
	Input to U2C out of tolerance.	Input to U2C-9 should be +15 Vdc with no switches made (TAKE OFF, TERRAIN CW or SINK) and should drop 3 volts when each input is grounded. When all inputs are grounded, U2C-9 should read 3 volts and U2C-8 should read 4.5 volts.	Verify voltages to determine location of defective part(s)

TEST STEP	TROUBLE	PROBABLE CAUSE	CORRECTION
9.E.	Functional Test (cont'd)		
(28)	All test fixture WARNING MODE 1 thru 5 lights are on.	Cockpit self test circuit CR22,U4C,U4D,U5A and/or associated components defective.	Replace.
	Test fixture MODE 1 (SINKRATE) light is on.	U6A and/or associated components defective.	Replace.
	Test fixture MODE 2 (CLOSURE) light is on.	U5D and/or associated components defective.	Replace.
	Test fixture MODE 3 (TAKE OFF) light is on.	U6B and/or associated components defective.	Replace.
	Test fixture MODE 4 (TERRAIN) light is on.	U5C and/or associated components defective.	Replace.
	Test fixture MODE 5 (GLIDESLOPE) light is on.	U5B and/or associated components defective.	Replace.
(29)	All test fixture WARNING MODE 1 thru 5 lights are off.	(a) Power monitor circuit Q3 and/or associated components defective.	Replace.
		(b) Cockpit test circuit U5A,U4B,U4C,U4D and/or associated components defective.	Replace.
	Any individual WARNING MODE light off.	Ball driver circuit associated with that light defective.	See above step (28).
(30)	All test fixture WARNING MODE 1 thru 5 lights are on.	Cockpit self test circuit U4A,U4B,U4C and U4D defective.	Replace.

TEST STEP	TROUBLE	PROBABLE CAUSE	CORRECTION
9.E.	Functional Test (cont'd)		
(31)	All test fixture WARNING MODE 1 thru 5 lights are off.	(a) Power monitor circuit Q3 and/or associated components defective.	Replace.
		(b) Self test circuit U4B U4C,J4D,CR19 and/or U5A defective.	Replace.
	Test fixture MODE 1 (SINKRATE) light is off.	Ball driver circuit U6A and/or associated components defective.	Replace.
	Test fixture MODE 2 (CLOSURE) light is off.	Ball driver circuit U5D and/or associated components defective.	Replace.
	Test fixture MODE 3 (TAKE OFF) light is off.	Ball driver circuit U6B and/or associated components defective.	Replace.
	Test fixture MODE 4 (TERRAIN) light is off.	Ball driver circuit U5C and/or associated components defective.	Replace.
	Test fixture MODE 5 (GLIDESLOPE) light is off.	Ball driver circuit U5B and/or associated components defective.	Replace.
(32)	All test fixture WARNING MODE 1 thru 5 lights are on.	Power monitor circuit Q3 and/or associated components defective.	Replace.
	Test fixture MODE 1 (SINKRATE) light is on.	Ball driver circuit U6A and/or associated components defective.	Replace
	Test fixture MODE 2 (CLOSURE) light is on.	Ball driver circuit U5D and/or associated components defective.	Replace.

TEST STEP	TROUBLE	PROBABLE CAUSE	CORRECTION
9.E.	Functional Test (cont'd)		
(32) (cont'd)	Test fixture MODE 3 (TAKE OFF) light is on.	Ball driver circuit U6B and/or associated components defective.	Replace.
	Test fixture MODE 4 (TERRAIN) light is on.	Ball driver circuit U5C and/or associated components defective.	Replace.
	Test fixture MODE 5 (GLIDESLOPE) light is on.	Ball driver circuit U5B and/or associated components defective.	Replace.
(33)	Any individual WARNING MODE light remains on.	Ball driver circuit associated with light defective. See above.	Replace.
(38)	No change at output	(a) Q4 turn on, Q4 and/or associated components defective.	Replace.
		(b) U6C does not change state, U6 and/or associated components defective.	Replace.
		(c) U3C does not change state, U3 and/or associated components defective.	Replace.
		CR25 defective.	Replace.
		Wire broken to CR25.	Repair.
(39)	Test fixture RESET light is on.	Note (b) or (c) above in step (38).	Replace.

10. Glideslope Assembly (A6) Functional Test and Troubleshooting

A. General

This section presents the procedures for testing and troubleshooting the glideslope assembly (A6) with Sundstrand Data Control tester, Part No. 951-0192-XXX. Unless otherwise noted in this section; all reference to controls, jacks, connectors and lights apply to the lower section of the tester.

B. Test Equipment and Power Requirements

NOTE: Test equipment substitution is permissible provided that the substituted equipment has an accuracy equal to or greater than the specified equipment.

(1) Test Equipment

The test equipment required is delineated in Fig. 135 and listed in Fig. 901.

(2) Power Requirements

Power requirements are noted in Fig. 135 and listed in Fig. 901.

C. Test Setup

NOTE: Fig. 135 delineates the test equipment required and test setup.

(1) Position controls as noted in para. 3.C. except set WARN SEL switch to 2 and METER SELECT switch to 2.

(2) Connect test fixture, Part No. 649-0420-001, P1 connector to tester J1 connector and secure connector with jackscrews. Connect test fixture J1 connector to glideslope assembly P1 connector.

(3) Connect 115 vac power source to tester 115 VAC jacks. Adjust 115 vac power source for 115 ±1 vac.

(4) Connect DVM to tester METER jacks.

(5) Connect a jumper between J2 and J20 jacks on test fixture.

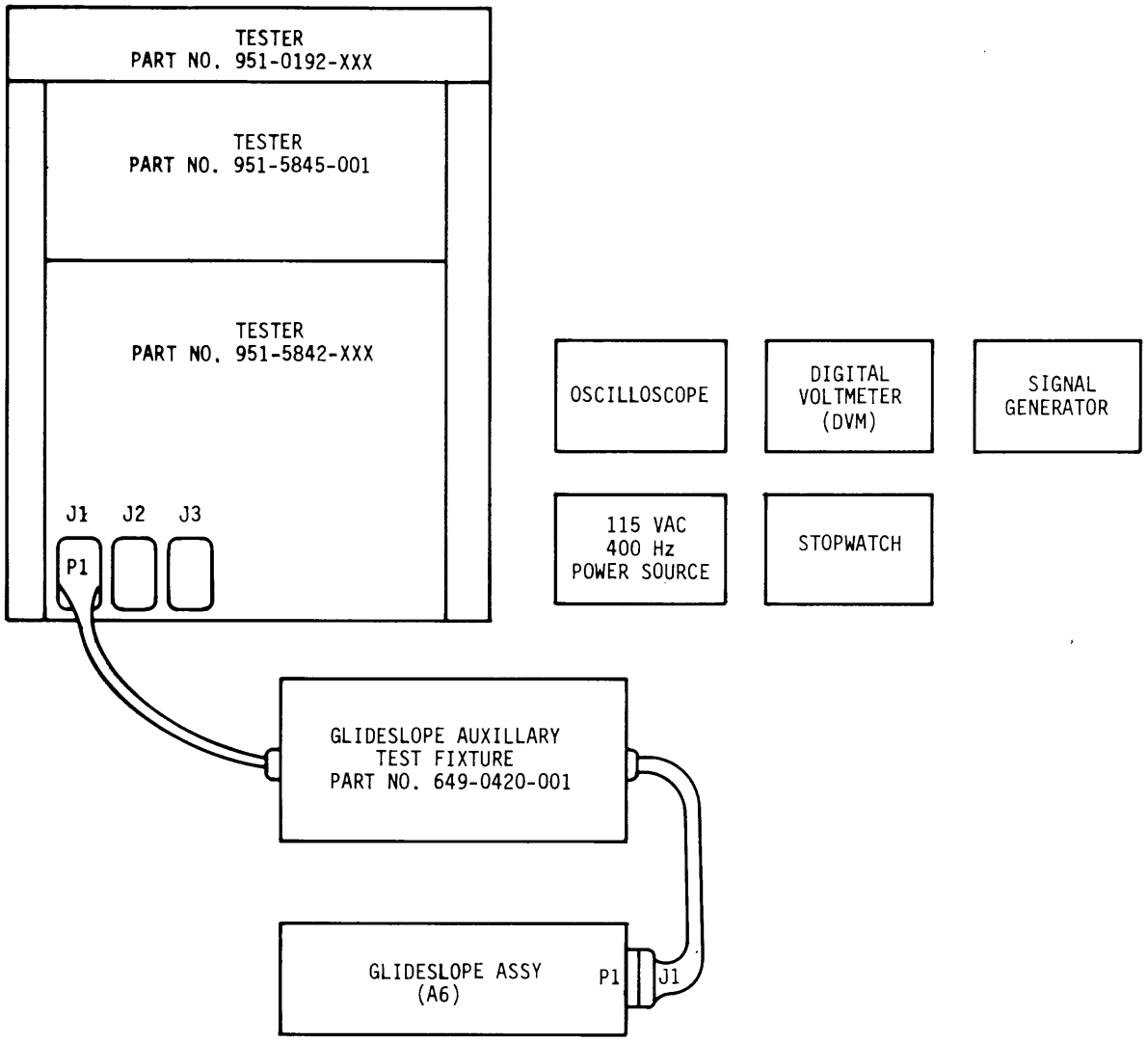

Test Setup
Figure 135

NOTE: Unless noted, disregard status of tester lights in the following steps.

D. Tester Verification

(1) Set TSTR PWR switch to ON. Verify that +28V, +15V, -15V lights and 115V lights are on.

(2) Set INPUT switch to B. DVM shall indicate +26.00 to +32.00 vdc.

(3) Set METER SELECT switch to 3. DVM shall indicate +14.85 to +15.15 vdc.

(4) Set METER SELECT switch to 4. DVM shall indicate -14.85 to -15.15 vdc.

E. Functional Test

(1) Set INH 1 and INH 2 switches to FRONT and TONE switch ($\overline{\text{TEST}}$) to ON (+15V).

(2) Verify that GS FAULT light is off.

(3) Set METER SELECT switch to 11 (G/S DEVIATION). Decrease GLIDESLOPE ADJ control until DVM indicates -0.120 to -0.130 vdc. Set GAIN switch to HI. Press and hold GS COM switch. Verify that GS FAULT light is on for Part Nos. 722-1783-007, and -010 and that GS FAULT light is off for Part No. 722-1783-008 and -009.

(4) Release GS COM switch. Verify that GS FAULT light is off.

(5) Press and hold GS SIG switch.

(a) For Part Nos. 722-1783-007 and -010, verify that GS FAULT light is on.

(b) For Part Nos. 722-1783-008 and -009, verify that GS FAULT light is off.

(6) Release GS SIG switch. Verify that GS FAULT light is off.

(7) Press and hold GS DN switch.

(a) For Part No. 722-1783-007 and -010, verify that GS FAULT light is on.

(b) For Part Nos. 722-1783-008 and -009, verify that GS FAULT light is off.

(8) Release GS DN switch. Verify that GS FAULT light is off.

(9) Press and hold GS UP switch.

(a) For Part Nos. 722-1783-007 and -010, verify that GS FAULT light is on.

(b) For Part Nos. 722-1783-008 and -009, verify that GS FAULT light is off.

(10) Release GS UP switch. Verify that GS FAULT light is off.

(11) Set METER SELECT switch to 17 (HR LINEAR) and GAIN switch to LO. Decrease TEST SIGNAL ADJ control until 300 FT light goes off. Increase TEST SIGNAL ADJ until 300 FT light comes on. DVM shall indicate -1.11 to -1.29 vdc. Note actual voltage.

(12) Decrease TEST SIGNAL ADJ control until 300 FT light goes off. DVM shall indicate -120 to -280 mvdc more negative (less positive) than voltage noted in step (11).

(13) Set METER SELECT switch to 17 (HR LINEAR). Increase TEST SIGNAL ADJ control until DVM indicates -0.795 to -0.805 vdc. Set METER SELECT switch to 11 (G/S DEVIATION) and increase if necessary GLIDESLOPE ADJ control until GSS light goes off. Decrease GLIDESLOPE ADJ control until GSS light comes on.

For Part Nos. 722-1783-007, -008 and -009, DVM shall indicate -0.090 to -0.105 vdc. Note actual voltage.

For Part No. 722-1783-010, DVM shall indicate -0.095 to -0.111 vdc. Note actual voltage.

(14) Increase GLIDESLOPE ADJ control until GSS light goes off. DVM shall indicate +13 to +37 mvdc more positive (less negative) than the voltage noted in step (13).

(15) Decrease GLIDESLOPE ADJ control until GSH light comes on. DVM shall indicate -0.139 to -0.161 vdc. Note actual voltage.

(16) Increase GLIDESLOPE ADJ control until GSH light goes off. DVM shall indicate +13 to +37 mvdc more positive (less negative) than the voltage noted in step (15).

(17) Set METER SELECT switch to 17 (HR LINEAR) and increase TEST SIGNAL control until DVM indicates -0.595 to -0.605 vdc.

(18) Set METER SELECT switch to 11 (G/S DEVIATION) and increase GLIDE-SLOPE ADJ control until GSS light goes off. Decrease GLIDESLOPE ADJ control until GSS light comes on.

For Part No. 722-1783-007, -008 and -009, DVM shall indicate -0.090 to -0.105 vdc.

For Part No. 722-1783-010, DVM shall indicate -0.095 to -0.116 vdc.

(19) Decrease GLIDESLOPE ADJ control until GSH light comes on. DVM shall indicate -0.139 to -0.161 vdc.

(20) Set METER SELECT switch to 17 (HR LINEAR) and increase TEST SIGNAL ADJ control until DVM indicates -0.235 to -0.245 vdc.

(21) Set METER SELECT switch to 11 (G/S DEVIATION) and decrease GLIDE-SLOPE ADJ control until GSS light comes on.

For Part Nos. 722-1783-007, -008 and -009, DVM shall indicate -0.173 to -0.201 vdc.

For Part No. 722-1783-010, DVM shall indicate -0.181 to -0.211 vdc.

(22) Decrease GLIDESLOPE ADJ control until GSH light comes on. DVM shall indicate -0.222 to -0.258 vdc.

(23) Set METER SELECT switch to 17 (HR LINEAR) and GAIN switch to HI. Decrease TEST SIGNAL ADJ control until DVM indicates -0.795 to -0.805 vdc. Increase GLIDESLOPE ADJ control until GSS light goes off. Decrease GLIDESLOPE ADJ control until GSS light comes on. Set METER SELECT switch to 11 (G/S DEVIATION). DVM shall indicate -1.202 to -1.397 vdc.

(24) Set GAIN switch to LO and METER SELECT switch to 17 (HR LINEAR). Decrease TEST SIGNAL ADJ control for a DVM indication of -3.58 to -3.62 vdc. Set METER SELECT switch to 11 (G/S DEVIATION). Increase GLIDESLOPE ADJ control for a DVM indication of -0.005 to +0.005 vdc. Set TONE switch ($\overline{\text{TEST}}$) to OFF. Verify that GSS light is on and that GSH light is off.

(25) Increase GLIDESLOPE ADJ control until DVM indicates +0.495 to +0.505 vdc (FLY DOWN). Verify that GSS and G/S lights are off.

(26) Set TONE switch (TEST) to ON. Decrease GLIDESLOPE ADJ control until DVM indicates -0.120 to -0.130 vdc. Set 1000 FT switch to <1000. Verify that GSS light is on.

(27) Increase TEST SIGNAL ADJ control (HR LINEAR) until 300 FT light comes on. Decrease GLIDESLOPE ADJ control until GSH light comes on.

(28) Set GS switch (ENABLE) and TONE switch (TEST) to OFF. Verify that GS VOL light is off.

(29) Verify that G/S light is on.

(30) Set TONE switch (TEST) to ON and METER SELECT switch to 12 (G/S BEAM FILTER). DVM shall indicate -50 to +50 mvdc.

(31) Set SIGNAL switch to EXT. Connect signal generator to EXT SIGNAL jacks and adjust output for 1.0 ±0.1 Hz sine wave. Connect oscilloscope to SCOPE jacks. Adjust signal generator amplitude for a 2.25 to 2.75 volts peak display on scope. Observe negative full wave signal for smooth operation without oscillation.

NOTE: Verify that signal generator output contains less than ± 15 mvdc offset.

(32) Increase signal generator frequency, above one Hz, for a 1.2 to 1.4 volts peak display on scope. Signal generator frequency shall be 2.0 to 5.0 Hz.

(33) Decrease signal generator frequency, below one Hz for a 1.2 to 1.4 volts peak display on scope. Signal generator frequency shall be 0.10 to 0.25 Hz.

(34) Decrease signal generator frequency until scope displays 0.1 to 0.2 volts peak. Set METER SELECT switch to 17 (HR LINEAR). Increase TEST SIGNAL ADJ control until DVM indicates -0.740 to -0.860 vdc. G/S light may be delayed up to 15 seconds before coming on thereafter GSS lights and G/S will flash every generator cycle.

(35) Set METER SELECT switch to 12. Very slowly increase signal generator frequency until G/S light goes off. Measured amplitude is threshold for 15 second glideslope inhibit circuit. Scope display shall be 0.25 to 0.45 volts peak.

(36) Set METER SELECT switch to 11 and set GLIDESLOPE ADJ control to 1.6 to 1.8 (numbers on dial). Simultaneously set SIGNAL switch to NORM and start stopwatch. G/S light shall come on 12.2 to 18.8 seconds after setting SIGNAL switch to NORM.

(37) Increase GLIDESLOPE ADJ control for a DVM indication of -0.12 to -0.13 vdc. Set METER SELECT switch to 17 and decrease TEST SIGNAL ADJ control (HR LINEAR) for a DVM indication of -3.58 to -3.62 vdc. Connect oscilloscope vertical input to test fixture J1 jack. Adjust scope vertical scale for 10V/div., and horizontal scale for 50 ms/div. Connect scope trigger input to test fixture J12 jack. Set scope trigger to positive slope, external, Dc.

(38) Measure, on scope display, the time from setting GS CANCEL switch to ON (0 volts) and G/S light goes off (+28 volts). The time shall be 0.300 to 0.500 seconds.

NOTE: Step (38) may be repeated as follows: Set 1000 FT switch to >1000 for one second minimum and then return it to <1000. Repeat step (38).

(39) Set GS CANCEL switch to OFF. Verify that G/S light is off.

(40) Increase TEST SIGNAL control (HR LINEAR) until 300 FT light comes on. Set METER SELECT switch to 11. Decrease GLIDESLOPE ADJ control until DVM indicates -0.240 to -0.260 Vdc. Verify that GSH light comes on and that G/S light is off.

(41) Set 1000 FT switch to >1000 for one second minimum and then return it to <1000. Verify that G/S light comes on and that GS VOL light is off.

(42) Set GS CANCEL switch to ON. Verify that GSS, GSH and G/S lights are on and GS VOL light is off, for Part Nos. 722-1783-007, 722-1783-008 and 722-1783-010. Verify that GSS, GSH and GS VOL light are on and G/S light is off for Part No. 722-1783-009.

(43) Set GS CANCEL switch to OFF and 1000 FT switch to >1000.

(44) Set METER SELECT switch to 17. Decrease TEST SIGNAL ADJ control (HR LINEAR) for a DVM indication of -3.58 to -3.62 vdc.

(45) Set METER SELECT switch to 11. Increase GLIDESLOPE ADJ control for a DVM indication of -0.12 to -0.13 vdc. Verify that GSS light comes on.

(46) Set 1000 FT switch to <1000. Verify that G/S light comes on.

(47) Set MODE 2 switch to VOR. Verify that G/S light is on

(48) Set INH 1 switch to BACK. Verify that G/S light goes off.

(49) Set INH 2 switch to BACK. Verify that G/S light is off.

(50) Set INH 1 switch to FRONT. Verify that G/S light is off.

(51) Set MODE 2 switch to ILS and INH 2 switch to FRONT. Verify that G/S light comes on.

(52) Set INH 1 switch to BACK. Verify that G/S light goes off.

(53) Set INH 2 switch to BACK. Verify that G/S light is off.

(54) Set INH 1 switch to FRONT. Verify that G/S light is off.

(55) Set MODE 1 switch to VOR and INH 2 switch to FRONT. Verify that G/S light comes on.

(56) Set INH 1 switch to BACK. Verify that G/S light goes off.

(57) Set INH 2 switch to BACK. Verify that G/S light is off.

(58) Set INH 1 switch to FRONT. Verify that G/S light is off.

(59) Set MODE 2 switch to VOR and INH 2 switch to FRONT. Verify that G/S light is off.

(60) Set MODE 1 switch to ILS. Verify that G/S comes on.

(61) Set GSL and GSH switches to $\overline{\text{VAL}}$. Verify that G/S light goes off.

(62) Set GSL switch to VAL. Verify that G/S light comes on.

(63) Increase GLIDESLOPE ADJ control until DVM indicates -107 to -117 mvdc.

(64) Connect oscilloscope input to test fixture jack 21. Adjust vertical scale for 5 volts/div., and horizontal scale for 1 sec/div. Adjust trigger positive slope, internal, Dc.

(65) Measure, on scope, the time display is +15 volts before dropping to 0 volts during one complete duty cycle. The time shall be 3.4 to 4.6 seconds.

(66) Set METER SELECT switch to 17 and increase TEST SIGNAL ADJ control (HR LINEAR) until DVM indicates -1.790 to -1.810 Vdc.

(67) Measure, on scope, the time display is +15 volts before dropping to 0 volts during complete duty cycle. The time shall be 1.7 to 2.3 seconds.

(68) Set METER SELECT switch to 11 (G/S DEVIATION) and decrease GLIDE-SLOPE ADJ control until DVM indicates -220 to -230 mvdc.

(69) Adjust scope horizontal scale for 0.2 seconds/div. Measure, on scope, the time display is +15 volts before dropping to 0 volts during one complete duty cycle. The time shall be 0.85 to 1.15 seconds.

(70) Increase GLIDESLOPE ADJ control until DVM indicates -108 to -117 mVdc. Set GS switch to ON.

Connect oscilloscope input to test fixture jack 1. Adjust vertical scale for 10 volts/div. and horizontal scale for 0.2 seconds/div. Connect scope trigger input to test fixture jack 3. Adjust trigger positive slope, external, Dc.

(71) Measure, on scope, the time until G/S light comes on after setting GS switch from ON (+28 vdc) to OFF (0 vdc). The time shall be 0.5 to 1.5 seconds.

(72) Increase GLIDESLOPE ADJ control until G/S light goes off. Set TONE switch ($\overline{\text{TEST}}$) to OFF and verify that G/S light comes on.

NOTE: G/S light shall come on without a delay when TONE switch is set to OFF.

(73) Set TONE switch ($\overline{\text{TEST}}$) to ON and verify that G/S light goes off. Reduce 115V power source to 69 vac and return it to 115 ±1 vac. Verify that G/S light remains off during adjustment of power source.

(74) Set TSTR PWR switch to OFF. Disconnect glideslope warning assembly from test setup.

F. Trouble shooting

Troubleshooting procedures (Ref. Fig. 136) indicate the most probable trouble areas for various malfunctions, their probable cause and correction.

TEST STEP	TROUBLE	PROBABLE CAUSE	CORRECTION
10.D.	Tester Verification		
(1)	All tester lights off.	(a) Blown tester fuse F1	Replace fuse
		(b) Loss of tester 115 vac input.	Connect tester to 115 vac power source.
		(c) Tester defective.	Repair.
	Tester TSTR PWR 115V light only is on.	(a) Blown internal tester fuse on +24 vdc light supply.	Replace.
	Any one tester light only is off.	See below.	
	Proceed to test step 10.D.(2) and repair as indicated below.		
	Voltage within tolerance.	(a) Defective lamp.	Replace.
		(b) Tester defective.	Repair.
(2)	Voltage out of tolerance.	(a) Tester defective.	Repair.
(3) and (4)		(b) Excessive load. (± 15 vdc.)	Isolate short on assembly under test.
10.E.	Functional Test		
(2)	GS FAULT light is on.	AR1,U1A,U6D and/or associated components defective.	Continue test.
(3)	GS FAULT light is off for Part No. 722-1783-003,-005 and -006. GS FAULT light is on for Part No. 722-1783-004.	U1A,U6D and/or associated components defective.	Continue test.

TEST STEP	TROUBLE	PROBABLE CAUSE	CORRECTION
10.E.	Functional Test (cont'd)		
(4)	GS FAULT light is on.	AR1,U1A,U6D and/or associated components defective.	Continue test.
(5)(a)	GS FAULT light is off.	U1A,U6D and/or associated components defective.	Continue test.
(5)(b)	GS FAULT light is on.	U1A,U6D and/or associated components defective.	Continue test.
(6)	GS FAULT light is on.	AR1,U1A,U6D and/or associated components defective.	Continue test.
(7)(a)	GS FAULT light is off.	AR1,U6D and/or associated components defective.	Continue test.
(7)(b)	GS FAULT light is on.	AR1,U6D and/or associated components defective.	Continue test.
(8)	GS FAULT light is on.	AR1,U1A,U6D and/or associated components defective.	Continue test.
(9)(a)	GS FAULT light is off.	AR1,U6D and/or associated components defective.	Continue test.
(9)(b)	GS FAULT light is on.	AR1,U6D and/or associated components defective.	Continue test.
(10)	GS FAULT light is on.	(a) U6D and/or associated components defective.	Replace if light did not change status.

TEST STEP	TROUBLE	PROBABLE CAUSE	CORRECTION
10.E.	Functional Test (cont'd)		
(10) (cont'd)		(b) U1A and/or associated components defective.	Replace if failures were only on test steps E.(3) thru E.(6)
		(c) AR1 and/or associated components defective.	Replace if failures were only on test steps E.(7) thru E.(10)
(11)	300 FT light does not come on.	U7B and/or associated components defective.	Replace.
(12)	Voltage out of tolerance.	R65,R66 and/or U7B defective.	Replace.
(13)	GSS light does not change status or voltage out of tolerance.	U7A,U1B,Q12 and/or associated components defective.	Continue test.
(14)	Voltage out of tolerance.	R86 and/or R87 defective.	Replace.
(15)	GSH light does not come on.	(a) U1B and/or associated components defective.	Replace if test steps E.(11) and E.(15) both fail.
		(b) U7A,Q12 and/or associated components defective.	Replace if only test step E.(13) fails.
		(c) U7C and/or associated components defective.	Replace if only test step E.(15) fails.
(16)	Voltage out of tolerance.	R58 and/or R93 defective.	Replace.
(18)	Voltage out of tolerance or GSS light does not change status.	U7A and/or associated components defective.	Replace.

TEST STEP	TROUBLE	PROBABLE CAUSE	CORRECTION
10.E.	Functional Test (cont'd)		
(19)	Voltage out of tolerance or GSH light does not come on.	U7C and/or associated components defective.	Replace.
(21)	Voltage out of tolerance or GSS light does not come on.	U6B,U7A and/or associated components defective.	Replace.
(22)	Voltage out of tolerance.	U6B,U7C and/or associated components defective.	Replace.
(23)	Voltage out of tolerance.	U1A and/or associated components defective.	Replace.
(24)	GSS light is off.	(a) U2B and/or U3B defective.	Replace.
		(b) Q12 and/or associated components defective.	Replace.
(25)	GSS and G/S light are on.	R83,U86 and/or R87 defective.	Replace.
(26)	GSS light is off.	U3B and/or associated components defective.	Replace.
(28)	GS VOL light is on.	(a) Q6,Q7,Q13 and/or associated components defective.	Continue test.
		(b) Q1,R1 and/or U4C defective.	Continue test.
(29)	G/S light is off.	(a) Q6,Q7 and/or associated components defective.	Replace if test step E.(28) and E.(29) fail.
		(b) U4C,Q1,R1 and/or Q13 and associated components defective.	Replace if test step E.(29) passes and test step E.(28) fails.

TEST STEP	TROUBLE	PROBABLE CAUSE	CORRECTION
10.E.	Functional Test (cont'd)		
(30)	Voltage out of tolerance.	U2A,U2B and/or associated components and/or Q2 defective.	Replace.
(31)	Bad waveform.	U2A,U2-B and/or Q2 defective.	Replace.
(32)	Wrong amplitude or frequency.	U1B and/or associated components defective.	Replace.
(33)	Wrong amplitude or frequency.	U2B and/or associated components defective.	Replace.
(34)	G/S light is off.	U6A,U6C and/or associated components defective.	Replace.
(35)	G/S light stays on.	U6A,U6C and/or associated components defective.	Replace.
(36)	Timing out of tolerance.	U6A,U6C and/or associated components defective.	Replace.
(38)	G/S light stays on.	(a) U2C,U4B,U3A and/or K1 defective.	Replace.
		(b) Q5 and/or associated components defective.	Replace.
	Timing out of tolerance.	C17 and/or associated components defective.	Replace.
(39)	G/S light is on.	(a) U2B and/or K1 defective.	Replace.
		(b) Q4 and/or associated components defective.	Replace.

TEST STEP	TROUBLE	PROBABLE CAUSE	CORRECTION
10.E.	Functional Test (cont'd)		
(40)	G/S light is on.	U4C and/or U4B defective.	Replace.
(41)	G/S light is off.	(a) U2B defective.	Replace.
		(b) Q4 and/or associated components defective.	Replace.
	GS VOL light is on.	U4C and/or Q1 defective.	Replace.
(42)	Status of indicator lights incorrect.	U4B and U4C defective.	Replace.
(45)	GSS light is off	U7A and/or associated components defective.	Replace.
(46)	G/S light stay off.	(a) Circuits connected to Q6. All inputs should be high.	Locate low input and replace defective components.
		(b) Q2 thru Q6 and/or associated components defective.	Replace.
(47)	G/S light is off.	U1B and/or associated components defective.	Replace.
(48) thru (50)	G/S light is on.	U1A and/or associated components defective.	Replace.
(51)	G/S light is off.	U1B,U1C and/or associated components defective.	Replace.
(52) thru (54)	G/S light is on.	U1A and/or associated components defective.	Replace.
(55)	G/S light is off.	U1B,U1C and/or associated components defective.	Replace.

TEST STEP	TROUBLE	PROBABLE CAUSE	CORRECTION
10.E.	Functional Test (cont'd)		
(56) thru (58)	G/S light is on.	U1A and/or associated components defective.	Replace.
(59)	G/S light is on.	U1B,U1C and/or associated components defective.	Replace.
(60)	G/S light is off.	U1B,U1C and/or associated components defective.	Replace.
(61)	G/S light is on.	U5B,U2A,U3C and/or associated components defective.	Replace.
(62)	G/S light is off.	U5B,U3C and/or associated components defective.	Replace.
(65), (67) and (69)	No output.	U5D,U5C,Q3,Q8,Q9,Q10 and/or associated components defective.	Replace.
	Timing out of tolerance.	C23,CR7 and/or associated components defective.	Replace.
(71)	Timing out of tolerance.	C19 and/or associated components.	Replace.
(72)	G/S light is off.	Q6,U7D and/or associated components defective.	Replace.
(73)	G/S light comes on.	Q6,U7D and/or associated components defective.	Replace.

DISASSEMBLY

NOTE: Refer to Testing and Troubleshooting to establish condition of unit or most probable cause of malfunction.

1. General

Disassemble Ground Proximity Warning Computer and/or subassemblies only to extent necessary for repair or replacement.

2. General Techniques

A. Identify electrical leads prior to unsoldering and removing from components.

CAUTION: APPLY HEAT CAREFULLY TO PREVENT PRINTED WIRING BOARD DAMAGE.

CAUTION: USE A HEATSINK ON THE LEADS OF ALL SOLID-STATE DEVICES.

B. The components on the printed wiring assemblies are secured to the board by a protective coating and leads soldered on land pattern side of board. Remove coating as necessary from around the defective component. Coating may be removed by clearing the desired area with a chisel tip soldering iron. Remove the defective components which have bent leads by clipping the leads to 1/16 inch from board surface on the component side. Remove component and unsolder the remaining lead wire from the land pattern side of board. Remove defective components having leads going straight into the board by unsoldering on land pattern side and pulling leads through from component side of board.

C. Screws that have been installed with sealing compound can be loosened by applying heat from soldering iron to screwhead.

3. Disassembly Procedures

A. Ground Proximity Warning Computer (IPL Fig. 1)

(1) Turn stud (25) one quarter turn, remove screw (10), and remove cover (5).

NOTE: The power supply assembly (55 or 55A) and comparator and closure warning assembly (65 or 65A) may be positioned such that the majority of the components of these assemblies are accessible for troubleshooting and replacement of parts. This is accomplished by removing four screws (60 and 70) at the top of the assemblies.

(2) Loosen screw locks (p/o 35) and disconnect connectors (35 and 45) from power supply assembly (55 or 55A).

(3) Remove four screws (60) at bottom of assembly and remove power supply assembly (55 or 55A). Ref. para. 3.B for disassembly.

NOTE: Connectors (35) contacts (40) are replaceable.

(4) Loosen screw locks (p/o 35) and disconnect connector (35) from comparator and closure warning assembly (65 or 65A).

(5) Remove four screws (70) at bottom of assembly and remove comparator and closure warning assembly (65 or 65A). Ref. para. 3.C for disassembly.

(6) Disconnect connector (75) from audio assembly (85 or 85A).

(7) Remove screws (90) and audio assembly (85 or 85A). Slide assembly toward front panel by using a screwdriver between bracket on assembly and bracket on chassis until connector is disengaged. Ref. para. 3.D for disassembly.

(8) Disconnect connector (A7P1) from monitor logic assembly (95 or 95A).

(9) Remove screws (100) and monitor logic assembly (95 or 95A). Slide assembly toward front panel by using a screwdriver between bracket on assembly and bracket on chassis until connector is disengaged Ref. para. 3.E for disassembly.

(10) Disconnect connector (105) from voice warning assembly (115C,115D, or 115E).

(11) Remove screws (120 and 125) and voice warning assembly (115C,115D or 115E). Slide assembly toward front panel by using a screwdriver between bracket on assembly and bracket on chassis until connector is disengaged. Ref. para. 3.I for disassembly of voice warning assembly (115C or 115D). Ref. para. 3.J for disassembly of voice warning assembly 115E.

(12) Remove screws (135 and 140) and glideslope assembly (130D,130E,130F or 130G). Slide assembly toward front panel by using a screwdriver between bracket on assembly and bracket on chassis until connector is disengaged. Ref. para. 3.F for disassembly.

(13) Disconnect connector (A7P3) from external counter driver assembly (145 or 145A).

(14) Remove screws (150), and external counter driver assembly (145 or 145A).

(15) Unsolder and/or remove components (160 through 175) from printed wiring board (180).

(16) Remove screws (190), nuts (195), washers (200, 205 and 210), and terminal (215). Remove regulator (185) and insulator (220).

(17) Remove screws (230), nuts (235), washers (240, 245 and 250) and terminal (255). Remove regulator (225) and insulator (260).

(18) Remove screws (270) and self test assembly (266 or 266A). (Ref. para. 3.L for disassembly.

NOTE: Remove nuts (p/o A7S1 and A7S2) and remove A7S1 and A7S2.

(19) Remove screws (280), washers (290), clamps (285), spacers (295) and code identifier assembly (275). Ref. para. 3.M for disassembly.

(20) Remove screws (320) and heatsink assembly (315).

(21) Remove nuts (330 and 365), washers (335, 340, 345, 370, 375 and 380), terminals (350 and 385) and screws (355 and 390). Remove transistors (325 and 360) and insulators (395).

(22) Remove screws (410) and rear bracket (405).

(23) If spring (415) requires removal, drill out rivets (420).

(24) Remove screws (430 and 440) and connectors (425 and 435).

(25) Unsolder and remove diodes (441).

(26) Remove screws (450), nuts (455) and relays (445).

(27) Remove nuts (465), washers (470), spacers (475), screws (480) and ETI meter (460).

(28) Remove nuts (490), washers (495) and transformer (485).

(29) Unsolder and remove capacitor (500).

(30) Remove nut (510), washers (515 and 520) and terminal (505).

(31) Remove screws (530), nuts (535) and connectors (525).

(32) Remove screws (550A) and handle (545).

(33) Remove screws (560 and 570) and plates (560, 565 or 565A).

(34) Remove plate (575).

(35) Remove screws (585) and plate holder (580).

(36) Remove grommet (590).

(37) Remove screws (605) and hook (600).

(38) Remove screws (615) and spacers (610).

B. Power Supply Assembly (IPL Fig. 2)

Unsolder and/or remove components (5 through 440) from printed wiring board (445) as necessary to repair and/or replace defective parts.

C. Comparator and Closure Warning Assembly (IPL Fig. 3)

(1) Remove screws (515 and 520), washers (525), spacers (530) and torbo-prop assembly (510).

(2) Unsolder and/or remove components (5 through 500) from printed wiring board (505) as necessary to repair and/or replace defective parts.

(3) Unsolder and/or remove components (535 through 612) from printed wiring board (620) as necessary to repair and/or replace defective parts.

D. Audio Assembly (IPL Fig. 4)

Unsolder and/or remove components (5 through 470) from printed wiring board (475) as necessary to repair and/or replace defective parts.

E. Monitor Logic Assembly (IPL Fig. 5)

Unsolder and/or remove components (5 through 215) from printed wiring board (220) as necessary to repair and/or replace defective parts.

F. Glideslope Assembly (IPL Fig. 6)

(1) Remove screws (10 and 25), washers (15 and 20), spacers (30) and glideslope No. 2 assembly (5 or 5A). See para. 3.G for disassembly.

(2) For disassembly of glideslope No. 1, (35 or 35A), see para. 3.H.

G. Glideslope No. 2 Assembly (IPL Fig. 7)

Unsolder and/or remove components (5 through 260) from printed wiring board (265).

H. Glideslope No. 1 Assembly (IPL Fig. 8)

Unsolder and/or remove components (5 through 325) from printed wiring board (330).

I. Voice Warning Assembly (IPL Fig. 9)

(1) Remove screws (10 and 20), washers (11 and 15), spacers (25) and pull-up assembly (5).

(2) Unsolder and/or remove components (30 through 40) from printed wiring board (45).

NOTE: Pull-up assembly and mounting hardware noted in steps (1) and (2) above have been superseded by read only memory (245) for future manufacture and procurement.

(3) Unsolder and/or remove components 50 through 371 from printed wiring board (375).

J. Voice Warning Assembly with Synchro Demodulator (IPL Fig. 10)

(1) Remove screws (10 and 25), washers (15 and 20), spacers (30) and synchro demodulator assembly (5).

(2) Ref. para. 3.K for disassembly of synchro demodulator assembly (5).

(3) Ref. para. 3.I for disassembly of voice warning assembly (35).

K. Synchro Demodulator Assembly (IPL Fig. 11)

Unsolder and/or remove components (5 throurh 226) from printed wiring board (230).

L. Self Test Assembly (IPL Fig. 12)

(1) Remove nuts (p/o 5 and 10) and lamps (5 and 10).

(2) Unsolder and remove diodes (15) from indicators (20).

(3) Remove nuts and washer (p/o 20) and indicators (20).

(4) Unsolder and remove connectors (65 and 70), and switches (60 or 60A).

(5) Remove nuts (30), spacers (55), insulator (50) and lamp driver assembly (25).

(6) Unsolder and remove components (35 and 40) from printed wiring board (45).

M. Code Identifier Assembly (IPL Fig. 13)

Unsolder and remove components (5 through 15B) from printed wiring board.

CLEANING

1. General

This section presents instructions for cleaning the components, subassemblies, and parts of the GPWC.

2. Cleaning Materials

Figure 401 lists the materials required to clean components of the GPWC.

NOTE: Equivalent substitutes may be used for all cleaning materials.

MATERIALS	SPECIFICATION/SOURCE
Cloth, Cotton, Lintless Brush, Soft-Bristle Detergent, Low Suds Water, Soft Isopropyl Alcohol	Chemicals and materials may be obtained from any commercial source.

Cleaning Materials
Figure 401

3. Cleaning Procedures

The following paragraphs contain instructions and procedures for cleaning the various parts of the dismantled and disassembled assemblies and parts preparatory to inspection.

WARNING: OBSERVE ALL FIRE PRECAUTIONS WHEN USING FLAMMABLE MATERIALS FOR CLEANING PURPOSES. THESE MATERIALS SHOULD ONLY BE USED OUTSIDE OR IN A VENTILATED BOOTH PROVIDED WITH EXPLOSION-PROOF ELECTRICAL EQUIPMENT AND AN EXHAUST FAN HAVING SPARK-PROOF BLADES.

WARNING: PERFORM OPERATIONS INVOLVING CLEANING SOLVENT UNDER A VENTILATED HOOD. AVOID BREATHING SOLVENT VAPOR; WEAR A SUITABLE MASK WHEN NECESSARY. USE GOGGLES, GLOVES AND APRON TO PREVENT IRRITATION FROM PROLONGED CONTACT. CHANGE CLOTHING THAT HAS BECOME SATURATED WITH SOLVENT.

NOTE: Reference to air jet signifies a hand-operated air nozzle supplied with clean, dry, compressed air at a maximum pressure of 28 pounds per square inch.

WARNING: WEAR GOGGLES WHEN USING AIR JET TO BLOW DUST AND DIRT FROM PARTS. WARN PERSONS IN THE IMMEDIATE VICINITY.

A. Printed Wiring Board Assemblies

All printed wiring board assemblies are protected with conformal coating. The following cleaning instructions apply after the coating has been removed.

CAUTION: DO NOT USE CLEANING SOLVENT ON PRINTED WIRING BOARDS UNLESS CONFORMAL COATING HAS BEEN REMOVED.

(1) Remove dust, dirt and foreign matter from all surfaces, including parts and wiring, using a soft-bristle brush in conjunction with an air jet.

CAUTION: AVOID AIR-BLASTING SMALL COILS, LEADS AND OTHER DELICATE PARTS BY TOO CLOSE AN APPROACH WITH AIR JET NOZZLE. USE CARE WHEN BRUSHING DELICATE PARTS.

(2) Wipe finished surfaces using a cloth moistened with solvent; then dry these surfaces immediately with a clean lintless cloth. Exercise care in wiping solvent from resistors, as color coding may be removed.

NOTE: When necessary to disturb the dress of wiring and cables, restore wiring and cables to their proper positions or dress after cleaning.

(3) After replacing components, jumpers; clean all solder joints with isopropyl alcohol prior to recoating repaired areas.

B. Connectors

(1) Wipe dust and dirt from bodies, shells, and cable clamps using an alcohol-moistened cloth. Wipe dry with a clean, dry, lintless cloth.

(2) Remove dust from inserts using a small, soft-bristle brush and air jet.

(3) Wash dirt and any traces of lubricant from inserts, insulation and contacts using solvent, applies sparingly with a small, soft-bristle brush.

CAUTION: DO NOT PERMIT SOLVENT TO RUN INTO SLEEVES OR CONDUIT COVERING ANY WIRES OR CABLES CONNECTED TO CONTACT TERMINALS OF THE INSERT, AS SWELLING AND SOFTENING WILL RESULT.

(4) Dry insert with an air jet.

C. Machined Metal Parts or Assemblies

(1) Blow dust from surfaces, holes, and recesses with air jet.

(2) Remove bulk of surface grease and dirt with rags.

(3) Immerse machined metal parts in washing bath of solvent, and scrub until clean, working over all surfaces and into all holes and recesses with a suitable non-metallic brush. Flat, wood-backed brushes with soft fiber bristles are recommended for surfaces; round brushes, like those used for washing bottles and test tubes are recommended for holes and recesses.

(4) Remove parts from bath, and permit solvent to drain.

(5) Immerse parts in rinsing bath of cleaning solvent; rinse and remove from bath. Do not permit solvent to remain trapped in holes or recesses during drain. When positioning will not permit draining, use air jet to remove any trapped solvent.

(6) Dry in dust-free, dry area or suitable enclosure. Radiant heat used in a ventilated enclosure is recommended for drying.

D. Miscellaneous Metal Parts

Metal parts, such as mounting plates, mounting clamps, brackets, and attaching hardware should be cleaned in a suitable cleaning machine or washed in solvent to remove all accumulated dirt and dust. Dry using a clean, dry, lintless cloth and air jet.

NOTE: An ultrasonic cleaner, such as Alcore Instrument Company Model 3100 Ultrasonic Cleaner, can be used to clean the small metal parts. Refer to the instructions supplied with the ultrasonic cleaner for exact uses and procedures. Use the drying methods and lubrication normally used in cleaning a part.

E. Non-Metallic Parts

Non-metallic parts include insulating members, printed wiring boards, etc.

(1) Remove all surface dirt and dust using a soft-bristle brush and air jet.

(2) Wipe clean using a solvent-moistened, lintless cloth.

CAUTION: SOLVENT SHOULD NOT BE USED TO CLEAN MYLAR, NYLON, EPOXY, FIBERGLASS, OR TEFLON PARTS BECAUSE SWELLING AND SOFTENING MAY RESULT. CLEAN THESE PARTS USING A WASHING BATH OF TWO OUNCES OF DETERGENT POWDER TO ONE GALLON OF WATER AND USING SUITABLE BRUSHES TO REMOVE SURFACE DIRT OF FOREIGN MATTER.

(3) Dry using a clean, dry, lintless cloth and air jet.

CHECK

1. General

The check procedures detailed in the following paragraphs are required to insure that the repaired equipment will meet new equipment standards of operation. Check includes a thorough check for excessive wear or deterioration, as well as damage or other obvious defects. Do not retain a part for assembly if it is found to be worn in excess of the allowable service limits. If any doubt exists regarding the serviceability of a part, replace the part.

NOTE: Excessive wear may be defined as any obvious deformation or deterioration of parts that may contribute to the malfunction of the unit, or that may render the unit inoperative. Any part exceeding the tolerance limits may also be considered excessively worn or unacceptable.

A. Component Physical Examination

(1) Using adequate light, and under moderate magnification, visually check all parts for scratches, corrosion, nicks, cracks, foreign matter, breaks, or apparent obvious wear.

(2) Check all threaded surfaces for cross thread, stripping, chips, or foreign matter.

(3) Check nameplate and decals for legibility.

B. Component Electrical Examination

(1) Wiring: loose or poor connections.

(2) Insulation: worn, burned and broken areas.

(3) Connectors: loose, corroded, or bent pins and loose conductive material between pins.

(4) Printed wiring boards: overheating, physical damage and board deterioration.

(5) Printed wiring on board: small cracks or shorts.

(6) Detailed parts: displacement, damaged sleeving and shorted leads.

REPAIR

1. General

Repair consists of repairing minor surface damage to the GPWC and repairing or replacing damaged electrical components on printed wiring boards. Ref. Fig. 601 for materials required for repair. Replace all components not meeting the requirements outlined in Check or Testing sections. Remove loose conductive material in accordance with the Cleaning section.

NOTE: Equivalent substitutes may be used for all repair materials.

ITEM	MANUFACTURER AND SPECIFICATION	USE
1. Solder	Tin-lead rosin core activated wire SN60WRAP3 or SN63WRAP3 per QQ-S-571.	All component leads and wires.
2. Sleeving	Teflon sleeving per AMS3655 or Silicon Fiberglass sleeving per MIL-I-3190, class H-A-1 or H-C-1.	Sleeve component leads and jumper wires.
3. Conformal Coating	PC18 manufactured by Hysol Division of the Dexter Corp. (V04347), 211 Franklin St., Olean, New York 14760 or Conathane 1155 per MIL-I-46058, type PUR.	Printed wiring board coating.
4. Jumper Wire	MIL-W-16878/4 or /5, AWG 24, 26 Electrical Insulated, High Temperature Wire.	Jumper wire and PWB connector wiring.
5. Bus Wire	Type S, per QQ-W-343, tinned No. 24 AWG electrical wire.	Bus wire.
6. Paint	Fine Wrinkle Enamel per MIL-E-5558, Type I, Color No. 25177 Semigloss Blue per Fed-Std-595A.	Paint for cover and chassis.
7. Fine grit sandpaper or crocus cloth.	Commercially available.	Finishing metal surfaces.

Repair Materials
Figure 601

2. Solder

   A. Remove old solder as necessary and make connections mechanically strong before resoldering.

   B. Solder per MIL-S-6872 using solder (Ref. 1, Fig. 601).

      CAUTION: USE HEATSINK WHEN SOLDERING A SOLID STATE DEVICE. USE A MINIMUM OF HEAT WHEN SOLDERING COMPONENTS ON A PRINTED WIRING BOARD.

3. Wire

   A. Replace wire as required (Ref. 4, 5, Fig. 601).

      NOTE: If any wire is to be removed from a terminal or component, it should be marked with an identification tag to avoid incorrect connections. When necessary to disturb the arrangement of the wires, insure that the original wire arrangement is restored.

   B. Install sleeving (Ref. 2, Fig. 601) on wires as necessary to prevent shorting.

4. Finished Metallic Surfaces

   A. Polish out minor scoring or scratches with fine grit sandpaper or crocus cloth (Ref. 7, Fig. 601).

   B. Clean all polished areas with clean cloth dipped in solvent (Ref. Cleaning). Wipe dry with a clean lint-free cloth.

   C. Finish with paint (Ref. 6, Fig. 601).

5. Printed Wiring Assemblies (Ref. IPL Figs. 2 through 13).

   NOTE: Coatings, adhesives and sleevings are to be applied only to components that have been replaced.

   A. Sleeve component leads and jumper wire with sleeving (Ref. 2, Fig. 601) as required to prevent shorting.

   B. Apply conformal coating (Ref. 3, Fig. 601), to all replaced components and circuit side of printed wiring board. Apply coating as follows:

(1) Insure that printed wiring boards are clean and dry.

(2) Coating may be sprayed, applied with a brush or board may be dipped.

(3) Allow coating to air dry (approximately 2 hours) before handling.

NOTE: For maximum protection, boards should be allowed to cure for a period of 24 hours at room temperature.

C. Replace wiring, as necessary, on board connectors.

ASSEMBLY

1. General

A. Assemble the equipment covered by this manual in accordance with the following procedures. Although complete assembly procedures are provided, the extent of assembly at any one time will be dependent on extent of disassembly.

B. Observe all identification marks when soldering electrical leads to components.

C. Refer to Fig. 701 for materials required during assembly, to Fits and Clearances section, for tolerances, clearances, etc., and to Special Tools, Fixtures and Equipment section for special equipment required during assembly.

2. General Techniques

CAUTION: USE HEATSINK WHEN SOLDERING A SOLID-STATE DEVICE. USE A MINIMUM OF HEAT WHEN SOLDERING COMPONENTS ON A PRINTED WIRING ASSEMBLY.

A. Remove old solder when necessary and make connections mechanically secure before resoldering.

B. Solder per MIL-S-6872 using solder (Ref. 1, Fig. 701).

C. Apply conformal coating (Ref. 2, Fig. 701), to all replaced components, repaired areas, and to new solder joints on printed wiring assemblies after functional test (Ref. Testing and Troubleshooting). Apply coating as follows:

(1) Insure that printed wiring assemblies are clean and dry.

NOTE: Clean all new solder joints with isopropyl alcohol prior to applying conformal coating.

(2) Coating may be sprayed, applied with a brush or assembly may be dipped.

(3) Apply coating to air dry (approximately 2 hours) before handling.

NOTE: For maximum protection assemblies should be allowed to cure for a period of 24 hours at room temperature.

D. Sleeve component leads and jumper wires as required to prevent shorting (Ref. 3, Fig. 701).

3. Assembly Materials

Figure 701 lists the materials required for assembly.

NOTE: Equivalent substitutes may be used for all assembly materials.

ITEM	MANUFACTURER/SPECIFICATION	USE
1. Solder	Tin-lead core activated wire SN60WRAP3 or SN63WRAP3 per QQ-S-571.	All component leads and wires.
2. Conformal coating	PC18, manufactured by Hysol Division of Dexter Corp., 211 Franklin St., Olean, N.Y. 14760 or Conathane 1155 per MIL-I 46058, type PUR.	Printed wiring assembly coating and solder connections.
3. Sleeving	Teflon sleeving per AMS 3655 or Silicon Fiberglass sleeving per MIL-I-3190, class H-A-1 or H-C-1.	Sleeve component leads and jumped wires.
4. Adhesive	Epoxi-Patch Kit 1-C, manufactured by Hysol Div. of Dexter Corp., 211 Franklin St., Olean, N. Y. 14760	Bond capacitor to printed wiring board.
5. Adhesive	A12, manufactured by Armstrong Products Co., Inc., P. O. Box 567, Warsaw, Indiana 46580	Bond grommet to printed wiring board.
6. Adhesive	PR1574, manufactured by Products Research and Chemical Corp., Burbank, Calif. 91504	Bond connectors to printed wiring boards.
7. Wire	High temperature electrical wire per MIL-W-16878/4 or 5, Type E or EE.	Electrical wiring.
8. Jumper	Electrical wire per QQ-W-343, Type S, tinned.	Bus wire.
9. Heatsink compound	DC340, manufactured by Dow Corning Corp., South Saginaw Road, Midland, Michigan 48641	Heat conductor from regulators and transistors to heatsink chassis.
10. Adhesive	Type 404, manufactured by Loctite Corp., 705 N. Mountain Rd., Newington, Conn. 06111.	Bond grommet to chassis bracket.

Assembly Materials
Figure 701 (Sheet 1 of 2)

ITEM	MANUFACTURER/SPECIFICATION	USE
11. Staking compound	Sealant Grade C, manufactured by Loctite Corp., 705 N. Mountain Rd., Newington, Conn.	Retain screws.
12. Adhesive	EC2216B/A, manufactured by Minnesota Mining & Manufacturing Co., St. Paul, Minn. 55101	Bond insulator to cover.

Assembly Materials
Figure 701 (Sheet 2 of 2)

4. Assembly Procedures

A. Code Identifier Assembly (IPL Fig. 13)

Install components (5 through 15B) onto printed wiring board, solder as required.

B. Self Test Assembly (IPL Fig. 12)

(1) Install lamps (5 and 10) with nuts (p/o 5 and 10) and indicators (20) with nuts and washers (p/o 20) onto housing (80).

(2) Install diodes (15) on indicators (20), solder as required. Diodes shall lay tight against body of indicators.

(3) Install components (35 and 40) onto printed wiring board (45), solder as required.

(4) Install insulator (50) and lamp driver assembly (25) with spacers (55 and nuts (30).

(5) Install switches (60 or 60A) and connectors (65 and 70), solder as required. Sleeve connector terminals with (75).

(6) Apply conformal coating (Ref. 2, Fig. 701), to all solder connections.

C. Synchro Demodulator Assembly (IPL Fig. 11)

(1) Install components (5 through 226) onto printed wiring board (230), solder as required.

(a) If resistors and diodes require replacing, mount body of component 0.040 inch maximum above printed wiring board.

(b) If transistors require replacing, mount top of transistor 0.370 inch maximum above printed wiring board.

(c) If CK05 and CK06 type capacitors require replacing, mount lead side of component 0.030 to 0.090 inch above printed wiring board.

(d) If variable resistors require replacing, mount lead side of component 0.040 inch maximum above printed wiring board.

(e) If capacitors (60) require replacing, bond to printed wiring board with adhesive (Ref. 4, Fig. 701).

(2) Functional test and calibrate (Ref. Testing and Troubleshooting).

D. Voice Warning with Synchro Demodulator Assembly (IPL Fig. 10)

(1) Ref. para. 3.E for assembly of Voice Warning Assembly (35).

(2) Replace jumper wires between sub-assemblies with type E24, EE24, E26 or EE26 wire (Ref. 7, Fig. 701).

(3) Install synchro demodulator assembly (5) with screws (10 and 25), washers (15 and 20) and spacers (30).

(4) Functional test and calibrate (Ref. Testing and Troubleshooting).

E. Voice Warning Assembly (IPL Fig. 9)

(1) Install components (50 through 371) onto printed wiring board (375), solder as required.

(a) If resistors and diodes require replacing, mount body of component 0.040 inch maximum above printed wiring board.

(b) If transistors require replacing, mount top of transistor 0.370 inch maximum above printed wiring board.

(c) If CK05 and CK06 type capacitors require replacing, mount lead side of component 0.030 to 0.090 inch above printed wiring board.

(d) If variable resistors require replacing, mount lead side of component 0.030 to 0.060 inch above printed wiring board.

(e) If connectors (350 and 355) require replacing, bond to printed wiring board with a small bead of adhesive (Ref. 6, Fig. 701).

(f) Replace jumper wires on printed wiring board (375) with tape E24, EE24, E26 or EE26 wire (Ref. 7, Fig. 701).

(2) Install components (30 through 40) onto printed wiring board (45), solder as required.

(3) Install pull-up assembly (5) with screws (10 and 20) washers (11 and 15) and spacers (25).

NOTE: Pull-up assembly, components and mounting hardware noted in steps (2) and (3) above have been superseded by read only memory (245) for future manufacture and procurement. If components on pull-up assembly require replacement; remove pull-up assembly, mounting hardware, connectors (350) and discard. Install read only memory (245) and solder as required.

(4) Functional test and calibrate (Ref. Testing and Troubleshooting).

F. Glideslope No. 1 Assembly (IPL Fig. 8)

(1) Install components (5 through 325) onto printed wiring board (330), solder as required.

(a) If resistors and diodes require replacing, mount body of component 0.040 inch maximum above printed wiring board.

(b) If transistors require replacing, mount top of transistor 0.370 inch maximum above printed wiring board.

(c) If CK05 and CK06 type capacitors require replacing, mount lead side of component 0.030 to 0.090 inch above printed wiring board.

(d) Replace jumper wires on printed wiring board with type E24 wire (Ref. 7, Fig. 701).

(2) Functional test (Ref. Testing and Troubleshooting).

G. Glideslope No. 2 Assembly (IPL Fig. 7)

(1) Install components (5 through 260) onto printed wiring board (265), solder as required.

(a) If resistors and diodes require replacing, mount body of component 0.040 inch maximum above printed wiring board.

(b) If transistors require replacing, mount top of transistor 0.370 inch maximum above printed wiring board.

(c) If CK05 and CK06 type capacitors require replacing, mount lead side of component 0.030 to 0.090 inch above printed wiring board.

(2) Functional test (Ref. Testing and Troubleshooting).

H. Glideslope Assembly (IPL Fig. 6)

(1) Replace jumper wires between sub-assemblies with type E24, EE24, E26 or EE26 wire (Ref. 7, Fig. 701).

(2) Install glideslope No. 2 assembly (5 or 5A) with screws (10 and 25), washers (15 and 20) and spacers (30).

(3) Functional test (Ref. Testing and Troubleshooting).

I. Monitor Logic Assembly (IPL Fig. 5)

(1) Install components (5 through 215) onto printed wiring board (220), solder as required.

(a) Replace jumper wires on printed wiring board with type E26 or EE26 wire (Ref. 7, Fig. 701).

(b) If resistors and diodes require replacing, mount body of component 0.040 inch maximum above printed wiring board.

(c) If transistors require replacing, mount top of transistor 0.370 inch maximum above printed wiring board.

(d) If CK05 and CK06 type capacitors require replacing, mount lead side of component 0.030 to 0.060 inch above printed wiring board.

(e) If connector (200) requires replacing, bond to printed wiring board with a small bead of adhesive (Ref. 6, Fig. 701).

(f) If replacement of grommets (195) is required, secure to printed wiring board with adhesive (Ref. 5, Fig. 701).

(g) If diode VR2(75) and resistor R34(100) requires replacing, install component in printed wiring board and form leads over flat against circuit pattern before soldering.

(2) Functional test (Ref. Testing and Troubleshooting).

J. Audio Assembly (IPL Fig. 4)

(1) Install components (5 through 470) onto printed wiring board (475), solder as required.

(a) Replace jumper wires on printed wiring board with type E26 or EE26 wire (Ref. 7, Fig. 701).

(b) If resistors and diodes require replacing, mount body of component 0.040 inch maximum above printed wiring board.

(c) If transistors require replacing, mount top of transistor 0.370 inch maximum above printed wiring board.

(d) If CK05 and CK06 type capacitors require replacing, mount lead side of component 0.030 to 0.060 inch above printed wiring board.

(e) If variable resistors require replacing, mount lead side component 0.030 to 0.06 inch above printed wiring board.

(f) If capacitors C6(75) and C10(350), diode CR7(335), resistors R13(115), R14 and R15(340), R36(300) and R43(290) require replacing, component leads must be terminated a maximum of 0.050 inch from board surface.

(g) If connector (450) requires replacing, bond to printed wiring board with a small bead of adhesive (Ref. 6, Fig. 701).

(h) If grommets (455) require replacing, secure to printed wiring board with adhesive (Ref. 5, Fig. 701).

(i) If amplifier (30) requires replacing, coat faying surfaces between amplifier and heatsink with heatsink compound (Ref. 9, Fig. 701).

(2) Functional test and calibrate (Ref. Testing and Troubleshooting)

K. Comparator and Closure Warning Assembly (IPL Fig. 3)

(1) Install components (5 through 500) onto printed wiring board (505), solder as required.

(a) If resistors and diodes require replacing, mount body of component 0.040 inch maximum above printed wiring board.

(b) If transistors require replacing, mount top of transistor 0.370 inch maximum above printed wiring board.

(c) If CK05 and CK06 type capacitors require replacing, mount lead side of component 0.030 to 0.060 inch above printed wiring board.

(d) If connector (490) requires replacing, bond to printed wiring board with a small bead of adhesive (Ref. 6, Fig. 701).

(2) Install components (535 through 612) onto printed wiring board (620), solder as required.

(a) If resistors and diodes require replacing, mount body of component 0.040 inch maximum above printed wiring board.

(b) If transistors require replacing, install component in printed wiring board and form leads over falt against circuit pattern before soldering. Leads shall not extend more than 0.08 inch above circuit pattern.

(c) If resistors (595) require replacing, select from resistors (599 through 612) during calibration (Ref. Testing and Troubleshooting) of the final assembly.

(3) Install turbo-prop assembly (510) with screws (515 and 520) washers (525) and spacers (530). Apply staking compound (Ref. 11, Fig. 701) to threads of screws (515).

(4) Functional test (Ref. Testing and Troubleshooting).

L. Power Supply Assembly (IPL Fig. 2)

(1) Install components (5 through 440) onto printed wiring board (445).

(a) Replace jumper wires on printed wiring board with type E26 or EE26 wire (Ref. 7, Fig. 701).

(b) If resistors and diodes require replacing, mount body of component 0.040 inch maximum above printed wiring board.

(c) If transistors or optional voltage regulators (185A and 235A) require replacing, mount top of component 0.370 inch maximum above printed wiring board.

(d) If CK05 and CK06 type capacitors require replacing, mount lead side of component 0.030 to 0.060 inch above printed wiring board.

(e) If variable resistors require replacing, mount lead side of component 0.030 to 0.060 inch above printed wiring board.

(f) If connectors (430 and 440) require replacing, bond to printed wiring board with a small bead of adhesive (Ref. 6. Fig. 701).

(g) Install jumpers between terminal lugs (220 and 270) and printed wiring board, between voltage regulators (185 and 235) and printed wiring board with AWG 26 wire (Ref. 7, Fig. 701).

(2) Functional test and calibrate (Ref. Testing and Troubleshooting).

M. Ground Proximity Warning Computer (IPL Fig. 1)

(1) Install spacers (610) with screws (615).

(2) Install hook (600) with screws (605).

(3) If replacement of grommet (590) is required, secure to chassis with adhesive (Ref. 10, Fig. 701).

(4) Install trademark plate holder (580) with screws (585).

(5) Install trademark plate (575).

(6) Install patent plate (555) and self test plates (565 or 565A) with screws (560 and 570).

(7) Install handle (545) with screws (550).

(8) Install connectors (525) with screws (530) and nuts (535).

(9) Install lug terminal (505) with washers (515 and 520) and nut (510).

(10) Install capacitor (500). Bond to chassis with adhesive (Ref. 4, Fig. 701).

(11) Install transformer (485) with washers (495) and nuts (490).

(12) Install ETI meter (460) with screws (480), spacers (475), washers (470) and nuts (465).

(13) Install diodes (441) on relays (445).

(14) Install relays (445) with screws (450) and nuts (455).

(15) Install connectors (425 and 435) with screws (430 and 440).

(16) If spring (415) requires replacing, install with rivets (420).

(17) Install bracket (405) with screws (410).

(18) Install transistor (360) on heatsink (400) with screws (390), washers (370, 375 and 380), terminal (385), insulator (395) and nuts (365). Apply heatsink compound (Ref. 9, Fig. 701) to both sides of insulator (395).

NOTE: Trim transistor leads to 0.24 to 0.30 inch from mounting surface of transistor before mounting.

(19) Install transistor (325) on heatsink (400) with screws (355), washers (335, 340 and 345), terminal (350), insulator (395) and nuts (330). Apply heatsink compound (Ref. 9, Fig. 701) to both sides of insulator (395).

NOTE: Trim transistor leads to 0.24 to 0.30 inch from mounting surface of transistor before mounting.

(20) Install code identifier assembly (275) on heatsink assembly (315) with screws (280), washers (290), clamps (285) and spacers (295). Apply Staking compound (Ref. 11, Fig. 701 to threads of screws (280).

(21) Install heatsink assembly (315) with screws (320). Apply staking compound (Ref. 11, Fig. 701 to threads of screws (320).

(22) Install self test assembly (266 or 266A) with screws (270).

NOTE: Install A7S1 and A7S2 with nuts (p/o A7S1 and A7S2).

(23) Install identification plate (265, 265A, 265B, 265C, 265D, 265E or 265F.

(24) Install regulator (225) with screws (230), washers (240, 245 and 250), terminal (255), insulator (260) and nuts (235). Apply heatsink compound (Ref. 9, Fig. 701) to both sides of insulator (260).

(25) Install regulator (185) with screws (190), washers (220, 205 and 210), terminal (215), insulator (220) and nuts (195). Apply heatsink compound (Ref. 9, Fig. 701) to both sides of insulator (220).

(26) Install resistors (165 and/or 160) and connector (170) onto printed wiring board (180).

(27) Install external counter driver (145 or 145A) with screws (150).

(28) Plug connector (A7P2) from self test assembly (266 or 266A) into connector (170) on external counter driver assembly (145 or 145A).

(29) Install glideslope assembly (130D,130E,103F or 130G) with screws (135 and 140). Apply staking compound (Ref. 11, Fig. 701) to thread of screws (135 and 140).

(30) Install voice warning assembly (115C,115D or 115E) with screws. (120 and 125). Apply staking compound (Ref. 11, Fig. 701) to threads of screws (120 and 125).

(31) Plug connector (105) from chassis harness into connector (A4P2) on voice warning assembly (115C,115D or 115E).

(32) Install monitor logic assembly (95 or 95A) with screws (100). Apply staking compound (Ref. 11, Fig. 701) to threads of screws (100).

(33) Plug connector (A7P2) from self test assembly (266 or 266A) into connector on monitor logic assembly (95).

(34) Install audio assembly (85 or 85A) with screws (90). Apply staking compound (Ref. 11, Fig. 701) to threads of screws (90).

(35) Plug connector (75) from chassis harness into connector on audio assembly (85 or 85A).

(36) Install comparator and closure warning assembly (65 or 65A) onto chassis hinge with four screws (70). Mate connector (35) with connector (A2P1) and secure with screw locks (p/o 35). Fold up assembly and install four screws (70) at top of assembly.

(37) Install power supply assembly (55 or 55A) onto chassis hinge with four screws (60). Mate connector (35) with connector (A1P1) and secure with screw locks (p/o 35). Fold up assembly and install four screws (60) at top of assembly.

(38) If insulators (15 and 20) require replacing, secure to cover with adhesive (Ref. 12, Fig. 701).

(39) Perform functional and calibration tests specified in Testing and Troubleshooting.

(40) Install cover (5) and secure with stud (25) and screw (10).

5. Storage Instructions

Figure 702 lists the materials required for storage.

NOTE: Equivalent substitutes may be used for all storage materials.

ITEM	MANUFACTURER/SPECIFICATION
1. Waterproof plastic bag.	Commercially available.
2. Corrugated carton with packing.	Commercially available.

Storage Materials
Figure 702

A. Temporary Storage

(1) Place the unit in a waterproof plastic bag.

(2) Seal open end of plastic bag.

(3) Store on rack away from vibration and shock.

(4) Temperature range should be between -65 degrees C to +70 degrees C (-85 degrees F to +158 degrees F).

B. Extended Storage

(1) Place the unit in a waterproof bag.

(2) Seal open end of plastic bag.

(3) Place unit, enclosed in sealed bag, into corrugated carton with packing.

NOTE: Use original shipping container if this container was retained.

(4) Store in a clean, dry area, away from vibration and shock.

(5) Control temperature range to -65 degrees C to +70 degrees C (-85 degrees F to +158 degrees F) with humidity not in excess of 95 percent.

FITS AND CLEARANCES

1. This section presents all fits and clearances that must be observed and maintained for the Ground Proximity Warning Computer to operate properly. Items included are assembly tolerances, clearances, etc. Figure 801 gives a description of the part, area, or major assembly; and illustrated parts list figure/index reference to aid in location; a description of the clearances, the tolerance that must be maintained; and a reference to the steps of the assembly procedure where this specification must be observed.

PART/AREA	ILLUSTRATED PARTS LIST FIG/INDEX	ADJUSTMENT AND TOLERANCE	ASSEMBLY PARAGRAPH REFERENCE
Diodes	12-15	Diode shall lay tight against body of indicator	4.B.(2)
Resistors and diodes	11-	Mount body of component 0.040 inch maximum above board.	4.C.(1)(a)
Transistors	11-	Mount top of component 0.370 inch maximum above board.	4.C.(1)(b)
CK05 and CK06 type capacitors	11-	Mount lead side of component 0.030 to 0.090 inch above board.	4.C.(1)(c)
Variable resistors	11-	Mount lead side of component 0.040 inch maximum above board.	4.C.(1)(d)
Resistors and diodes	9-	Mount body of component 0.040 inch maximum above board.	4.E.(1)(a)
Transistors	9-	Mount top of component 0.370 inch maximum above board.	4.E.(1)(b)
CK05 and CK06 type capacitors	9-	Mount lead side of component 0.030 to 0.090 inch above board.	4.E.(1)(c)

PART/AREA	ILLUSTRATED PARTS LIST FIG/INDEX	ADJUSTMENT AND TOLERANCE	ASSEMBLY PARAGRAPH REFERENCE
Variable resistors	9-	Mount lead side of component 0.030 to 0.060 inch above board.	4.E.(1)(d)
Resistors and diodes	8-	Mount body of component 0.040 inch maximum above board.	4.F.(1)(a)
Transistors	8-	Mount top of component 0.370 inch maximum above board.	4.F.(1)(b)
CK05 and CK06 type capacitors	8-	Mount lead side of component 0.030 to 0.090 inch above board.	4.F.(1)(c)
Resistors and diodes	7-	Mount body of component 0.040 inch maximum above board.	4.G.(1)(a)
Transistors	7-	Mount top of component 0.370 inch maximum above board.	4.G.(1)(b)
CK05 and CK06 type capacitors	7-	Mount lead side of component 0.030 to 0.090 inch above board.	4.G.(1)(c)
Resistors and diodes	5-	Mount body of component 0.040 inch maximum above board.	4.I.(1)(b)
Transistors	5-	Mount top of component 0.370 inch maximum above board.	4.I.(1)(c)
CK05 and CK06 type capacitors	5-	Mount lead side of component 0.030 to 0.060 inch above board.	4.I.(1)(d)

PART/AREA	ILLUSTRATED PARTS LIST FIG/INDEX	ADJUSTMENT AND TOLERANCE	ASSEMBLY PARAGRAPH REFERENCE
Diode (VR2) and resistor (R34)	5-75 5-100	Mount component in board and form leads over flat against circuit pattern before soldering.	4.I.(1)(g)
Resistors and diodes	4-	Mount body of component 0.040 inch maximum above board.	4.J.(1)(b)
Transistors	4-	Mount top of component 0.370 inch maximum above board.	4.J.(1)(c)
CK05 and CK06 type capacitors	4-	Mount lead side of component 0.030 to 0.060 inch above board.	4.J.(1)(d)
Variable resistors	4-	Mount lead side of component 0.030 to 0.060 inch above board.	4.J.(1)(e)
Capacitors (C6 and C10), diode (CR7) and resistors (R13, R14, R15, R36 and R43)	4-75 4-350 4-335 4-115 4-340 4-300 4-290	Mount component in board and terminate leads a maximum of 0.050 inch from board surface.	4.J.(1)(f)
Resistors and diodes	3-	Mount body of component 0.040 inch maximum above board.	4.K.(1)(a)
Transistors	3-	Mount top of component 0.370 inch maximum above board.	4.K.(1)(b)
CK05 and CK06 type capacitors	3-	Mount lead side of component 0.030 to 0.060 inch above board.	4.K.(1)(c)

PART/AREA	ILLUSTRATED PARTS LIST FIG/INDEX	ADJUSTMENT AND TOLERANCE	ASSEMBLY PARAGRAPH REFERENCE
Resistors and diodes	2-	Mount body of component 0.040 inch maximum above board.	4.L.(1)(b)
Transistors or optional voltage regulators	2-	Mount top of component 0.370 inch maximum above board.	4.L.(1)(c)
CK05 and CK06 type capacitors	2-	Mount lead side of component 0.030 to 0.060 inch above board.	4.L.(1)(d)
Variable resistors	2-	Mount lead side of component 0.030 to 0.060 inch above board.	4.L.(1)(e)

Fits and Clearances
Figure 801 (Sheet 4 of 4)

SPECIAL TOOLS, FIXTURES, AND EQUIPMENT

1. General

Figure 901 lists the special tools, fixtures, and equipment required to overhaul, test, calibrate and troubleshoot the GPWC.

Note that Figure 901 includes two series of testers, items 1 and 2. The GPWC may be tested with either tester and the associated equipment listed with the tester.

The two series of testers differ in that the 951-0192 series testers are capable of testing the GPWC completely assemblied and each printed wiring assembly A1 through A6 independently. The 951-0190 series testers are capable of only testing the GPWC completely assemblied.

NOTE: Equipment with equal or better applicable performance characteristics may be used as a substitute for the equipment listed.

	EQUIPMENT AND TYPE	SOURCE AND REMARKS
1.	Tester, GPWC - Part No. 951-0192-001 (without synchro)	Sundstrand Data Control Inc. See Note 1.
	Tester, GPWC - Part No. 951-0192-002 (with Synchro capability)	Sundstrand Data Control Inc. See Note 2.
	Tester, GPWC - Part No. 951-0192-003 (without synchro)	Sundstrand Data Control Inc. See Note 3.
	Tester, GPWC - Part No. 951-0192-004 (without synchro)	Sundstrand Data Control Inc. See Note 1.
	Tester, GPWC - Part No. 951-0192-005 (without synchro)	Sundstrand Data Control Inc. See Note 3.
	Tester, GPWC - Part No. 951-0192-006 (without synchro)	Sundstrand Data Control See Note 3.
	Computer Auxiliary Test Fixture, Part No. 649-0421-001	Part of 951-0192 series testers
	Comparator/PWR Supply/Audio Auxiliary Test Fixture Parr No. 649-0419-001	
	Synchro Demod Auxiliary Test Fixture Part No. 649-0418-001	

	EQUIPMENT AND TYPE	SOURCE AND REMARKS
	Monitor Logic Auxiliary Test Fixture, Part No. 649-0422-001	Part of 951-0192 series testers
	Glideslope Auxiliary Test Fixture, Part No. 649-0420-001	
	Cable Assembly, Part No. 704-0781-001	
	115 vac, 400 Hz, 50 VA minimum capacity power source.	Commercially available - adjustable to 114 to 120 vac.
	Signal Generator - Model 3311A	Hewlett Packard Company 1501 Page Mill Road Palo Alto, Calif. 94304
	Digital Voltmeter (DVM) Model 8800A	John Fluke Mfg. Co. P.O. Box 7428 Seattle, Wash. 98133
	Oscilloscope - Model 503	Tektronic Inc. P.O. Box 500 Beaverton, Oregon 97005
	Frequency Counter - Model 5325B (1 microsecond capability)	Hewlett Packard Company 1501 Page Mill Road Palo Alto, Calif. 74304
	Stopwatch	Commercially available - 0.1 second accuracy
	Plug, Part No. 021-4006-00-0-919 (mates with jacks on test fixtures)	Sealector Corp. 225 Hoyt Mamceroneck, N.Y. 10544
2.	Tester, GPWC - Part No. 951-0190-001 (without synchro)	Sundstrand Data Control, Inc. See Note 4.
	Tester, GPWC - Part No. 951-0190-002 (with synchro capability)	Sundstrand Data Control, Inc. See Note 5.
	Tester GPWC - Part No. 951-0190-006 (without synchro)	Sundstrand Data Control, Inc. See Note 4.

EQUIPMENT AND TYPE	SOURCE AND REMARKS
115 vac, 400 Hz, 50 VA minimum capacity power source.	Commercially available - adjustable from 70 to 120 vac.
Multimeter - Model 630 APL	Triplett Electrical Instrument Co. Buffton, Ohio 97005
Fixed resistor, 8 ohm, 5%, 2 watt	Commercially available
Digital Voltmeter (DVM)	Same as item 1.
Oscilloscope	Same as item 1.
Stopwatch	Same as item 1.
Signal Generator	Same as item 1.
Plug, Part No. 021-4006-00-0-919 (mates with jacks on tester, Part No. 951-0190-XXX).	Same as item 1.

NOTES:

1. Tester, Part Nos. 951-0192-001 and -004 will test models 070, 071, 072, 079 and 081.
2. Tester, Part No. 951-0192-002 is required for testing model 073, however, it will also test models 070, 071, 072, 079 and 081.
3. Tester, Part Nos. 951-0192-003, -005 and -006 will test models 070, 071, 072, 079, 081 and 087.
4. Tester, Part Nos. 951-0190-001 and -006 will test models 070,071,072, 079, 081 and 084.
5. Tester, Part No. 951-0190-002 is required for testing model 073, however, it will also test models 070, 071, 072, 079, 081 and 087.

Special Tools, Fixtures and Equipment
Figure 901 (Sheet 3 of 3)

COMPONENT MAINTENANCE MANUAL
PART NO. 965-0376

ILLUSTRATED PARTS LIST

1. Introduction

A. The Illustrated Parts List provides a breakdown of the equipment covered by this manual. All parts are listed in order of disassembly, showing relationships of higher and lower assemblies, and are identified by corresponding index numbers on illustrations.

B. All items are assigned an item number. Items listed but not illustrated are identified by a - preceding the item number.

C. For identification of detail parts and assemblies, the nomenclature column employs the indenture system. Each assembly is listed with its detail parts listed in the next indenture below and to the right. Conversely, the next higher assembly of any detail part may be determined by its location in the indenture above and to the left.

D. Attaching parts immediately follow the part or assembly which they attach, and have the same indenture. They are introduced by the words ATTACHING PARTS, and their conclusion is indicated by the symbol ***.

E. Usage codes will appear in EFFECT CODE column. If applicable, the usage code is used at the first listing of an assembly, all parts with same usage code are common to that assembly only. When no usage code appears in the EFFECT CODE column, all parts are common to the assembly to which they are indentured.

F. Unless otherwise indicated by a vendor code number in parentheses following the part name in the parts list, all parts are either commercial standard, military standard, or Sundstrand Data Control parts.

G. Manufacturers' Code, Name and Address:

CODE	NAME AND ADDRESS
V00348	Microtran Co., Inc. 145 East Mineola Ave. Valley Stream, N.Y. 11582
V01121	Allen Bradley Co. 1201 S. 2nd St., Milwaukee, Wisc. 53204
V01295	Texas Instruments Inc. Semiconductor Components Div. 13500 N. Central Expressway Dallas, Texas 75231
V03296	Nylon Molding Corp. 40 Brown St., Springfield, New Jersey 07081
V03797	Eldema Corp. 18435 Susanna Road Compton, Calif.
V03888	Pyrofilm Resistor Co. Inc. 3 Saddle Road Cedar Knolls, N. J. 07927
V04713	Motorola Semiconductor Products, Inc. 5005 East McDowell Road Phoenix, Arix. 85008
V06090	Raychem Corp. 300 Constitution Drive Menlo Park, Calif. 94025
V07479	Miniature Electronic Components Corp. 600 So. Street Holbrook, Mass. 02343
V08289	Blinn Delbert Co., Inc. 1678 E. 5th Ave. P. O. Box 2007 Pomona, Calif. 91766
V08795	Rayclad Tubes Inc. 300 Constitution Drive Menlo Park, Calif. 94025
V09651	Harris Corp. P. O. Box 84 Grafton, Wisc. 53024
V11532	Teledyne Relays A Teledyne Co. 3155 W. El Segundo Blvd. Hawthorne, Calif. 90250
V11537	Sartron Inc. 114 N. Main St. New Berg, Oregon 97132
V12040	National Semiconductor Corp. Commerce Drive P. O. Box 443 Danbury, Conn. 06810
V12517	Component Research Co. Inc. 1717 19th St. Santa Monica, Calif. 90404
V12969	Unitrode Corp. 580 Pleasant St. Watertown, Mass. 02172
V14752	Electro Cube Inc. 1710 S. Del Mar Ave. San Gabriel, Calif. 91776
V14936	General Instrument Corp. Semiconductor Products Group P. O. Box 600 600 W. John St. Hicksville, N. Y. 11802
V18324	Signetics Corp. 811 East Argues Ave. Sunnyvale, Calif. 94086
V18583	Curtis Instrument Inc. 351 Lexington Mount Kisco, N. Y. 10549
V24176	Teledyne Inc. 1901 Ave. of Stars Los Angeles, Calif. 90067

CODE	NAME AND ADDRESS
V27014	National Semiconductor Corp. 2950 San Ysidro Way Santa Clara, Calif. 95051
V31781	Elco Connectors/Canada/Ltd. 2 Thorncliffe Pk. Dr. Toronto, Ontario, Canada
V32997	Bourns Inc. Trimpot Products Div. 1200 Columbia Ave. Riverside, Calif. 92507
V44028	North American Phillips Co. Inc. 100 E. 42nd New York, N. Y. 10017
V50507	Micro Networks Corp. 5 Barbara Lane Worcester, Ma. 01604
V56289	Sprague Electric Co. North Adams, Mass. 01247
V59730	Thomas and Betts Co. 36 Butler St. Elizabeth, N. J. 07207
V65035	Westinghouse Air Brake Co. Fluid Power Div. 1953 Mercer Rd. Lexington, Ky 40505
V71468	ITT Cannon Electric Inc. 3208 Humbolt St. Los Angeles, Calif. 90031
V72259	Nytronics Inc. 10 Pelham Parkway Pelham Manor, N. Y. 10803
V72794	Dzus Fastener Co., Inc. 425 Union Blvd. West Islip, N. Y. 11795
V77820	Bendix Corp., The Electrical Components Div. Sherman Ave. Sidney, N. Y. 13838
V83008	Staco Inc. 2240 E. 3rd St. Dayton, Ohio 45403
V83330	Smith Herman H. Inc. 812 Snediker Ave. Brooklyn, N.Y. 11207
V84411	TRW Capacitor Div. 112 W. First Street Ogallala, Nebraska
V86928	Seastrom Mfg. Co. Inc. 701 Sonora Ave. Glendale, Calif. 91201
V88245	Litton Precision Products Inc. USECO Div. Litton Industries 13536 Saticoy St. Van Nuys, Calif. 91409
V91662	Elco Corp. Maryland Rd. & Computer Ave. Willow Grove, Pa. 19090
V95146	Alco Electronic Products Inc. P. O. Box 1348 Lawrence, Ma. 01842
V95238	Continental Connector Corp. 34-63 56th St. Woodside, N. Y. 11377
V98159	Rubber Teck Inc. P. O. Box 389 Gardena, Calif. 90247

2. Equipment Designator Index

The equipment designator index contains the equipment designators for components shown in the schematic diagram. These designators are arranged in alpha-numerical order.

3. Numerical Index

The numerical index includes a complete listing of all parts in the Illustrated Parts List arranged in alpha-numerical order.

EQUIPMENT DESIGNATOR	FIG. ITEM
A1	1 55
	2 -1
	1 55A
	2 -1A
A1BR1	2 290
A1CR1	2 140
A1CR2	2 140
A1CR3	2 65
A1CR4	2 355
	2 355A
A1CR5	2 355
	2 355A
A1CR6	2 355
	2 355A
A1CR7	2 355B
A1CR8	2 355
	2 355A
A1CR9	2 355
	2 355A
A1CR10	2 355
	2 355A
A1CR11	2 355
	2 355A
A1CR12	2 355
	2 355A
A1CR13	2 140
A1CR14	2 355
	2 355A
A1CR15	2 355
	2 355A
A1CR16	2 355
	2 355A

EQUIPMENT DESIGNATOR	FIG. ITEM
A1CR17	2 355
	2 355A
A1CR18	2 355
	2 355A
A1CR19	2 355
	2 355A
A1CR20	2 355
	2 355A
A1CR21	2 140
A1CR22	2 355
	2 355A
A1CR23	2 355
	2 355A
A1CR24	2 355
	2 355A
A1CR25	2 355
	2 355A
A1CR26	2 355
	2 355A
A1CR27	2 355
	2 355A
A1CR28	2 355
	2 355A
A1CR29	2 355
	2 355A
A1CR30	2 65
	2 65A
A1CR31	2 65
	2 65A
A1CR32	2 355
	2 355A
A1CR33	2 355

EQUIPMENT DESIGNATOR	FIG. ITEM
	2 355A
A1CR34	2 355
	2 355A
A1CR35	2 355
	2 355A
A1CR36	2 355
	2 355A
A1CR37	2 355
	2 355A
A1CR38	2 355
	2 355A
A1CR39	2 355
	2 355A
A1CR40	2 355
	2 355A
A1CR41	2 355
	2 355A
A1CR42	2 355
	2 355A
A1CR43	2 355
	2 355A
A1CR44	2 355
	2 355A
A1CR45	2 140
A1CR46	2 355
	2 355A
A1CR47	2 355
	2 355A
A1CR48	2 355
	2 355A

-Item not Illustrated

EQUIPMENT DESIGNATOR	FIG. ITEM
A1CR49	2 140
A1CR50	2 355
	2 355A
A1CR51	2 355
	2 355A
A1CR52	2 355
	2 355A
A1CR53	2 170
A1CR54	2 170
A1CR5	2 355A
A1CR56	2 355A
A1CR57	2 355A
A1C1	2 395
A1C2	2 400
A1C3	2 50
A1C4	2 50
A1C5	2 360
A1C6	2 50
A1C7	2 55
A1C8	2 320
A1C9	2 325A
A1C10	2 395
A1C11	2 400
A1C12	2 55
A1C13	2 135
A1C14	2 135
A1C15	2 350
A1C16	2 350
A1C17	2 395
A1C18	2 160
A1C19	2 395
A1C20	2 135
A1C21	2 135
A1C22	2 350
A1C23	2 395
A1C24	2 350
A1C25	2 160
A1C26	2 395
A1C27	2 350
A1C28	2 350
A1C29	2 350
A1C30	2 350
A1C31	2 350
A1C32	2 350
A1K1	2 130
A1P1	2 430
A1P2	2 440
A1Q1	2 75
A1Q2	2 40
A1Q3	2 40
A1Q4	2 40
A1Q5	2 25
A1Q6	2 385
A1Q7	2 40
A1Q8	2 40
A1Q9	2 40
A1Q10	2 40
A1Q11	2 385
A1Q12	2 385
A1Q13	2 40
A1Q14	2 385
A1Q15	2 310
A1Q16	2 385
A1Q17	2 310
A1Q18	2 385
A1Q19	2 40
A1Q20	2 285
A1Q21	2 40
A1Q22	2 385
A1Q23	2 310
A1Q24	2 40
A1R1	2 375
A1R2	2 85
A1R3	2 30
A1R4	2 15
A1R5	2 5
A1R6	2 10
A1R7	2 380
A1R8	2 375
A1R9	2 375
A1R10	2 35
A1R11	2 30
A1R12	2 20
A1R13	2 5
A1R14	2 345
A1R15	2 390
A1R16	2 110
A1R17	2 90
A1R18	2 95
A1R19	2 70
A1R20	2 106
A1R21	2 330
A1R22	2 390
	2 390A
A1R23	2 390
	2 390A
A1R24	2 426
A1R25	2 410
A1R26	2 335
A1R27	2 365
A1R28	2 120
A1R29	2 115
A1R30	2 106
A1R31	2 85
A1R32	2 115
A1R33	2 90
A1R34	2 106
A1R35	2 375
A1R36	2 80
A1R37	2 390
	2 390A
A1R38	2 370
A1R39	2 365
A1R40	2 110
A1R41	2 375
A1R42	2 405
A1R43	2 155
A1R44	2 390
	2 390A
A1R45	2 375
A1R46	2 90
A1R47	2 375
A1R48	2 415
A1R49	2 315
A1R50	2 390
	2 390A
A1R51	2 155
A1R52	2 375
A1R53	2 390
	2 390A
A1R54	2 380
A1R55	2 425
A1R56	2 60

-Item not Illustrated

EQUIPMENT DESIGNATOR	FIG. ITEM
A1R57	2 390
	2 390A
A1R58	2 380
A1R59	2 420
A1R60	2 105
A1R61	2 155
A1R62	2 155
A1R63	2 150
A1R64	2 110
A1R65	2 365
A1R66	2 80
A1R67	2 390
	2 390A
A1R68	2 365
A1R69	2 335
A1R70	2 340
A1R71	2 390
	2 390A
A1R72	2 155
A1R73	2 230
A1R74	2 225
A1R75	2 175
A1R76	2 280
A1R77	2 275
A1R78	2 180
A1R79	2 390
	2 390A
A1R80	2 230
A1R81	2 225
A1R82	2 175
A1R83	2 375
A1R84	2 105
A1R85	2 110
A1U1	2 305
A1U2	2 295
A1U3	2 295
A1U4	2 295
A1U5	2 125
A1U6	2 300
A1U7	2 125
A1U8	2 45
A1VR1	2 100
A1VR2	2 100
A1VR3	2 100
A1VR5	2 145
A1VR6	2 145
A1VR7	2 235

EQUIPMENT DESIGNATOR	FIG. ITEM
A1VR7	2 235A
A1VR8	2 180
	2 180A
A2	1 165
A2	1 65B
	3 -1B
	1 65C
	3 -1C
A2AR1	3 190
A2AR2	3 190
A2AR3	3 190
A2A1	3 510
A2A1CR1	3 570
A2A1CR2	3 570
A2A1Q1	3 550
A2A1Q2	3 550
A2A1Q3	3 540
A2A1Q4	3 540
A2A1R1	3 585
A2A1R2	3 580
A2A1R3	3 560
A2A1R4	3 575
A2A1R5	3 565
A2A1R6	3 565
A2A1R7	3 555
A2A1R8	3 595
	thru 612
A2A1R9	3 535
A2A1R10	3 595
	thru 612
A2A1R11	3 555
A2A1R12	3 535
A2A1R13	3 545
A2A1R14	3 590
A2A1R15	3 585
A2CR2	3 400
	3 400A
A2CR3	3 400
	3 400A
A2CR4	3 400
	3 400A
A2CR5	3 10
A2CR6	3 10
A2CR7	3 400
	3 400A
A2CR8	3 400
	3 400A

EQUIPMENT DESIGNATOR	FIG. ITEM
A2CR9	3 10
A2CR10	3 10
A2CR11	3 10
A2CR12	3 10
A2CR13	3 400
	3 400A
A2CR14	3 400
	3 400A
A2CR15	3 400
	3 400A
A2CR16	3 400
	3 400A
A2CR17	3 10
A2CR18	3 400
	3 400A
A2CR19	3 400
	3 400A
A2CR20	3 10
A2CR21	3 400
	3 400A
A2CR22	3 400
	3 400A
A2CR23	3 400
	3 400A
A2CR24	3 400
	3 400A
A2CR25	3 400
	3 400A
A2CR26	3 400
	3 400A
A2CR27	3 400
	3 400A
A2CR28	3 400
	3 400A
A2CR29	3 400
	3 400A
A2CR30	3 400
A2CR31	3 400
	3 400A
A2CR32	3 400
	3 400A
A2CR33	3 296
A2C1	3 155
A2C2	3 415
A2C3	3 225
A2C4	3 360
A2C5	3 275
A2C6	3 195
A2C7	3 415
A2C8	3 275

-Item not Illustrated

EQUIPMENT DESIGNATOR	FIG. ITEM
A2C9	3 415
A2C10	3 360
A2C11	3 360
A2C12	3 360
A2C13	3 360
A2C14	3 360
A2C15	3 360
A2C16	3 360
A2C17	3 360
A2C18	3 360
A2C19	3 360
A2C20	3 360
A2C21	3 360
A2C22	3 225
A2C23	3 375
A2C24	3 415
A2C25	3 360
A2C26	3 360
A2J1	3 490
A2Q1	3 165
A2Q2	3 165
A2Q3	3 165
A2Q4	3 300
A2Q5	3 300
A2Q6	3 300
A2Q7	3 300
A2Q8	3 165
A2Q9	3 105
A2R8	3 435
A2R9	3 140
A2R10	3 405
A2R11	3 140
A2R12	3 350
A2R13	3 355
A2R14	3 5
A2R15	3 170
A2R16	3 355
A2R17	3 175
A2R18	3 355
A2R19	3 355
A2R20	3 355
A2R21	3 160
A2R22	3 150
A2R23	3 385
A2R24	3 145
A2R25	3 420
A2R26	3 220
A2R27	3 355
A2R28	3 220
A2R29	3 355
A2R30	3 50
A2R31	3 25
A2R32	3 25
A2R34	3 35
A2R35	3 5
A2R36	3 30
A2R37	3 355
A2R38	3 5
A2R39	3 15
A2R40	3 20
A2R41	3 65
A2R42	3 70
A2R43	3 75
A2R44	3 385
A2R45	3 425
A2R46	3 200
A2R47	3 185
A2R48	3 185
A2R49	3 185
A2R50	3 215
A2R51	3 435
	3 435A
A2R52	3 130
A2R53	3 265
A2R54	3 350
A2R55	3 450
A2R56	3 365
A2R57	3 365
A2R58	3 455
A2R59	3 290
A2R60	3 285
A2R61	3 250
A2R62	3 245
A2R63	3 235
A2R64	3 135
A2R65	3 230
A2R66	3 90
A2R67	3 425
A2R68	3 355
A2R69	3 240
A2R70	3 355
A2R71	3 425
A2R72	3 355
A2R73	3 135
A2R74	3 135
A2R75	3 450
A2R76	3 445
A2R77	3 125
A2R78	3 350
A2R81	3 120
A2R82	3 45
	3 45A
A2R83	3 60
A2R84	3 385
A2R85	3 390
A2R86	3 410
A2R87	3 355
A2R88	3 405

-Item not Illustrated

EQUIPMENT DESIGNATOR	FIG. ITEM
A2R89	3 405
A2R90	3 405
A2R91	3 350
	3 350A
A2R92	3 180
A2R93	3 405
A2R94	3 215
A2R95	3 205
A2R96	3 435
A2R97	3 440
A2R98	3 350
A2R99	3 355
A2R100	3 305
A2R101	3 355
A2R102	3 310
A2R103	3 425
A2R104	3 445
A2R105	3 290
A2R106	3 295
A2R106	3 295A
A2R107	3 40
A2R108	3 345
A2R109	3 80
A2R110	3 465
A2R111	3 80
A2R112	3 465
A2R113	3 365
A2R114	3 90
A2R115	3 350
A2R116	3 405
A2R117	3 350
A2R118	3 350
A2R119	3 410
A2R120	3 95A
	3 295
A2R121	3 420
A2R122	3 100
	3 100A
A2R123	3 110
A2R124	3 385
A2R125	3 130
A2R126	3 460
A2R127	3 355
A2R128	3 95
	3 95A
A2R129	3 45A
	3 95
A2R130	3 355
A2R131	3 350
A2R132	3 385
A2R133	3 115
A2R134	3 80
A2R135	3 480
A2R136	3 285
A2R137	3 395
A2R138	3 380
A2R139	3 370
A2R140	3 480
A2R141	3 325
A2R142	3 320
A2R143	3 355
A2R144	3 445
A2R145	3 475
A2R146	3 470
A2R147	3 485
A2R148	3 445
A2R149	3 320
A2R150	3 340
A2R151	3 330
A2R152	3 320
A2R153	3 335
A2R154	3 445
A2R155	3 315
A2R156	3 425
A2R157	3 320
A2R158	3 355
A2R159	3 445
A2R160	3 350
A2R161	3 270
A2R162	3 95
	3 95B
A2R163	3 430
A2R164	3 350
A2R165	3 350
A2R166	3 101
A2U1	3 55
A2U2	3 55
A2U3	3 55
A2U4	3 55
A2U5	3 55
A2U6	3 55
A2U7	3 85
A3	1 85
	4 -1
	1 85A
	4 -1A
A3CR1	4 385
A3CR2	4 335
A3CR3	4 335
A3CR4	4 335
A3CR5	4 335
A3CR6	4 335
A3CR7	4 335
A3CR8	4 335
A3CR9	4 335
A3CR12	4 335
A3CR14	4 390
A3CR15	4 335
A3CR16	4 335
A3CR18	4 335

-Item not Illustrated

EQUIPMENT DESIGNATOR	FIG. ITEM
A3CR19	4 385
A3CR20	4 385
A3CR21	4 385
A3CR22	4 385
A3CR23	4 385
A3CR24	4 235
A3CR25	4 390
A3CR26	4 395
A3CR27	4 335
A3C1	4 355
A3C2	4 355
A3C3	4 355
A3C4	4 355
A3C5	4 350
A3C6	4 350
A3C7	4 100A
	4 100
A3C8	4 345
A3C9	4 355
A3C10	4 345
A3C11	4 345
A3C12	4 380
A3C13	4 305
A3C14	4 345
A3C15	4 345
A3C16	4 75
A3C17	4 260
A3C18	4 260
A3C19	4 260
A3C20	4 380
A3C21	4 365
A3C22	4 370
A3C23	4 365
A3C24	4 355
A3C25	4 355
A3C26	4 225
A3C27	4 365
A3C28	4 345
A3C29	4 345
A3C30	4 345
A3C31	4 345
A3C32	4 345
A3C33	4 345
A3C34	4 355

EQUIPMENT DESIGNATOR	FIG. ITEM
A3C35	4 365
A3C36	4 365
A3C37	4 355
A3C38	4 355
A3C39	4 380
A3K1	4 265
A3M1	4 210
A3P1	4 465
A3P2	4 455
A3Q1	4 430
A3Q2	4 430
A3Q3	4 95
A3Q4	4 95
A3Q5	4 95
A3Q10	4 270
A3Q11	4 270
A3Q12	4 270
A3Q13	4 95
A3Q14	4 95
A3Q15	4 425
A3Q16	4 430
A3Q17	4 425
A3R1	4 165
A3R2	4 170
A3R3	4 170
A3R4	4 165
A3R5	4 155
A3R6	4 155
A3R7	4 175
A3R8	4 175
A3R9	4 125
A3R10	4 140
A3R11	4 325
A3R12	4 325
A3R13	4 110
A3R14	4 340
A3R15	4 340
A3R16	4 250
A3R17	4 250
A3R18	4 250
A3R19	4 160
A3R20	4 160
A3R21	4 415
A3R22	4 410

EQUIPMENT DESIGNATOR	FIG. ITEM
A3R23	4 85
A3R24	4 105
A3R25	4 115
A3R26	4 115
A3R27	4 90
A3R28	4 90
A3R29	4 90
A3R30	4 340
A3R31	4 340
A3R32	4 340
A3R33	4 340
A3R34	4 340
A3R35	4 300
A3R36	4 300
A3R37	4 310
A3R38	4 310
A3R39	4 70
A3R40	4 330
A3R41	4 70
A3R42	4 295
A3R43	4 290
A3R44	4 281
A3R45	4 285
A3R46	4 280
A3R47	4 280
A3R48	4 66
A3R49	4 66
A3R50	4 255
A3R51	4 255
A3R52	4 250
A3R53	4 250
A3R54	4 340
A3R55	4 90
A3R56	4 90
A3R57	4 140
A3R58	4 145
A3R59	4 90
A3R60	4 135
A3R61	4 135
A3R62	4 160
A3R63	4 125
A3R64	4 130
A3R65	4 90
A3R66	4 65

-Item not Illustrated

EQUIPMENT DESIGNATOR	FIG.	ITEM
A3R67	4	65
A3R68	4	65
A3R69	4	120
A3R70	4	80
A3R71	4	66
A3R72	4	90
A3R73	4	180
A3R74	4	185
A3R75	4	190
A3R76	4	205
A3R77	4	145
A3R78	4	90
A3R79	4	195
A3R80	4	340
A3R81	4	340
A3R82	4	160
A3R83	4	90
A3R84	4	90
A3R85	4	110
A3R86	4	25
A3R87	4	25
A3R88	4	105
A3R89	4	240
A3R90	4	240
A3R91	4	400
A3R92	4	405
A3R93	4	246
A3R94	4	420
A3R95	3	340
A3R96	4	410
A3R97	4	90
A3R98	4	150
A3R99	4	410
A3R100	4	320
A3R101	4	245
A3R102	4	406
A3T1	4	435
A3T2	4	435
A3T3	4	5
A3U1	4	375
A3U2	4	220
A3U3	4	375
A3U4	4	230
A3U5	4	315
A3U6	4	30
A3U7	4	360
A3U8	4	360
A3VR10	4	275
A3VR11	4	275
A3VR17	4	275
A4	1	115C
	9	-1D
	1	115D
	9	-1E
	1	115E
	10	-1A
A4A1	9	-1
	10	35
	9	5
A4A1CR1	9	60
A4A1CR2	9	335
A4A1CR3	9	335
A4A1CR4	9	60
A4A1CR6	9	60
A4A1CR7	9	60
A4A1CR8	9	60
A4A1CR9	9	60
A4A1CR10	9	60
A4A1CR11	9	60
A4A1CR12	9	60
A4A1CR13	9	60
A4A1CR14	9	60
A4A1CR15	9	285A
A4A1C1	9	36
A4A1C1	9	50
A4A1C2	9	50
A4A1C3	9	50
A4A1C4	9	345
A4A1C5	9	50
A4A1C6	9	50
A4A1C7	9	145
A4A1C8	9	50
A4A1C9	9	50
A4A1C10	9	105
A4A1C11	9	340
A4A1C12	9	340
A4A1C13	9	105
A4A1C14	9	230
A4A1C15	9	105
A4A1C16	9	170
A4A1C17	9	170
A4A1C18	9	180
A4A1C19	9	310
A4A1C20	9	110
A4A1C21	9	50
A4A1C22	9	50
A4A1C23	9	50
A4A1C24	9	50
A4A1C25	9	50
A4A1C26	9	50
A4A1C27	9	50
A4A1C28	9	50
A4A1C29	9	50
A4A1C30	9	50
A4A1C31	9	150
A4A1C32	9	111
A4A1J1	9	371
A4A1J2	9	350
A4A1J3	9	350
A4A1L1	9	185
A4A1P1	9	360
A4A1P2	9	355
A4A1P1	9	40
A4A1P2	9	40
A4A1Q1	9	126
A4A1Q2	9	135
A4A1Q3	9	125
A4A1Q4	9	135
A4A1R1	9	55
A4A1R2	9	55
A4A1R3	9	325
A4A1R4	9	55
A4A1R5	9	325
A4A1R6	9	330
A4A1R7	9	55
A4A1R9	9	295
A4A1R10	9	255
A4A1R11	9	320
A4A1R12	9	55

-Item not Illustrated

EQUIPMENT DESIGNATOR	FIG. ITEM
A4A1R13	9 330
A4A1R14	9 55
A4A1R15	9 55
A4A1R16	9 130
A4A1R17	9 275
A4A1R18	9 55
A4A1R19	9 55
A4A1R20	9 80
A4A1R21	9 55
A4A1R22	9 80
A4A1R23	9 55
A4A1R24	9 235
A4A1R25	9 80
A4A1R26	9 240
A4A1R27	9 225
A4A1R28	9 220
A4A1R29	9 55
A4A1R30	9 55
A4A1R31	9 55
A4A1R32	9 55
A4A1R33	9 55
A4A1R34	9 55
A4A1R35	9 55
A4A1R36	9 55
A4A1R37	9 55
A4A1R38	9 55
A4A1R39	9 55
A4A1R40	9 55
A4A1R41	9 55
A4A1R42	9 55
A4A1R43	9 55
A4A1R44	9 55
A4A1R45	9 155
A4A1R46	9 160
A4A1R47	9 80
A4A1R48	9 55
A4A1R49	9 55
A4A1R50	9 55
A4A1R51	9 55
A4A1R52	9 55
A4A1R53	9 165
A4A1R54	9 255
A4A1R55	9 205
A4A1R56	9 305
A4A1R57	9 305
A4A1R58	9 305
A4A1R59	9 190
A4A1R60	9 165
A4A1R61	9 175
A4A1R62	9 235
A4A1R63	9 195
A4A1R64	9 200
A4A1R65	9 300
A4A1R66	9 55
A4A1R67	9 120
A4A1R69	9 55
A4A1R70	9 55
A4A1R71	9 71
A4A1R72	9 80
A4A1U1	9 30
A4A1U1	9 65
A4A1U2	9 35
A4A1U2	9 70
A4A1U3	9 75
A4A1U4	9 85
A4A1U5	9 90
A4A1U6	9 100
A4A1U7	9 140
A4A1U8	9 210
A4A1U9	9 315
A4A1U10	9 95
A4A1U11	9 95
A4A1U12	9 290
A4A1U13	9 280
A4A1U14	9 270
A4A1U15	9 265
A4A1U16	9 215
A4A1U17	9 215
A4A1U18	9 215
A4A1U19	9 260
A4A1U20	9 250
A4A1U21	9 245
	9 245A
A4A2	10 5
	11 -1
A4A2AR1	11 20
A4A2AR2	11 20
A4A2CR1	11 25
A4A2CR2	11 25
A4A2CR3	11 80
A4A2CR4	11 80
A4A2CR5	11 80
A4A2CR6	11 25
A4A2CR7	11 25
A4A2CR8	11 25
A4A2CR9	11 25
A4A2CR10	11 25
A4A2CR11	11 25
A4A2CR12	11 25
A4A2CR13	11 25
A4A2CR14	11 25
A4A2CR15	11 25
A4A2C1	11 160
A4A2C2	11 160
A4A2C3	11 105
A4A2C4	11 210
A4A2C5	11 210
A4A2C6	11 180
A4A2C7	11 105
A4A2C8	11 180
A4A2C9	11 60
A4A2C10	11 60
A4A2C11	11 45
A4A2C12	11 45
A4A2C13	11 15
A4A2C14	11 15
A4A2C15	11 200
A4A2C16	11 200
A4A2C17	11 206
A4A2C18	11 180
A4A2Q1	11 65
A4A2Q2	11 65
A4A2Q3	11 65
A4A2Q4	11 55
A4A2Q5	11 70
A4A2R1	11 120
A4A2R2	11 120
A4A2R3	11 120
A4A2R4	11 120
A4A2R5	11 135
A4A2R6	11 140
A4A2R7	11 90

-Item not Illustrated

EQUIPMENT DESIGNATOR	FIG. ITEM
A4A2R8	11 190
A4A2R9	11 155
A4A2R10	11 145
A4A2R11	11 85
A4A2R12	11 95
A4A2R13	11 85
A4A2R14	11 50
A4A2R15	11 195
A4A2R16	11 120
A4A2R17	11 120
A4A2R18	11 96
A4A2R19	11 96
A4A2R20	11 90
A4A2R21	11 190
A4A2R22	11 155
A4A2R23	11 145
A4A2R24	11 85
A4A2R25	11 95
A2A2R26	11 50
A4A2R17	11 195
A4A2R28	11 165
A4A2R29	11 85
A4A2R30	11 75
A4A2R31	11 85
A4A2R32	11 190
A4A2R33	11 85
A4A2R34	11 85
A4A2R35	11 10
A4A2R36	11 195
A4A2R37	11 90
A4A2R38	11 190
A4A2R39	11 185
A4A2R40	11 115
A4A2R41	11 30
A4A2R42	11 165
A4A2R43	11 120
A4A2R44	11 170
A4A2R45	11 10
A4A2R46	11 10
A4A2R47	11 96
A4A2R48	11 110
A4A2R49	11 100
A4A2R50	11 120
A4A2R51	11 120

EQUIPMENT DESIGNATOR	FIG. ITEM
A4A2R52	11 125
A4A2R53	11 90
A4A2R54	11 190
A4A2R55	11 185
A4A2R56	11 30
A4A2R57	11 115
A4A2R58	11 170
A4A2R59	11 10
A4A2R60	11 10
A4A2R61	11 110
A4A2R62	11 96
A4A2R63	11 100
A4A2R64	11 30
A4A2R65	11 35
A4A2R66	11 40
A4A2R67	11 5
A4A2R68	11 5
A4A2R69	11 30
A4A2R70	11 35
A4A2R71	11 10
A4A2R72	11 5
A4A2R73	11 5
A4A2R74	11 10
A4A2R75	11 40
A4A2R76	11 50
A4A2R77	11 50
A4A2R78	11 225
A4A2R79	11 220
A4A2R80	11 215
A4A2R81	11 85
A4A2R82	11 90
A4A2R83	11 10
A4A2R84	11 130
A4A2R85	11 130
A4A2R86	11 85
A4A2R87	11 85
A4A2U1	11 175
A4A2U2	11 175
A4A2U3	11 205
A4A2VR1	11 150
A4A2VR2	11 150
A4CR1	9 60
A4CR2	9 335
A4CR3	9 335

EQUIPMENT DESIGNATOR	FIG. ITEM
A4CR4	9 60
A4CR6	9 60
A4CR7	9 60
A4CR8	9 60
A4CR9	9 60
A4CR10	9 60
A4CR11	9 60
A4CR12	9 60
A4CR13	9 60
A4CR14	9 60
A4CR15	9 285A
A4C1	9 50
A4C2	9 50
A4C3	9 50
A4C4	9 345
A4C5	9 50
A4C6	9 50
A4C7	9 145
A4C8	9 50
A4C9	9 50
A4C10	9 105
A4C11	9 340
A4C12	9 340
A4C13	9 105
A4C14	9 230
A4C15	9 105
A4C16	9 170
A4C17	9 170
A4C18	9 180
A4C19	9 310
A4C20	9 110
A4C21	9 50
A4C22	9 50
A4C23	9 50
A4C24	9 50
A4C25	9 50
A4C26	9 50
A4C27	9 50
A4C28	9 50
A4C29	9 50
A4C30	9 50
A4C31	9 150
A4C32	9 111
A4J1	9 371

-Item not Illustrated

EQUIPMENT DESIGNATOR	FIG. ITEM
A4J2	9 350
A4J3	9 350
A4L1	9 185
A4P1	9 360
A4P2	9 355
A4Q1	9 126
A4Q2	9 135
A4Q3	9 125
A4Q4	9 135
A4R1	9 55
A4R2	9 55
A4R3	9 325
A4R4	9 55
A4R5	9 325
A4R6	9 330
A4R7	9 55
A4R9	9 295A
A4R10	9 255
A4R11	9 320
A4R12	9 55
A4R13	9 330
A4R14	9 55
A4R15	9 55
A4R16	9 130
A4R17	9 275
A4R18	9 55
A4R19	9 55
A4R20	9 80
A4R21	9 55
A4R22	9 80
A4R23	9 55
A4R24	9 235
A4R25	9 80
A4R26	9 240
A4R27	9 225
A4R28	9 220
A4R29	9 55
A4R30	9 55
A4R31	9 55
A4R32	9 55
A4R33	9 55
A4R34	9 55

EQUIPMENT DESIGNATOR	FIG. ITEM
A4R35	9 55
A4R36	9 55
A4R37	9 55
A4R38	9 55
A4R39	9 55
A4R40	9 55
A4R41	9 55
A4R42	9 55
A4R43	9 55
A4R44	9 55
A4R45	9 155
A4R46	9 160
A4R47	9 80
A4R48	9 55
A4R49	9 55
A4R50	9 55
A4R51	9 55
A4R52	9 55
A4R53	9 165
A4R54	9 255
A4R55	9 205
A4R56	9 305
A4R57	9 305
A4R58	9 305
A4R59	9 190
A4R60	9 165
A4R61	9 175
A4R62	9 235
A4R63	9 195
A4R64	9 200
A4R65	9 300
A4R66	9 55
A4R67	9 120
A4R69	9 55
A4R70	9 55
A4R71	9 71
A4R72	9 80
A4U1	9 65
A4U2	9 70
A4U3	9 75
A4U4	9 85
A4U5	9 90
A4U6	9 100

EQUIPMENT DESIGNATOR	FIG. ITEM
A4U7	9 140
A4U8	9 210
A4U9	9 315
A4U10	9 95
A4U11	9 95
A4U12	9 290
A4U13	9 280
A4U14	9 270
A4U15	9 265
A4U16	9 215
A4U17	9 215
A4U18	9 215
A4U19	9 260
A4U20	9 250
A4U21	9 245
	9 245A
A5	1 95
	5 -1
A5CR1	5 25
	5 25A
A5CR2	5 25
	5 25A
A5CR3	5 25
A5CR4	5 56
A5CR5	5 165
A5CR7	5 25
A5CR8	5 25
A5CR10	5 25
A5CR11	5 25
A5CR12	5 25
A5CR13	5 25
A5CR14	5 25
A5CR15	5 25
A5CR16	5 25
A5CR17	5 25
A5CR18	5 25
A5CR19	5 25
A5CR20	5 25
A5CR22	5 25
A5CR23	5 25
A5CR25	5 25
A5C1	5 90
A5C2	5 5

-Item not Illustrated

EQUIPMENT DESIGNATOR	FIG. ITEM	EQUIPMENT DESIGNATOR	FIG. ITEM	EQUIPMENT DESIGNATOR	FIG. ITEM
A5C2	5 5A	A5R21	5 20	A5R65	5 125
A5C3	5 15	A5R22	5 20	A5R66	5 20
A5C4	5 15	A5R23	5 20	A5R67	5 20
A5C5	5 15	A5R24	5 20	A5R68	5 20
A5C6	5 15	A5R25	5 20	A5R69	5 20
A5C7	5 15	A5R26	5 20	A5R70	5 20
A5C8	5 15	A5R27	5 20	A5R71	5 20
A5C10	5 15	A5R28	5 20	A5R72	5 20
A5C11	5 5	A5R29	5 40	A5R73	5 30
	5 5A	A5R30	5 20	A5R74	5 30
A5C12	5 5	A5R31	5 30	A5R75	5 30
A5C13	5 5	A5R32	5 20	A5R76	5 30
A5C14	5 5	A5R33	5 30	A5R77	5 30
A5C15	5 15	A5R34	5 100	A5R78	5 40
A5C16	5 15	A5R35	5 70	A5R79	5 30
A5C17	5 5	A5R36	5 70		
A5P1	5 205A	A5R37	5 70	A5R80	5 50
A5P2	5 200			A5R81	5 40
A5Q1	5 150	A5R38	5 160	A5R82	5 40
A5Q2	5 140	A5R39	5 145	A5R83	5 40
A5Q3	5 170	A5R40	5 40	A5R84	5 40
		A5R41	5 40	A5R85	5 40
A5Q4	5 10	A5R42	5 40	A5R86	5 185
A5R1	5 30	A5R43	5 95	A5R87	5 190
A5R2	5 30	A5R44	5 40	A5R88	5 30
	5 30A	A5R45	5 50	A5R89	5 180
A5R3	5 30	A5R46	5 40	A5R90	5 175
A5R4	5 20	A5R47	5 40	A5R91	5 30
A5R5	5 20	A5R48	5 70	A5R92	5 57
A5R6	5 20	A5R49	5 70	A5R93	5 60
A5R7	5 30	A5R50	5 50	A5R94	5 30
A5R8	5 20				
A5R9	5 30	A5R51	5 70	A5R95	5 30
A5R10	5 70	A5R52	5 40	A5R96	5 20
A5R11	5 80A	A5R53	5 20	A5U1	5 35
		A5R54	5 20	A5U2	5 35
A5R12	5 85	A5R55	5 20	A5U3	5 65
A5R13	5 105	A5R56	5 30	A5U4	5 55
A5R14	5 115	A5R57	5 120	A5U5	5 35
A5R15	5 110	A5R58	5 40	A5U6	5 35
A5R16	5 80A	A5R59	5 57	A5VR1	5 75
		A5R60	5 57	A5VR2	5 75
A5R17	5 130	A5R61	5 30	A5VR3	5 155
A5R18	5 135	A5R62	5 20	A5VR4	5 45
A5R19	5 80	A5R63	5 20	A6	1 130
A5R20	5 20	A5R64	5 30		6 -1
					6 130E

-Item not Illustrated

EQUIPMENT DESIGNATOR	FIG. ITEM
	6 -1E
	1 130F
	6 -1F
	1 130G
	6 -1G
A6A1	6 5B
	7 -1B
	6 5C
	7 -1C
A6A1AR1	7 210
A6A1CR1	7 60
A6A1CR2	7 60
A6A1CR3	7 60
A6A1CR5	7 60
A6A1CR6	7 60
A6A1CR7	7 60
A6A1C1	7 15
A6A1C2	7 205
A6A1C3	7 45
A6A1C4	7 45
A6A1C5	7 15
A6A1C6	7 230
A6A1C7	7 215
A6A1C8	7 10
A6A1C9	7 195
A6A1C10	7 140
A6A1C11	7 140
A6A1C12	7 140
A6A1C13	7 195
A6A1C14	7 185
A6A1C15	7 110
A6A1C16	7 110
A6A1C17	7 110
A6A1C18	7 110
A6A1C19	7 140
A6A1J1	7 260
A6A1Q1	7 20
A6A1Q2	7 105
A6A1Q3	7 120
A6A1Q4	7 120
A6A1Q5	7 115
A6A1Q6	7 155
A6A1R1	7 31
A6A1R2	7 200
A6A1R3	7 55

EQUIPMENT DESIGNATOR	FIG. ITEM
A6A1R4	7 75
A6A1R5	7 75
A6A1R6	7 50
A6A1R7	7 50
A6A1R8	7 75
A6A1R9	7 30
A6A1R10	7 225
A6A1R11	7 220
A6A1R12	7 225
A6A1R13	7 220
A6A1R14	7 30
A6A1R15	7 65
A6A1R16	7 5
A6A1R17	7 5
A6A1R18	7 5
A6A1R19	7 40
A6A1R20	7 80
A6A1R21	7 190
A6A1R22	7 180
A6A1R23	7 85
A6A1R24	7 100
A6A1R25	7 90
A6A1R26	7 95
A6A1R27	7 90
A6A1R28	7 95
A6A1R29	7 75
A6A1R30	7 35
A6A1R31	7 90
A6A1R32	7 170
A6A1R33	7 175
A6A1R34	7 135
A6A1R35	7 130
A6A1R36	7 125
A6A1R37	7 125
A6A1R38	7 145
A6A1R39	7 150
A6A1R40	7 125
A6A1R41	7 160
A6A1R42	7 35
A6A1U1	7 25
A6A1U2	7 25
A6A1VR1	7 165
A6A2	6 35
	8 -1

EQUIPMENT DESIGNATOR	FIG. ITEM
	6 35
	8 -1A
	6 35B
	8 -1B
A6A2CR1	8 210
A6A2CR2	8 210
A6A2CR2	8 210
A6A2CR4	8 210
A6A2CR5	8 290
A6A2CR6	8 210
A6A2CR7	8 210
A6A2CR8	8 210
A6A2CR9	8 290
A6A2CR10	8 210
A6A2CR11	8 210
A6A2CR12	8 210
A6A2CR13	8 210
A6A2CR14	8 210
A6A2CR15	8 210
A6A2CR16	8 210
A6A2CR17	8 210
A6A2CR18	8 210
A6A2CR19	8 305
A6A2CR20	8 210
A6A2CR21	8 210
A6A2CR22	8 210
A6A2CR23	8 210
A6A2CR24	8 210
A6A2CR25	8 290
A6A2CR26	8 290
A6A2CR27	8 290
A6A2CR28	8 290
A6A2CR29	8 290
A6A2C1	8 280
A6A2C2	8 225
A6A2C3	8 225
A6A2C4	8 280
A6A2C5	8 225
A6A2C6	8 280
A6A2C7	8 225
A6A2C8	8 280
A6A2C9	8 205
A6A2C10	8 225
A6A2C11	8 205
A6A2C12	8 205
A6A2C13	8 205

-Item not Illustrated

EQUIPMENT DESIGNATOR	FIG.	ITEM
A6A2C14	8	205
A6A2C15	8	295
A6A2C16	8	245
A6A2C17	8	245
A6A2C18	8	205
A6A2C19	8	205
A6A2C20	8	205
A6A2C21	8	205
A6A2C22	8	205
A6A2C23	8	225
A6A2C24	8	300
A6A2C25	8	205
A6A2K1	8	255
A6A2P1	8	310
A6A2Q1	8	200
A6A2Q2	8	270
A6A2Q3	8	200
A6A2Q4	8	235
A6A2Q5	8	235
A6A2Q6	8	220
A6A2Q7	8	230
A6A2Q8	8	235
A6A2Q9	8	230
A6A2Q10	8	200
A6A2Q11	8	220
A6A2Q12	8	230
A6A2Q13	8	200
A6A2R1	8	15
A6A2R2	8	15
A6A2R3	8	145
A6A2R4	8	50
A6A2R5	8	145
A6A2R6	8	140
A6A2R7	8	105
A6A2R8	8	135
A6A2R9	8	45
A6A2R10	8	45
A6A2R11	8	45
A6A2R12	8	50
A6A2R13	8	150
A6A2R14	8	155
A6A2R15	8	15
A6A2R16	8	95
A6A2R17	8	95
A6A2R18	8	95
A6A2R19	8	45
A6A2R20	8	95
A6A2R21	8	105
A6A2R22	8	40
A6A2R23	8	95
A6A2R24	8	40
A6A2R25	8	75
A6A2R27	8	75
A6A2R28	8	75
A6A2R29	8	40
A6A2R30	8	5
A6A2R31	8	45
A6A2R32	8	115
A6A2R33	8	45
A6A2R34	8	120
A6A2R35	8	45
A6A2R36	8	140
A6A2R37	8	135
A6A2R38	8	40
A6A2R39	8	95
A6A2R40	8	40
A6A2R41	8	130
A6A2R42	8	110
A6A2R43	8	125
A6A2R44	8	95
A6A2R45	8	45
A6A2R46	8	100
A6A2R47	8	15
A6A2R48	8	15
A6A2R49	8	95
A6A2R50	8	95
A6A2R51	8	75
A6A2R52	8	145
A6A2R53	8	165
A6A2R54	8	15
A6A2R55	8	50
A6A2R56	8	75
A6A2R57	8	195
A6A2R58	8	10
A6A2R59	8	65
A6A2R60	8	60
A6A2R61	8	40
A6A2R62	8	15
A6A2R63	8	5
A6A2R64	8	45
A6A2R65	8	50
A6A2R66	8	35
A6A2R67	8	15
A6A2R68	8	45
A6A2R69	8	75
A6A2R70	8	45
A6A2R71	8	175
A6A2R72	8	185
A6A2R73	8	130
A6A2R74	8	160
A6A2R75	8	40
A6A2R76	8	45
A6A2R77	8	170
A6A2R78	8	75
A6A2R79	8	25
A6A2R80	8	30
A6A2R81	8	45
A6A2R82	8	95
A6A2R83	8	15
A6A2R84	8	20
A6A2R85	8	40
A6A2R86	8	65
A6A2R87	8	70
	8	70A
A6A2R88	8	85
A6A2R89	8	80
A6A2R90	8	180
A6A2R91	8	55
A6A2R92	8	60
A6A2R93	8	185
A6A2R94	8	90
A6A2R95	8	190
A6A2R96	8	45
A6A2R97	8	15
A6A2R98	8	45
A6A2R99	8	95
A6A2R100	8	15
A6A2R101	8	130
A6A2R102	8	5
A6A2U1	8	275
A6A2U2	8	275
A6A2U3	8	265
A6A2U4	8	260

-Item not Illustrated

EQUIPMENT DESIGNATOR	FIG. ITEM
A6A2U5	8 240
A6A2U6	8 240
A6A2U7	8 215
A6A2VR1	8 285
A6A2VR2	8 250
A6A2VR3	8 250
A7	1 266
	12 -1
	1 266A
	12 -1A
A7A1	12 25
A7A1CR1	12 40
A7A1M1	12 35
A7A1M2	12 35
A7A1M3	12 35
A7B1	12 20
A7B2	12 20
A7B3	12 20
A7B4	12 20
A7B5	12 20
A7CR1	12 15
A7CR2	12 15
A7CR3	12 15
A7CR4	12 15
A7CR5	12 15
A7DS1	12 5
A7DS2	12 5
A7DS3	12 10
A7DS4	12 5
A7DS5	12 5
A7DS6	12 5
A7P1	12 65
A7P2	12 70
A7S1	12 60B
	12 60C
A7S2	12 60B
A8	1 315
A8Q1	1 360
A8Q2	1 325
A9	1 275A
	13 1A
A9R1	13 5
A9R2	13 5
A9R3	13 10
	13 10A
	13 10B
	13 10C
	13 10D
	13 10E
	13 10F
A9R4	13 5
A9R5	13 15
	13 15A
	13 15B
	13 15C
	13 15D
	13 15E
	13 15F
	13 15G
A9R6	13 5
	1 145
	1 145A
A10J1	1 170
A10R1	1 160
A10R2	1 160
A10R3	1 160
A10R4	1 160
A10R5	1 160
A10R6	1 165
A10R7	1 165
A10R8	1 165
A10R9	1 165
A10R10	1 165
CR1	1 441
CR2	1 441
C1	1 500
J1	1 435
J2	1 425
J3	1 35
J4	1 45
J5	1 35
J6	1 525
J7	1 75
J8	1 525
J9	1 105
J11	1 525
J12	1 525
K1	1 445
K2	1 445
M1	1 460
T1	1 485
VR1	1 225
VR2	1 185

-Item not Illustrated

PART NUMBER	AIRLINE PART NUMBER	FIG. ITEM	TTL REQ.
AJ3-25		1 25	1
BHGD21T24BLKWS202		12 20	5
BWH1-10PCT (SUPSDS BWH2-7-5PCT)		4 25A	2
BWH2-7-5PCT (SUPSD BY BWH1-10PCT)		4 25	2
CK05BX101K		7 15	2
CK05BX101K (SUPSD BY 300-0241-001)		9 36	1
CK05BX102K		2 320	1
		4 350	2
		9 310	1
CK05BX122K		11 206	1
CK05BX151K		7 185	1
CK05BX221K		7 205	1
		9 105	3
		11 15	2
CK05BX222K		4 100A	1
CK05BX330		3 415	4
		4 380	3
		7 195	2
CK05BX472K		4 75	1
CK05BX561K		7 185	1
CK06BX103K		2 395	6
		4 365	5
		5 90	1
		7 45	2
		8 280	4
		9 50	17
		11 210	2
CK06BX104K		2 350	10
		3 360	15
		4 345	11
		5 15	9
		7 110	4
		8 205	11
		9 110	1
		11 200	2
CK06BX105K		2 400	2
		4 355	10
		5 5	6
		7 140	4
		8 225	6
		11 180	3
CK06BX153K		9 180	1
		11 45	2
CK06BX223K		4 100	1
		11 160	2
CK06BX274K		7 230	1
CK06BX332M		4 305	1
CK06BX393K		7 215	1
CK06BX472K		3 375	1
CK06BX473K		3 195	1
		9 170	2
CK06BX564K		3 370	1
CK06BX684K		7 10	1
		8 295	1
CSR13D686ML		2 50	3
		4 260	3
		8 245	2
CSR13E106KL		9 340	2
CSR13E107KL		2 160	2
		9 345	1
CSR13R226ML		9 145	1
CSR13G104ML		8 300	1
CSR13G475KL (SUPSDS CSR13G475ML)		2 325A	1
CSR13G475ML (SUPSD BY CSR13G475KL)		2 325	1
CSR13G475ML		11 105	2
DH3725CN		12 35	3
DM115		1 220	1
		1 260	1
DPXBMA10634P0101		1 425	1
DPX2MA40P40P34B0115		1 435	1
D704-3		1 -50	6
		1 -80	15
		1 110	6
		1 175	6
D704-3 (SUPSD BY D711-03)		12 -75	21
D711-03 (SUPSDS D704-3)		12 -75A	21
EB1-2-1R5		2 275	1
EB1-2-2R0		2 180	1
G51PA		1 590	AR
		4 460	AR

-Items not Illustrated

PART NUMBER	AIRLINE PART NUMBER	FIG. ITEM	TTL REQ.
GP1PA		5 195	AR
HA2400		9 290	1
JAN1N3595		3 10	8
		11 25	12
JN70Y1280830GT		12 10	1
JN70Y1280830RT		12 5	5
KBP04		2 290	1
K19502A		4 210	1
LH0041G883B		4 315	1
LH2101AD883B		4 375	1
		3 85	1
		7 25	2
LM108H883B		3 190	3
		7 210	1
		11 20	2
LM124D883B		2 45	1
		3 55	6
		4 220	2
		5 65	1
		8 240	2
		11 175	2
LM139D883B		5 35	4
		8 215	1
		11 205	1
LM209K		1 225	1
LM220K12		1 185	1
MC1563G		2 185A	1
MC1563R		2 185	1
MC1569G		2 235A	1
MC1569R		2 235	1
MC668L		2 295	3
		4 230	1
		5 55	1
		8 265	1
MC670L		2 125	2
		8 260	1
MC680L		2 300	1
MMM44SSK		1 35	2
MMT26FB		4 435	2
MM44-22PGDDS		2 430	1
		3 490	1
MN301H		9 280	1

PART NUMBER	AIRLINE PART NUMBER	FIG. ITEM	TTL REQ.
MSPS103C		12 60B	2
(SUPSDS MSPS703C		12 60C	1
MSPS703C SUPSD BY		12 60	2
MSPS103C)		12 60A	1
MS15795-802		1 155	2
		4 450	8
MS15795-803		1 290	4
		1 340	6
		1 375	6
		1 470	2
		1 495	2
		1 520	1
		2 200	2
		2 250	2
		3 525	4
		4 20	4
		6 20	3
		7 255	1
MS15795-803		9 15	2
(SUPSD BY 300-0241-001)			
MS15795-803		10 20	4
MS15795-805		1 200	3
		1 240	3
		4 50	2
MS20426A3-4		1 420	2
MS21042-04		1 330	2
		1 365	2
		1 455	4
		1 465	2
		1 490	2
		1 510	1
		1 535	8
		2 190	2
		2 240	2
		4 15	2
		7 245	1
		12 30	3
MS21042-06		1 195	2
		1 235	2
		4 40	2

-Items not Illustrated

PART NUMBER	AIRLINE PART NUMBER	FIG. ITEM	TTL REQ.
MS21318-1		1 560	2
		1 570	2
MS24693C2		1 320	2
		1 410	6
		1 430	4
		1 440	4
		1 450	4
		1 615	3
MS24693C4		1 585	2
MS24693C5		1 480	2
MS25693C25 (SUPSD BY MS25693C26)		1 550	2
MS24693C26 (SUPSDS MS24693C25)		1 550A	2
MS24693C27		1 605	2
MS35338-135		1 335	2
		1 370	2
		2 195	2
		2 245	2
MS35338-135 (SUPSD BY 300-0241-001)		9 11	2
MS35338-136		1 205	2
		1 245	2
		4 45	2
MS35338-40		1 515	1
		6 15	3
		10 15	4
MS35649-224		4 440	4
MS51957-9		1 270	4
MS51957-12		3 515	2
MS51957-13		1 10	1
		1 60	8
		1 70	8
		1 90	7
		1 100	7
		1 120	3
		1 135	3
		6 10	3
MS51957-13 (SUPSD BY 300-0241-001)		9 10	2
MS51957-13		10 10	4
		3 520	2
		7 245	1
		9 10	2
		10 10	4
		3 520	2
		7 245	1
MS51957-16		1 355	2
		1 390	2
MS51957-17		1 530	8
		2 215	2
		2 265	2
MS51957-2		4 445	4
MS51957-19		4 10	2
MS51957-20		1 125	4
		1 140	4
		1 280	4
MS51957-29		1 190	2
		1 230	2
MS51957-31		4 35	2
NAS1190C04PL		10 25	3
NAS1190C04P4L		4 470	4
		5 210	4
		6 25	3
		8 320	**4**
NAS1190C04P4L (SUPSD BY 300-0241-001)		9 20	2
NAS1190C04P4L		9 365	4
NAS43DD0-32		1 295	4
NAS43DD0-4		1 475	2
		12 55	3
NAS43DD0-6		4 21	2
NAS622CE3		1 600	1
NY04-040		1 345	2
		1 380	2
NY06-040		1 210	2
		1 250	2
		4 55	2
PME55T2-1-00M1		3 285	2
		8 50	4
PME55T2-1-50M1		3 290	2
PME55T2-100M1		2 80	2
PME55T2-2-00M1		3 185	3
PME55T2-3-00M1		7 190	1
PME55T2-4-99M1		7 75	4
PME60T2-100M1		11 35	2

-Items not Illustrated

PART NUMBER	AIRLINE PART NUMBER	FIG. ITEM	TTL REQ.
RCR05G102JS		9 330	2
RCR05G103JS		2 390	11
		2 390A	10
		3 355	18
		4 90	12
		5 50	3
		7 125	3
		8 45	15
		9 55	35
		11 85	10
RCR05G104JS		2 380	3
		3 350	12
		4 250	5
		5 20	28
		7 35	2
		8 95	11
RCR05G105JS		5 57	3
		7 36	1
RCR05G152JS		9 165	2
RCR05G203JS		1 160	5
		2 105	2
		3 365	3
		4 70	2
		5 40	15
		7 145	1
		8 40	8
		9 80	5
		11 190	5
RCR05G204JS		7 160	1
RCR05G274JS		7 150	1
RCR05G303JS		2 375	9
		3 125	1
		3 340	11
		5 70	7
		7 175	1
		8 5	3
		9 175	1
RCR05G332JS		2 106	3
		4 66	3
RCR05G304JS		3 101	1
RCR05G392JS		9 325	2
		5 125	1

PART NUMBER	AIRLINE PART NUMBER	FIG. ITEM	TTL REQ.
RCR05G513JS		2 110	4
		3 80	3
		4 65	3
		5 30	20
		8 15	11
		11 90	5
RCR07G101JS		2 280	1
RCR07G102JS		2 150	1
		3 5	3
		5 180	1
		8 105	2
		11 215	1
RCR07G103JS		3 565	2
		9 305	3
RCR07G104JS		3 575	1
RCR07G105JS		2 330	1
		3 445	6
		4 160	4
		5 190	1
		7 40	1
		8 185	2
		9 200	1
RCR07G106JS		3 460	1
		4 406	1
		7 50	2
		11 40	2
RCR07G122JS		2 5	2
		5 160	1
RCR07G123JS		3 370	1
RCR07G124JS		4 195	1
RCR07G133JS		3 320	4
		9 190	1
		11 95	2
RCR07G135JS		3 380	1
RCR07G152JS		2 115	2
		4 280	2
		8 135	2
RCR07G153JS		2 95	1
		3 560	1
		4 105	2
		9 305	3

-Items not Illustrated

PART NUMBER	AIRLINE PART NUMBER	FIG. ITEM	TTL REQ.
RCR07G154JS		8 190	1
RCR07G155JS		3 30	2
RCR07G163JS		2 415	1
		5 175	1
		8 195	1
RCR07G183JS		4 330	1
		8 20	1
RCR07G184JS		8 100	1
RCR07G202JS		3 200	1
		4 115	2
		9 255	2
		11 125	1
RCR07G204JS		3 405	6
		3 555	2
		7 220	2
		11 50	4
RCR07G205JS		3 220	2
RCR07G221JS (SUPSD BY RCR07G330JS)		9 275	1
RCR07G223JS		11 115	2
RCR07G330JS (SUPSDS RCR07G221JS)		9 275A	1
RCR07G242JS (SUPSD BY RCR)7G681JS)		9 120	1
RCR07G243JS		11 145	2
RCR07G272JS		2 426	1
RCR07G273JS		3 75	1
		9 205	1
RCR07G274JS		9 130	1
		5 130	1
RCR07G3R3JS		4 310	2
RCR07G302JS		2 340	1
		3 395	1
		5 145	1
		9 320	1
RCR07G303JS		9 195	1
RCR07G304JS		2 30	2
		4 255	2
		5 95	1
RCR07G305JS		7 100	1
RCR07G331JS		3 120	1
RCR07G332JS		3 455	1
		4 85	1

PART NUMBER	AIRLINE PART NUMBER	FIG. ITEM	TTL REQ.
RCR07G333JS		2 85	2
RCR07G392JS		2 420	1
		3 485	1
		5 185	1
RCR07G393JS		2 425	1
RCR07G394JS		4 150	1
RCR07G432JS		2 410	1
		3 335	1
		8 180	1
RCR07G433JS		4 420	1
RCR07G435JS		11 75	1
RCR07G473JS		9 300	1
RCR07G512JS		2 155	5
		3 450	2
		3 580	1
		4 110	2
		7 95	2
		8 75	7
		11 195	3
RCR07G513JS		3 585	2
RCR07G514JS		3 175	1
		7 65	1
		8 170	1
RCR07G515JS		3 430	1
		8 90	1
RCR07G562JS		2 120	1
		4 281	1
		8 140	2
RCR07G573JS		5 135	1
RCR07G620JS		2 70	1
		4 120	1
RCR07G623JS		2 35	1
		4 410	3
		5 85	1
RCR07G624JS		8 150	1
RCR07G681JS (SUPSDS RCR07G242JS)		9 120A	1
RCR07G681JS (SUPSDS RN55C6981F		9 295A	1

-Items not Illustrated

PART NUMBER	AIRLINE PART NUMBER	FIG. ITEM	TTL REQ.
RCR07G682JS		2 90	3
		3 420	2
		4 80	1
RCR07G683JS		2 60	1
		5 80	3
		5 80A	1
RCR07G684JS		3 180	1
RCR07G751JS		8 115	1
RCR07G752JS		3 240	1
		4 285	1
		5 100	1
RCR07G754JS		8 160	1
RCR07G822JS		8 120	1
RCR07G910JS		9 220	1
RCR07G911JS		1 165	5
RCR07G912JS		3 90	2
		9 155	1
RCR20G121JS		4 300	2
RCR20G272JS		2 315	1
RCR20G562JS		2 405	1
RNC55H1653FR		4 320	1
RN55C1000F		13 10	1
RN55C1001F		3 40	1
		8 130	3
		13 10F	1
RN55C1002F		3 435	3
		3 595	2
		7 90	3
		11 10	8
		13 5	4
		13 15A	1
RN55C1003F		2 365	4
		3 385	5
		3 535	2
		4 145	2
		5 105	1
		8 145	3
		11 120	9
RN55C1022F		3 160	1
		3 596	AR
RN55C1023F		3 590	1
RN55C1052F		3 597	AR
RN55C1072F		3 95B	1
		3 598	AR
RN55C1102F		3 599	AR
		8 125	1
RN55C1132F		3 600	AR
RN55C1152F		3 601	AR
RN55C1181F		11 220	1
RN55C1182F		3 602	AR
RN55C1212F		3 -603	AR
RN55C1242F		3 -604	AR
RN55C1271F		5 110	1
RN55C1272F		3 -605	AR
RN55C1302F		3 95	3
		3 95A	2
		3 -606	AR
RN55C1332F		3 -607	AR
RN55C1372F		3 480	2
		3 -608	AR
RN55C1402F		3 -609	AR
RN55C1432F		3 295	2
		3 295A	1
		3 -610	AR
		4 190	1
RN55C1472F		3 -611	AR
RN55C1500F		13 10A	1
		13 15	1
		13 15A	1
RN55C1502F		3 -612	AR
RN55C1542F		11 110	2
RN55C1582F		3 470	1
RN55C1652F		3 310	1
RN55C1742F		3 215	2
		11 185	2
RN55C1782F		3 340	1
RN55C1820F		13 10B	1
		13 15B	1
		13 15D	1
RN55C1872F		8 30	1
RN55C1911F		7 200	1
RN55C1912F		11 155	2
RN55C1962F		2 225	2
		8 35	1

-Items not Illustrated

PART NUMBER	AIRLINE PART NUMBER	FIG. ITEM	TTL REQ.
RN55C2001F		3 305	1
RN55C2002F		3 425	5
RN55C2052F		3 130	2
RN55C2152F		4 170	2
RN55C2210F		13 10C	1
		13 15C	1
RN55C2492F		3 390	1
RN55C2552F		3 45	1
		3 45A	2
		3 545	1
		8 65	2
RN55C2740F		13 15E	1
		13 15F	1
RN55C2742F		4 185	1
RN55C2802F		4 155	2
		7 55	1
RN55C2872F		5 120	1
		11 140	1
RN55C3011F		11 225	1
RN55C3012F		7 135	1
RN55C3320F		13 15G	1
RN55C3322F		4 400	1
RN55C3401F		3 110	1
RN55C3402F		4 125	2
RN55C3742F		3 315	1
		4 240	2
RN55C3921F		13 10D	1
RN55C3922F		3 70	1
RN55C4022F		3 465	2
RN55C4322F		8 55	1
RN55C4421F (SUPSD BY 1N750A)		9 285	1
RN55C4422F		3 50	1
		8 175	1
RN55C4872F		3 330	1
RN55C4991F		3 140	2
		8 80	1
		9 225	1
RN55C4992F		3 135	3
		4 246	3
		11 96	4
RN55C5231F		4 405	1
RN55C5232F		2 370	1
RN55C5762F		3 230	1
		11 135	1
RN55C5902F		8 60	2
RN55C6192F		4 205	1
RN55C6341F		2 345	1
		3 150	1
RN55C6342F		3 20	1
		3 270	1
RN55C6491F		2 15	1
RN55C6492F		3 345	1
RN55C6652F		5 60	1
RN55C6810F		13 10E	1
RN55C6811F		2 175	2
		11 5	4
RN55C6981F (SUPSD BY RCR07G681JS)		9 295	1
RN55C7151F		7 170	1
RN55C7502F		3 475	1
		4 140	2
RN55C7680F		3 145	1
RN55C7682F		3 60	1
RN55C7871F		2 10	1
		4 180	1
RN55C8061F		2 20	1
RN55C8861F		3 115	1
RN55C8871F		3 250	1
RN55C8872F		3 35	1
		8 165	1
RN55C9092F		4 175	2
RN55C9310F		3 205	1
RN55C9762F		3 265	1
RN60C1101F		11 165	2
RN60C1103F		3 25	2
RN60C1133F		3 440	1
RN60C1243F		8 85	1
RN60C1373F		3 100	1
RN60C1403F		3 15	1
		3 100A	1
RN60C1503F		11 30	4

-Items not Illustrated

PART NUMBER	AIRLINE PART NUMBER	FIG. ITEM	TTL REQ.
RN60C1543F		3 245	1
		8 155	1
RN60C1583F		7 130	1
RN60C1623F		7 180	1
RN60C1693F		8 10	1
RN60C1743F		3 235	1
RN60C1783F		7 85	1
RN60C1873F		8 110	1
RN60C1913F		11 170	2
RN60C2003F		2 335	2
		3 65	1
		4 135	2
		5 115	1
		8 25	1
RN60C2433F		3 325	1
RN60C2493F		8 70A	1
RN60C2613F		8 70	1
RN60C3013F		3 410	2
		4 325	2
RN60C3323F		7 5	3
RN60C3743F		7 225	2
RN60C4023F		4 130	1
RN60C4223F		7 30	2
		11 100	2
RN60C4533F		7 80	1
RN60C4993F		3 170	1
		4 245	1
RN60C5113F		4 415	1
RN60C8662F		4 165	2
SE555CT		9 210	1
SN54LS08J		9 85	1
SN54LS112J		9 100	1
SN54LS32J		9 75	1
SN54L00J		9 265	1
SN54L03J		9 95	2
SN54L04J		9 65	1
SN54L122J		9 140	1
SN54L20J		9 270	1
SN54L78J		9 90	1
SN54L93J		9 215	3
SN54L96J		9 70	1
SN5407J		9 315	1
SWD100-000		9 185	1
S3-150CRES316		1 -415	1
TA2402A		1 395	2
TY33M		1 285	2
UZ5840		2 145	2
		8 285	1
U2T101		2 285	1
		8 270	1
X463UW33311W2		9 230	1
008129006603002		9 355	1
008129006603003		1 105	1
		12 70	1
008129006610004		1 170	1
008129009603002		2 440	1
008120990603003		1 45	1
008129012603002 (SUPSD BY 300-0241-001)		9 40	2
		9 350	2
008129015603002		4 455	1
008129015603003		1 75	1
		12 65	1
008129015610007		5 200	1
020-0316		4 5	1
03PL105GSN		11 60	2
03PL105JSN		3 155	1
1N3595		2 65	3
		2 65A	2
		4 390	2
		5 56	1
		7 60	1
		8 305	1
1N4001		2 170	2
		9 335	2
1N4448		2 355	43
		2 355A	45
		3 296	1
		4 355	13
		5 25	19
		7 70	5
		8 210	21
		9 60	11
1N645		1 441	2
		4 235	1
		12 15	5
		12 40	1

-Items not Illustrated

PART NUMBER	AIRLINE PART NUMBER	FIG. ITEM	TTL REQ.
1N649		2 140	6
		4 385	6
		5 165	1
		8 290	7
1N750A (SUPSDS RN55C4421F)		9 285A	1
1N751		5 45	1
1N755A		2 100	3
		4 275	3
		5 75	2
		7 165	1
		8 250	2
1N755A(DELETED)		9 115	1
1N914B		3 400	23
		3 400A	22
		3 570	2
		11 80	3
1N965A		5 155	1
1N967B		4 395	1
10-251416-232		1 540	120
10-285404-1S		1 535	4
10-285407-1P		4 460	1
10-285407-1P (SUPSDS 10285407-1)		2 205A	1
10-285407-1P		3 310	1
		9 360	1
10285407-1 (SUPSD BY 10-285407-1P)		5 205	1
137D187X0050W2		2 135	4
1485-4		1 350	1
		1 385	1
		1 505	1
1485-6		1 215	1
		1 255	1
		2 220	1
		2 270	1
150D565X9035B2		9 150	1
151-0090-068		2 360	1
		3 225	2
		4 225	1
2A037		4 30	1
2N2102		2 310	3
2N2222A		3 385	7
		4 270	3
		5 140	1
		7 120	2
		8 235	3
2N2484		2 40	11
		3 105	1
		3 550	2
		4 95	5
		5 150	1
		7 105	1
		8 200	4
		11 70	1
2N2907A (SUPSDS 2N3250)		9 126	1
2N3250		2 25	1
		4 425	2
		5 170	1
		7 115	1
		8 230	3
		9 125	1
2N3441		1 325	1
2N3741		1 360	1
2N4093		2 75	1
		3 300	4
		3 540	2
		4 430	3
		5 10	1
		7 155	1
		8 220	2
		9 135	2
2N5116		3 165	4
		7 20	1
		11 55	1
2500S2A22		1 -40	88
2515		2 205	4
		2 255	4
2829-75-2		2 56	2
		2 136	4
		2 165	2
		3 280	2
		4 215	2
3		1 30	1

-Items not Illustrated

PART NUMBER	AIRLINE PART NUMBER	FIG. ITEM	TTL REQ.
300-0216-001 (SUPSD BY 300-0241-001)		9 30	1
300-0216-002 (SUPSD BY 300-0241-001)		9 35	1
300-0241-001		9 245	1
300-0241-002		9 250	1
300-0241-003		9 260	1
300-0241-004		9 245A	1
316-5106-001		2 305	1
		4 360	2
		8 275	2
3292W1-103		9 160	1
3292W1-104		4 290	1
3292W1-502		2 230	2
		9 240	1
		11 130	2
3292W1-503		4 295	1
		9 235	3
341-0416-001		11 65	3
344-0310-001		11 150	2
3571		4 30	1
422D26		2 130	1
		4 265	1
		8 255	1
431-0196-001		1 150	2
5570		1 485	1
5610-10-32		2 435	2
		3 495	2
5610-53-20		2 210	2
		2 260	2
		8 325	2
5610-58-15		4 36	2
602-1300-001		4 475	1
		5 215	1
		8 315	1
		9 370A	1
602-1710-001		1 405	1
602-1790-001		7 240	1
607-1203-001		1 5	1
612-0097-001		1 400	1
612-0101-001		4 60	1
613-0841-001		12 85	1
614-0440-003		1 15	1
614-0440-004		1 20	1
614-0518-001		12 50	1
614-0519-001		3 500	1
620-1077-001		1 575	1
620-1102-001		1 565	1
620-1102-002		1 565A	1
620-1103-005 (SUPSD BY 620-1103-006)		1 555	1
620-1103-006 (SUPSDS 620-1103-005)		1 555A	1
620-1103-007		1 555B	1
620-1104-001		1 265A	1
620-1104-003		1 265B	1
620-1104-004		1 265C	1
620-1104-007		1 265F	1
620-1104-008		1 265E	1
620-1104-014		1 265	1
620-1104-016		1 265D	1
620IB115YAC20K		1 460	1
623-1710-002 (SUPSD BY 623-1710-003)		3 505	1
623-1710-003 (SUPSDS 623-1710-002)		3 505A	1
623-1711-002		5 220	1
623-1714-004		7 265	1
623-1715-002		8 330	1
623-1716-002		9 375	1
623-1733-001		12 45	1
623-1734-001		11 230	1
623-1736-001 (SUPSD BY 300-0241-001)		9 45	1
623-1757-001		4 480	1
623-1758-003		2 445	1
623-1759-001		1 180	1
623-1789-001		3 620	1
624-0533-001		1 610	3
624-0535-001		7 235	4
		11 226	3
624-0543-001		6 30	3
624-0543-002 (SUPSD BY 300-0216-001)		9 25	2
624-0543-001		10 30	3

-Items not Illustrated

PART NUMBER	AIRLINE PART NUMBER	FIG. ITEM	TTL REQ.
624-0543-004		3 530	2
628E1A505J		2 55	2
		3 275	2
634-1032-001		1 580	1
634-1058-001		9 370	1
637-0326-001		1 595	1
637B1D824		1 500	1
657-0038-001		1 545	1
700-0804-003		1 315	1
722-1757-002(SUPSD BY		1 65	1
722-1757-004)		3 -1	RF
722-1754-003 (SUPSD BY		1 65A	1
722-1754-005)		3 -1A	RF
722-1757-004 (SUPSDS		1 65B	1
722-1757-001)		3 -1B	RF
722-1757-005 (SUPSDS		1 65C	1
722-1757-003)		3 -1C	RF
722-1758-003		1 95	1
		5 -1	RF
722-1758-004		1 95A	1
		5 -1A	RF
722-1761-003 (SUPSD BY		6 5	1
722-1761-005)		7 -1	RF
722-1761-004 (SUPSD BY		6 5A	1
722-1761-006)		7 -1A	RF
722-1761-005 (SUPSDS		6 5B	1
722-1761-003)		7 -1B	RF
722-1761-006 (SUPSDS		7 5C	1
722-1761-004)		7 -1C	RF
722-1762-001		6 35	1
		8 -1	RF
722-1762-002		6 35A	1
		8 -1A	RF
722-1762-003		5 35B	1
		8 -1B	RF
722-1763-004 (SUPSD BY		9 -1	RF
722-1763-007)		10 35	1
722-1763-005 (SUPSD BY		1 115	1
722-1763-008)		9 -1A	RF
722-1763-006 (SUPSD BY		1 115A	1
722-1763-009)		9 -1B	RF
722-1763-007 (SUPSDS		9 -1C	1
722-1763-004)		10 35A	1

PART NUMBER	AIRLINE PART NUMBER	FIG. ITEM	TTL REQ.
722-1763-008 (SUPSDS		1 115C	1
722-1763-005)		9 -1D	RF
722-1763-009 (SUPSDS		1 115D	1
722-1763-006)		9 -1E	RF
722-1770-001 (SUPSD BY		1 275	1
722-1770-002)		13 -1	RF
722-1770-002 (SUPSDS		1 275A	1
722-1770-001)		13 -1A	RF
722-1781-001		12 25	1
722-1782-001		10 5	1
		11 -1	RF
722-1783-003 (SUPSD BY		1 130	1
722-1783-007)		6 -1	RF
722-1783-004 (SUPSD BY		1 130A	1
722-1783-008)		6 -1A	RF
722-1783-005 (SUPSD BY		1 130B	1
722-1783-009)		6 -1B	RF
722-1783-006 (SUPSD BY		1 130C	1
722-1783-010)		6 -1C	RF
722-1783-007 (SUPSDS		1 130D	1
722-1783-003)		6 -1D	RF
722-1783-008 (SUPSDS		1 130E	1
722-1783-004)		6 -1E	RF
722-1783-009 (SUPSDS		1 130F	1
722-1783-005)		6 -1F	RF
722-1783-010 (SUPSDS		1 130G	1
722-1783-006)		6 -1G	RF
722-1784-002 (SUPSD BY		1 115B	1
722-1784-003)		10 -1	RF
722-1783-003 (SUPSDS			
722-1784-002)		1 155E	1
		10 -1A	RF
722-1785-001 (SUPSD BY		9 5	1
300-0241-001)			
722-1798-003		1 85	1
		4 -1	RF
722-1798-004		1 85A	1
		4 -1A	RF
722-1799-004		1 55	1
		2 -1	RF
799-1799-005		1 55A	1
		2 -1A	RF

-Items not Illustrated

PART NUMBER	AIRLINE PART NUMBER	FIG. ITEM	TTL REQ.	PART NUMBER	AIRLINE PART NUMBER	FIG. ITEM	TTL REQ.
722-1802-001		1 145	1				
722-1802-002		1 145A	1				
722-1839-001		3 510	1				
749-0106-012		1 266	1				
		12 -1	RF				
749-0106-013		1 266A	1				
		12 -1A	RF				
7780C3		7 260	1				
		9 371	1				
902-103-11		1 445	2				
965-0376-070		1 -1	RF				
965-0376-071		1 -1A	RF				
965-0376-072		1 -1B	RF				
965-0376-073		1 -1C	RF				
965-0376-079		1 -1E	RF				
965-0376-081		1 -1F	RF				
965-0376-087		1 -1D	RF				

-Items not Illustrated

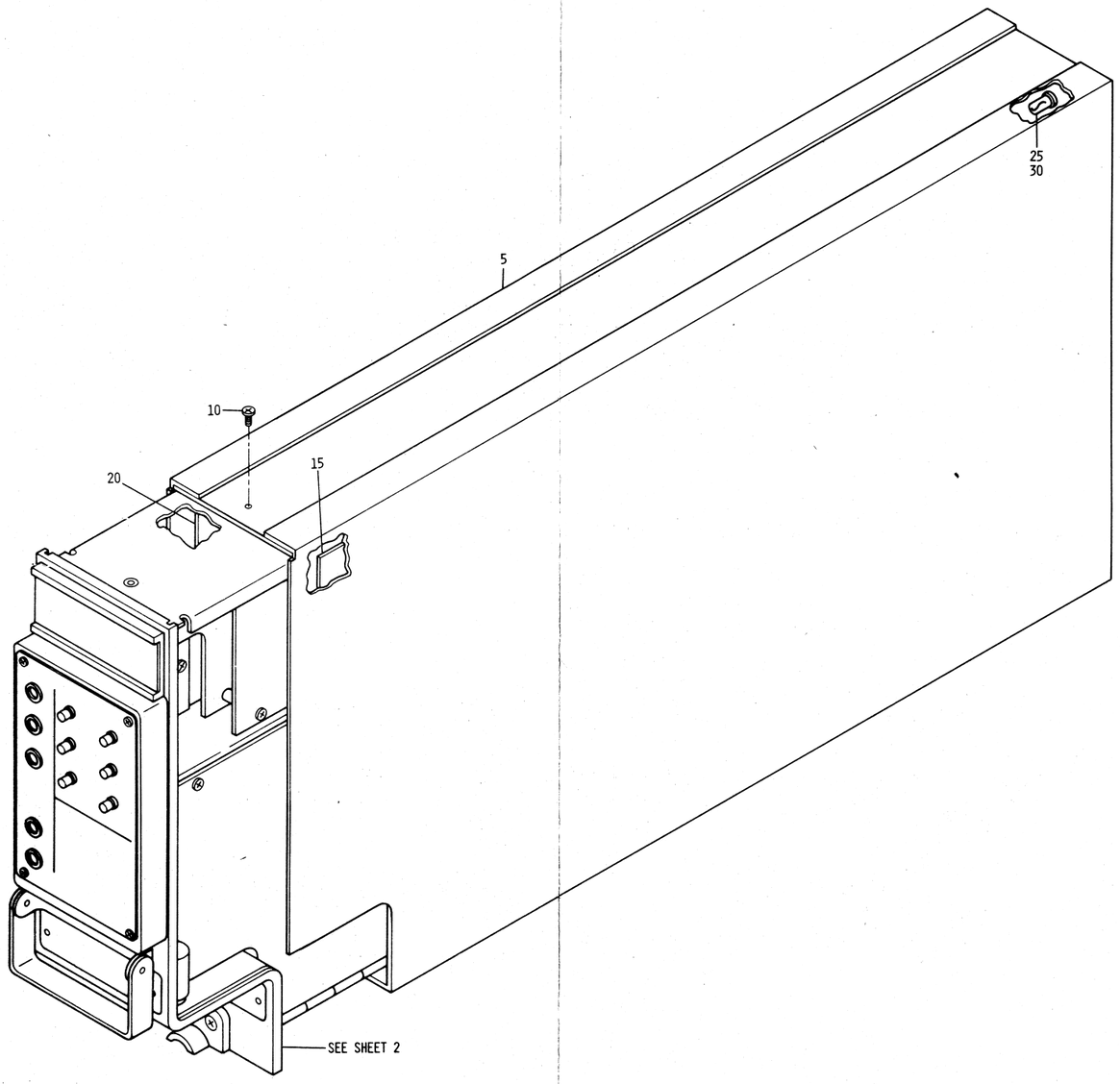

Ground Proximity Warning Computer
Figure 1 (Sheet 1 of 2)

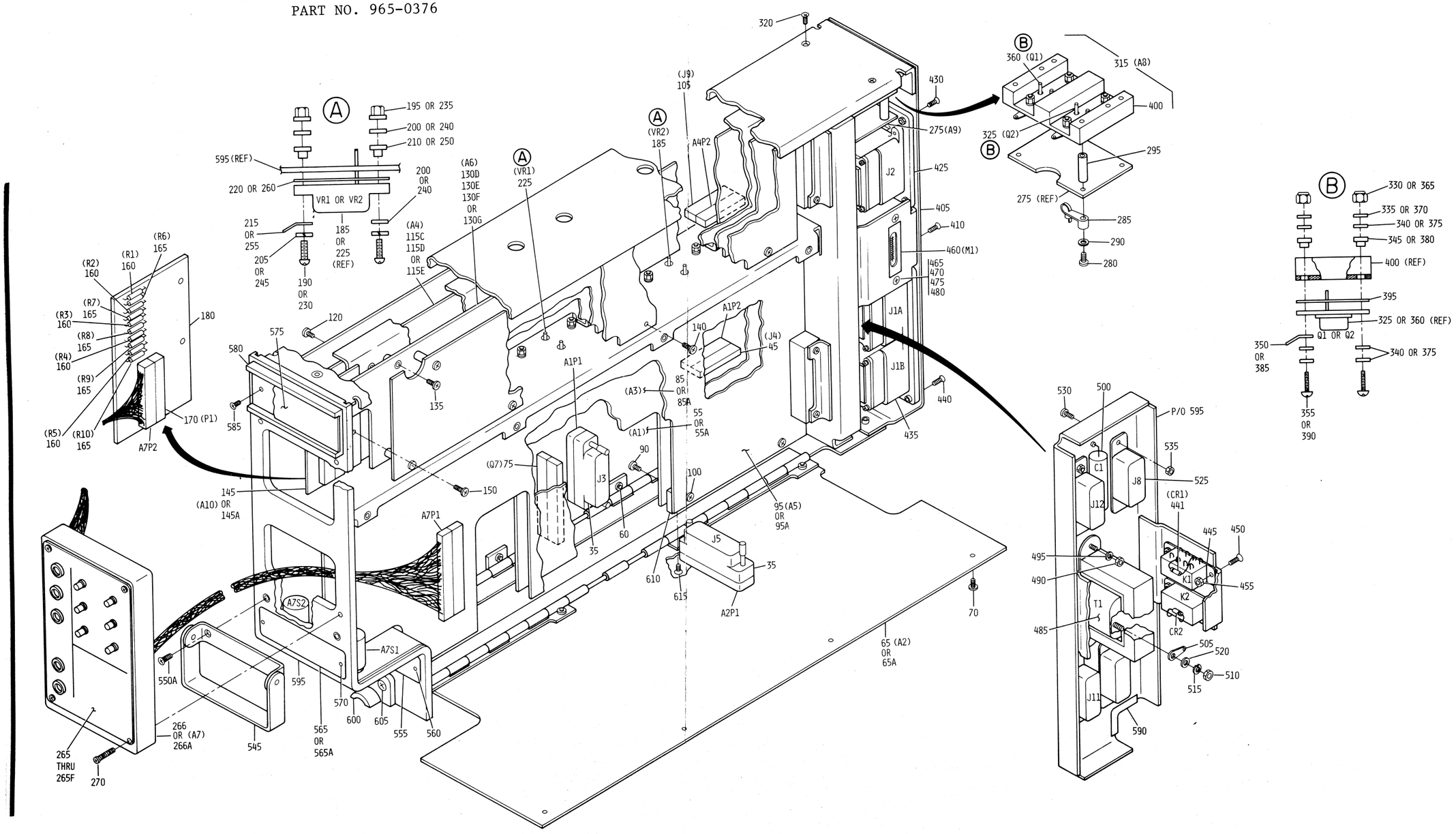

Ground Proximity Warning Computer
Figure 1 (Sheet 2 of 2)

FIG. ITEM	PART NUMBER	AIRLINE PART NUMBER	NOMENCLATURE 1234567	EFF CODE	UNITS PER ASSY
1					
-1	965-0376-070		COMPUTER, GROUND PROXIMITY WARNING	A	RF
-1A	965-0376-071		COMPUTER, GROUND PROXIMITY WARNING	B	RF
-1B	965-0376-072		COMPUTER, GROUND PROXIMITY WARNING	C	RF
-1C	965-0376-073		COMPUTER, GROUND PROXIMITY WARNING	D	RF
-1D	965-0376-087		COMPUTER, GROUND PROXIMITY WARNING	E	RF
-1E	965-0376-079		COMPUTER, GROUND PROXIMITY WARNING	F	RF
-1F	965-0376-081		COMPUTER, GROUND PROXIMITY WARNING	G	RF
5	607-1203-001		. COVER, COMPUTER ATTACHING PARTS		1
10	MS51957-13		. SCREW ***		1
15	614-0440-003		. . INSULATOR		1
20	614-0440-004		. . INSULATOR		1
25	AJ3-25		. . STUD (V72794)		1
30	3		. . RING, RETAINING (V72794)		1
35	MMM44SSK		. CONNECTOR (V95238) (MOUNTING HARDWARE SUPPLIED)		2
-40	2500S2A22		. SOCKET (V95238)		88
45	008129009603 003		. CONNECTOR (V91662)		1
-50	D704-3		. SLEEVE (V08795)		6
55	722-1799-004		. POWER SUPPLY ASSEMBLY (SEE FIG. 2 FOR DETAIL BREAKDOWN)	A,B, C,D, F,G	1
55A	722-1799-005		. POWER SUPPLY ASSEMBLY (SEE FIG. 2 FOR DETAIL BREAKDOWN) ATTACHING PARTS	E	1
60	MS51957-13		. SCREW ***		8
R - 65	722-1757-001		. COMPARATOR AND CLOSURE WARNING ASSEMBLY (PRE SB 6) (SUPSD BY ITEM 65B)	A,B, C,D, F,G	1
R -65A	722-1757-003		. COMPARATOR AND CLOSURE WARNING ASSEMBLY (PRE SB 6) (SUPSD BY ITEM 65C)	E	1

-Items not Illustrated

	FIG. ITEM	PART NUMBER	AIRLINE PART NUMBER	NOMENCLATURE 1234567	EFF CODE	UNITS PER ASSY
R	1 65B	722-1757-004		. COMPARATOR AND CLOSURE WARNING ASSEMBLY (SEE FIG. 3 FOR DETAIL BREAKDOWN)(POST SB 6)(SUPSD ITEM 65)	A,B,C D,F,G	1
R	65C	722-1757-005		. COMPARATOR AND CLOSURE WARNING ASSEMBLY (SEE FIG. 3 FOR DETAIL BREAKDOWN)(POST SB 6)(SUPSDS ITEM 65A)	E	1
	70	MS51957-13		. SCREW * * *		8
	75	008129015603 003		. CONNECTOR (V91662)		1
	-80	D704-03		. SLEEVE (V08795)		15
	85	722-1798-003		. AUDIO ASSEMBLY (SEE FIG. 4 FOR DETAIL BREAKDOWN)	A,B,C D,F,G	1
	85A	722-1798-004		. AUDIO ASSEMBLY(SEE FIG. 4 FOR DETAIL BREAKDOWN) ATTACHING PARTS	E	1
	90	MS51957-13		. SCREW * * *		7
	95	722-1758-003		. MONITOR LOGIC ASSEMBLY(SEE FIG. 5 FOR DETAIL BREAKDOWN)	A,B,C E,F,G	1
	95A	722-1758-004		. MONITOR LOGIC ASSEMBLY (SEE FIG. 5 FOR DETAIL BREAKDOWN) ATTACHING PARTS	D	1
R	100	MS51957-13		. SCREW * * *		7
	105	008129006603003		. CONNECTOR (V91662)		1
	-110	D704-3		. SLEEVE (V08795)		6
R	-115	722-1763-005		. VOICE WARNING ASSEMBLY(PRE SB 8) (SUPSD BY ITEM 115C)	A,B,C, E,G	
R	-115A	722-1763-006		. VOICE WARNING ASSEMBLY(PRE SB 8) (SUPSD BY ITEM 115D)	F	1
R	-115B	722-1784-002		. VOICE WARNING WITH SYNCHRO DEMODULATOR ASSEMBLY(PRE SB 8) (SUPSD BY ITEM 115E)	D	1
R	115C	722-1763-008		. VOICE WARNING ASSEMBLY(SEE FIG. 9 FOR DETAIL BREAKDOWN)(POST SB 8)(SUPSDS ITEM 115)	A,B,C E,G	1
R	115D	722-1763-009		. VOICE WARNING ASSEMBLY(SEE FIG. 9 FOR DETAIL BREAKDOWN)(POST SB 8)(SUPSDS ITEM 115A)	F	1
R	115E	722-1784-003		. VOICE WARNING WITH SYNCHRO DEMODULATOR ASSEMBLY(SEE FIG. 10 FOR DETAIL BREAKDOWN)(POST SB 8)(SUPSDS ITEM 115B)	D	1

-Items not Illustrated

	FIG. ITEM	PART NUMBER	AIRLINE PART NUMBER	NOMENCLATURE 1234567	EFF CODE	UNITS PER ASSY
	1			ATTACHING PARTS		
	120	MS51957-13		. SCREW		3
	-125	MS51957-20		. SCREW		4
				* * *		
R	-130	722-1783-003		. GLIDESLOPE ASSEMBLY (PRE SB 8) (SUPSD BY ITEM 130D)	B,C, D,F	1
R	-130A	722-1783-004		. GLIDESLOPE ASSEMBLY (PRE SB 8) (SUPSD BY ITEM 130E)	A	1
R	-130B	722-1783-005		. GLIDESLOPE ASSEMBLY (PRE SB 8) (SUPSD BY ITEM 1F)	E	1
R	-130C	722-1783-006		. GLIDESLOPE ASSEMBLY (PRE SB 8) (SUPSD BY ITEM 1G)	G	1
R	130D	722-1783-007		. GLIDESLOPE ASSEMBLY(SEE FIG. 6 FOR DETAIL BREAKDOWN)(POST SB 8)(SUPSDS ITEM 130)	B,C, D,F	1
R	130E	722-1783-008		. GLIDESLOPE ASSEMBLY(SEE FIG. 6 FOR DETAIL BREAKDOWN)(POST SB 8)(SUPSDS ITEM 130A)	A	1
R	130F	722-1783-009		. GLIDESLOEP ASSEMBLY(SEE FIG. 6 FOR DETAIL BREAKDOWN)(POST SB 8)(SUPSDS ITEM 130B)	E	1
R	130G	722-1783-010		. GLIDESLOPE ASSEMBLY(SEE FIG. 6 FOR DETAIL BREAKDOWN)(POST SB 8)(SUPSDS ITEM 130C)	G	1
	135	MS51957-13		. SCREW		3
	140	MS51957-20		. SCREW		4
				* * *		
	145	722-1802-001		. EXTERNAL COUNTER DRIVER ASSEMBLY	A,B, D,E,G	1
	145A	722-1802-002		. EXTERNAL COUNTER DRIVER ASSEMBLY	C,F	1
				ATTACHING PARTS		
	150	431-0196-001		. SCREW,MACH,CRS,100°FH,2-56 x 0.187 LG.		2
	155	NOT USED		* * *		
	160	RCR05G203JS		.. RESISTOR,20K,±5%,1/8W		5
	165	RCR07G911JS		.. RESISTOR,910 OHMS,±5%,1/4W	C,F	5
	170	008129006610004		.. CONNECTOR (V91662)		1
	-175	D704-03		.. SLEEVE (V08796)		6

-Items not Illustrated

FIG. ITEM	PART NUMBER	AIRLINE PART NUMBER	NOMENCLATURE 1234567	EFF CODE	UNITS PER ASSY
1					
180	623-1759-001		.. PRINTED WIRING BOARD		1
185	LM220K12		.. REGULATOR, -12 VDC (V27014)		1
			ATTACHING PARTS		
190	MS51957-29		. SCREW		2
195	MS21042-06		. NUT		2
200	MS15795-805		. WASHER		3
205	MS35338-136		. WASHER		2
210	NY06-040		. WASHER, SHOULDER (V08289)		2
215	1485-6		. TERMINAL (V83330)		1
			* * *		
220	DM115		. INSULATOR (V08289)		1
225	LM209K		. REGULATOR, +5 VDC (V27014)		1
			ATTACHING PARTS		
230	MS51957-29		. SCREW		2
235	MS21042-06		. NUT		2
240	MS15795-805		. WASHER		3
245	MS35338-136		. WASHER		2
250	NY06-040		. WASHER, SHOULDER (V08289)		2
255	1485-6		. TERMINAL (V83330)		1
			* * *		
260	DM115		. INSULATOR(V08289)		1
265	620-1104-014		. PLATE, IDENTIFICATION	A	1
265A	620-1104-001		. PLATE, IDENTIFICATION	B	1
265B	620-1104-003		. PLATE, IDENTIFICATION	C	1
265C	620-1104-004		. PLATE, IDENTIFICATION	D	1
265D	620-1104-016		. PLATE, IDENTIFICATION	E	1
265E	620-1104-008		. PLATE, IDENTIFICATION	F	1
265F	620-1104-007		. PLATE, IDENTIFICATION	G	1
266	749-0106-012		. SELF TEST ASSEMBLY (SEE FIG.12 FOR DETAIL BREAKDOWN)	A,B,D E,G	1
266A	749-0106-013		. SELF TEST ASSEMBLY (SEE FIG.12 FOR DETAIL BREAKDOWN)	C,F	1
270	MS51957-9		. SCREW		4
			* * *		
R - 275	722-1770-001		. CODE IDENTIFIER ASSEMBLY (SUPSD BY ITEM 275A)		1
R 275A	722-1770-002		. CODE IDENTIFIER ASSEMBLY (SEE FIG.13 FOR DETAIL BREAKDOWN) (SUPSDS ITEM 275)		1
			ATTACHING PARTS		
280	MS51957-20		. SCREW		4
285	TY33M		. CLAMP (V59730)		2

-Items not Illustrated

	FIG. ITEM	PART NUMBER	AIRLINE PART NUMBER	NOMENCLATURE 1234567	EFF CODE	UNITS PER ASSY
1	290	MS15795-803		. WASHER		4
	295	NAS43DD0-32		. SPACER		4
				* * *		
	300	NOT USED				
	305	NOT USED				
	310	NOT USED				
	315	700-0804-003		. HEATSINK ASSEMBLY		1
				ATTACHING PARTS		
	320	MS24693C2		. SCREW		2
				* * *		
	325	2N3441		.. TRANSISTOR		1
				ATTACHING PARTS		
	330	MS21042-04		.. NUT		2
	335	MS35338-135		.. WASHER		2
	340	MS15795-803		.. WASHER		6
	345	NY04-040		.. WASHER, SHOULDER (V08289)		2
	350	1485-4		.. TERMINAL, LUG (V83330)		1
	355	MS51957-16		.. SCREW		2
				* * *		
	360	2N3741		.. TRANSISTOR		1
				ATTACHING PARTS		
	365	MS21042-04		.. NUT		2
	370	MS35338-135		.. WASHER		2
	375	MS15795-803		.. WASHER		6
	380	NY04-040		.. WASHER,SHOULDER (V08289)		2
	385	1485-4		.. TERMINAL LUG, (V83330)		1
	390	MS51957-16		.. SCREW		2
				* * *		
	395	TA2402A		.. INSULATOR (V08289)		2
	400	612-0097-001		.. HEATSINK		1
	405	602-1710-001		. BRACKET, REAR		1
				ATTACHING PARTS		
R	410	MS24693C2		. SCREW, (V72794)		8
				* * *		
	-415	S3-150CRES316		.. SPRING (V72794)		1
				ATTACHING PARTS		
	-420	MS20426A3-4		.. RIVET		2
	425	DPXBMA10634P0101		. CONNECTOR (V71468)		1
				ATTACHING PARTS		
	430	MS24693C2		. SCREW		4
				* * *		
	435	DPX2MA40P40P34B0115		. CONNECTOR (V71468)		1
				ATTACHING PARTS		
	440	MS24693C2		. SCREW		4
				* * *		

-Items not Illustrated

	FIG. ITEM	PART NUMBER	AIRLINE PART NUMBER	NOMENCLATURE 1234567	EFF CODE	UNITS PER ASSY
	1					
	441	1N645		. DIODE		2
	445	902-103-111		. RELAY (V65035)		2
				ATTACHING PARTS		
	450	MS24693C2		. SCREW		4
	455	MS21042-04		. NUT		4
				* * *		
	460	620IB115VAC20K		. METER, ETI (V18583)		1
				ATTACHING PARTS		
	465	MS21042-04		. NUT		2
	470	MS15795-803		. WASHER		2
	475	NAS43DD0-4		. SPACER		2
	480	MS24693C5		. SCREW		2
				* * *		
	485	5570		. TRANSFORMER (V11537)		1
				ATTACHING PARTS		
	490	MS21042-04		. NUT		2
	495	MS15795-803		. WASHER		2
				* * *		
	500	637B1D824		. CAPACITOR, 0.82 UF, ±20%, 115VAC (V14752)		1
	505	1485-4		. TERMINAL, LUG (V83330)		1
				ATTACHING PARTS		
	510	MS21042-04		. NUT		1
	515	MS35338-40		. WASHER		1
	520	MS15795-803		. WASHER		1
				* * *		
	525	10-285404-1S		. CONNECTOR (V77820)		4
				ATTACHING PARTS		
	530	MS51957-17		. SCREW		8
	535	MS21042-04		. NUT		8
				* * *		
	-540	10-251416-232		. CONTACT (V77820)		120
	545	657-0038-001		. HANDLE		1
				ATTACHING PARTS		
R	550	MS24693C25		. SCREW (SUPSD BY ITEM 550A)		2
R	550A	MS24693C26		. SCREW (SUPSDS ITEM 550)		2
				* * *		
R	555	630-1103-005		. PLATE,PATENT(PRE SB 5)(SUPSD BY ITEM 555A)		1
R	555A	620-1103-006		. PLATE,PATENT(SUPSDS ITEM 555)		1
R	555B	620-1103-007		. PLATE,PATENT(ALT TO ITEM 555A) (POST SB 5)(SUPSDS ITEM 555)		1
				ATTACHING PARTS		
R	560	MS21318-1		. SCREW(USED WITH TIEM 555A)		2
				* * *		

-Items not Illustrated

FIG. ITEM	PART NUMBER	AIRLINE PART NUMBER	NOMENCLATURE 1234567	EFF CODE	UNITS PER ASSY
1					
565	620-1102-001		. PLATE, SELF TEST	A,B,D E,G	1
565A	620-1102-002		. PLATE, SELF TEST	C,F	1
			ATTACHING PARTS		
570	MS21318-1		. SCREW		2
			* * *		
575	620-1077-001		. PLATE, TRADEMARK		1
580	634-1032-001		. HOLDER, TRADEMARK PLATE		1
			ATTACHING PARTS		
585	MS24693C4		. SCREW		2
			* * *		
590	G51PA		. GROMMET (V03296)		AR
595	637-0326-001		. CHASSIS		1
600	NAS622CE3		.. HOOK		1
			ATTACHING PARTS		
605	MS24693C27		.. SCREW		2
			* * *		
610	624-0533-001		.. SPACER		3
			ATTACHING PARTS		
615	MS24693C2		.. SCREW		3
			* * *		

-Items not Illustrated

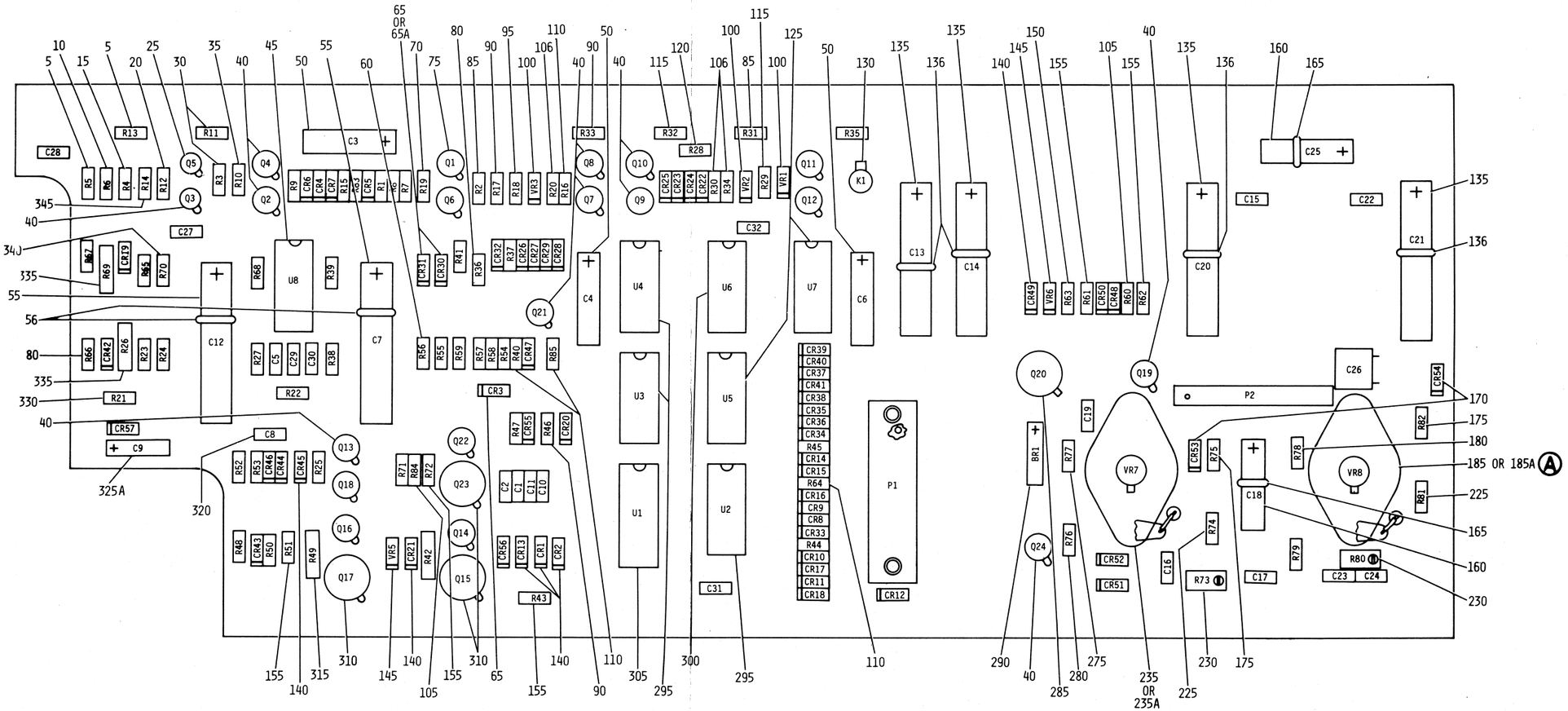

Power Supply Assembly (A1)
Figure 2 (Sheet 1 of 2)

	FIG. ITEM	PART NUMBER	AIRLINE PART NUMBER	NOMENCLATURE 1234567	EFF CODE	UNITS PER ASSY
	2					
	-1	722-1799-004		POWER SUPPLY ASSEMBLY (SEE FIG. 1 FOR NHA)	A,B,C D,F,G	RF
	-1A	722-1799-005		POWER SUPPLY ASSEMBLY (SEE FIG. 1 FOR NHA)	E	RF
	5	RCR07G122JS		. RESISTOR, 1.2K, ±5%, 1/4W		2
	10	RN55C7871F		. RESISTOR, 7.87K, ±1%, 1/10W		1
	15	RN55C6491F		. RESISTOR, 6.49K, ±1%, 1/10W		1
	20	RN55C8061F		. RESISTOR, 8.06K, ±1%, 1/10W		1
	25	2N3250		. TRANSISTOR		1
	30	RCR07G304JS		. RESISTOR, 300K, ±5%, 1/4W		2
	35	RCR07G623JS		. RESISTOR, 62K, ±5%, 1/4W		1
	40	2N2484		. TRANSISTOR		11
	45	LM124D883B		. AMPLIFIER (V27014)		1
	50	CSR13D686ML		. CAPACITOR, 68UF, ±20%, 15VDC		3
	55	628E1A505J		. CAPACITOR, 5UF, ±5%, 50VDC (V14752)		2
				ATTACHING PARTS		
	56	2829-75-2		. STRAP (V98159) ***		2
	60	RCR07G683JS		. RESISTOR, 68K, ±5%, 1/4W		1
	65	1N3595		. DIODE	E	3
	65A	1N3595		. DIODE		2
	70	RCR07G620JS		. RESISTOR, 62 OHMS, ±5%, 1/4W		1
	75	2N4093		. TRANSISTOR		1
	80	PME55T2-100M1		. RESISTOR, 1 MEGOHM, ±1%, 1/8W (V03888)		2
	85	RCR07G333JS		. RESISTOR, 33K, ±5%, 1/4W		2
	90	RCR07G682JS		. RESISTOR, 6.8K, ±5%, 1/4W		3
	95	RCR07G153JS		. RESISTOR, 15K, ±5%, 1/4W		1
	100	1N755A		. DIODE		3
R	105	RCR05G203JS		. RESISTOR, 20K, ±5%, 1/8W		2
R	106	RCR05G332JS		. RESISTOR, 3.3K, ±5%, 1/8W		3
	110	RCR05G513JS		. RESISTOR, 51K, ±5%, 1/8W		4
	115	RCR07G152JS		. RESISTOR, 1.5K, ±5%, 1/4W		2
	120	RCR07G562JS		. RESISTOR, 5.6K, ±5%, 1/4W		1
	125	MC670L		. INTEGRATED CIRCUIT (V04713)		2
	130	422D26		. RELAY (V11532)		1
	135	137D187X0050W2		. CAPACITOR,180 UF,±20%,50 VDC (V56289)		4
				ATTACHING PARTS		
	136	2829-75-2		. STRAP (V98159) * * *		4
	140	1N649		. DIODE		6
	145	UZ5840		. DIODE (V12969)		2

-Items not Illustrated

FIG. ITEM	PART NUMBER	AIRLINE PART NUMBER	NOMENCLATURE 1234567	EFF CODE	UNITS PER ASSY
2					
150	RCR07G102JS		. RESISTOR, 1K, ±5%, 1/4W		1
155	RCR07G512JS		. RESISTOR, 5.1K, ±5%, 1/4W		5
160	CSR13E107KL		. CAPACITOR, 100UF, ±10%, 20VDC		2
			ATTACHING PARTS		
165	2829-75-2		. STRAP (V98159)		2
			***		
170	1N4001		. DIODE		2
175	RN55C6811F		. RESISTOR, 6.81K, ±1%, 1/10W		2
180	EB1-2-2R0		. RESISTOR, 2 OHMS, ±5%, 1/2W (V01121)		1
185	MC1563R		. VOLTAGE REGULATOR (V04713)		1
185A	MC1563G		. VOLTAGE REGULATOR (V04713) (ALT TO ITEM 185)		1
			ATTACHING PARTS		
190	MS21042-04		. NUT (USED WITH ITEM 185)		2
195	MS35338-135		. WASHER (USED WITH ITEM 185)		2
200	MS15795-803		. WASHER (USED WITH ITEM 185)		2
205	2515		. WASHER (V83330) (USED WITH ITEM 185)		4
210	5610-53-20		. WASHER (V86928) (USED WITH ITEM 185)		2
215	MS51957-17		. SCREW (USED WITH ITEM 185)		2
220	1485-6		. LUG, TERMINAL (V83330) (USED WITH ITEM 185)		1
			***		
225	RN55C1962F		. RESISTOR, 19.6K, ±1%, 1/10W		2
230	3292W1-502		. RESISTOR, VARIABLE, 5K, ±10%, 2W (V32997)		2
235	MC1569R		. VOLTAGE REGULATOR (V04713)		1
235A	MC1569G		. VOLTAGE REGULATOR (V04713) (ALT TO ITEM 235)		1
			ATTACHING PARTS		
240	MS21042-04		. NUT (USED WITH ITEM 235)		2
245	MS35338-135		. WASHER (USED WITH ITEM 235)		2
250	MS15795-803		. WASHER (USED WITH ITEM 235)		2
255	2515		. WASHER (V83330) (USED WITH ITEM 235)		4
260	5610-53-20		. WASHER (V86928) (USED WITH ITEM 235)		2
265	MS51957-17		. SCREW (USED WITH ITEM 235)		2
270	1485-6		. LUG, TERMINAL (V83330) (USED WITH ITEM 235)		1
			***		

-Items not Illustrated

FIG. ITEM	PART NUMBER	AIRLINE PART NUMBER	NOMENCLATURE 1234567	EFF CODE	UNITS PER ASSY
2 275	EB1-2-1R5		. RESISTOR,1.5 OHMS,±5%,1/2W (V01121)		1
280	RCR07G101JS		. RESISTOR,100 OHMS,±5%,1/4W		1
285	U2T101		. TRANSISTOR (V12969)		1
290	KBP04		. RECTIFIER (V14936)		1
295	MC668L		. INTEGRATED CIRCUIT (V04713)		3
300	MC680L		. INTEGRATED CIRCUIT (V04713)		1
305	316-5106-001		. INTEGRATED CIRCUIT		1
310	2N2102		. TRANSISTOR		3
315	RCR20G272JS		. RESISTOR,2.7K,±5%,1/2W		1
320	CK05BX102K		. CAPACITOR,0.001 UF,±10%,200VDC		1
R 325	CSR13G475ML		. CAPACITOR,4.7 UF,±20%,50VDC (SUPSD BY ITEM 325A)		1
R 325A	CSR13G475KL		. CAPACITOR,4.7 UF,±10%,50VDC (SUPSDS ITEM 325)		1
330	RCR07G105JS		. RESISTOR,1 MEGOHM,±5%,1/4W		1
335	RN60C2003F		. RESISTOR,200K,±1%,1/8W		2
340	RCR07G302JS		. RESISTOR,3K,±5%,1/4W		1
345	RN55C6341F		. RESISTOR,6.34K,±1%,1/10W		1
350	CK06BX104K		. CAPACITOR,0.1 UF,±10%,100VDC		10
355	1N4448		. DIODE	A,B,C,D,F,G	43
355A	1N4448		. DIODE	E	45
360	151-0090-068		. CAPACITOR,1 UF,±10%,50VDC		1
365	RN55C1003F		. RESISTOR,100K,±1%,1/10W		4
370	RN55C5232F		. RESISTOR,52.3K,±1%,1/10W		1
375	RCR05G303JS		. RESISTOR,30K,±5%,1/8W		9
380	RCR05G104JS		. RESISTOR,100K,±5%,1/8W		3
385	2N2222A		. TRANSISTOR		7
390	RCR05G103JS		. RESISTOR,10K,±5%,1/8W	A,B,C,D,F,G	11
390A	RCR05G103JS		. RESISTOR,10K,±5%,1/8W	E	10
395	CK06BX103K		. CAPACITOR,0.01 UF,±10%,200VDC		6
400	CK06BX105K		. CAPACITOR,1 UF,±10%,50VDC		2
405	RCR20G562JS		. RESISTOR,5.6K,±5%,1/2W		1
410	RCR07G432JS		. RESISTOR,4.3K,±5%,1/4W		1
415	RCR07G163JS		. RESISTOR,16K, ±5%,1/4W		1
420	RCR07G392JS		. RESISTOR,3.9K, ±5%, 1/4W		1
425	RCR07G393JS		. RESISTOR, 39K, ±5%, 1/4W		1
426	RCR07G272JS		. RESISTOR, 2.7K, ±5%, 1/4W		1
430	MM44-22PGDDS		. CONNECTOR (V95238)		1
435	5610-10-32		. WASHER (V86928)		2
440	008129009603 002		. CONNECTOR (V91662)		1
445	623-1758-003		. PRINTED WIRING BOARD		1

-Items not Illustrated

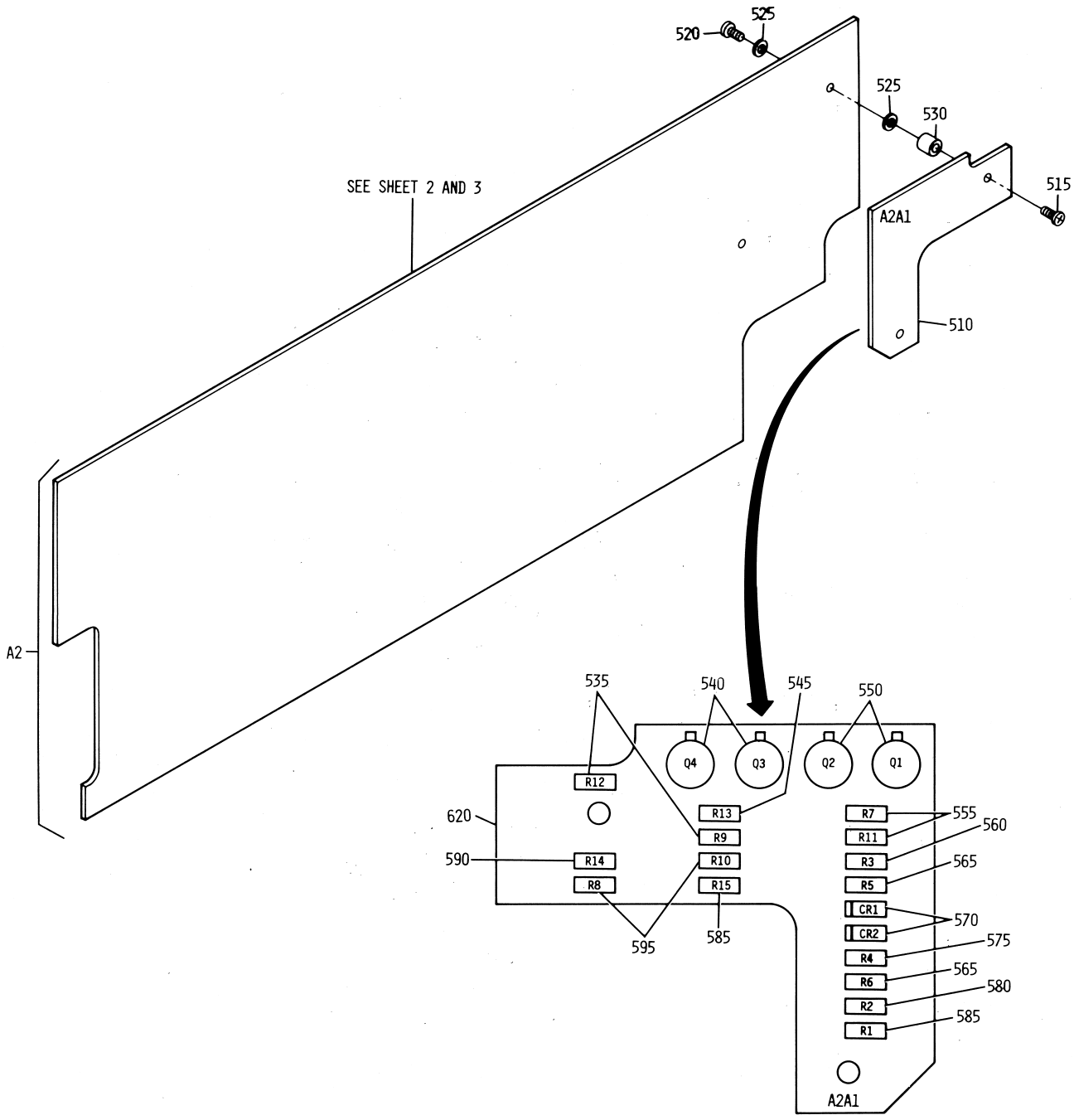

Comparator and Closure
Warning Assembly (A2)
Figure 3 (Sheet 1 of 3)

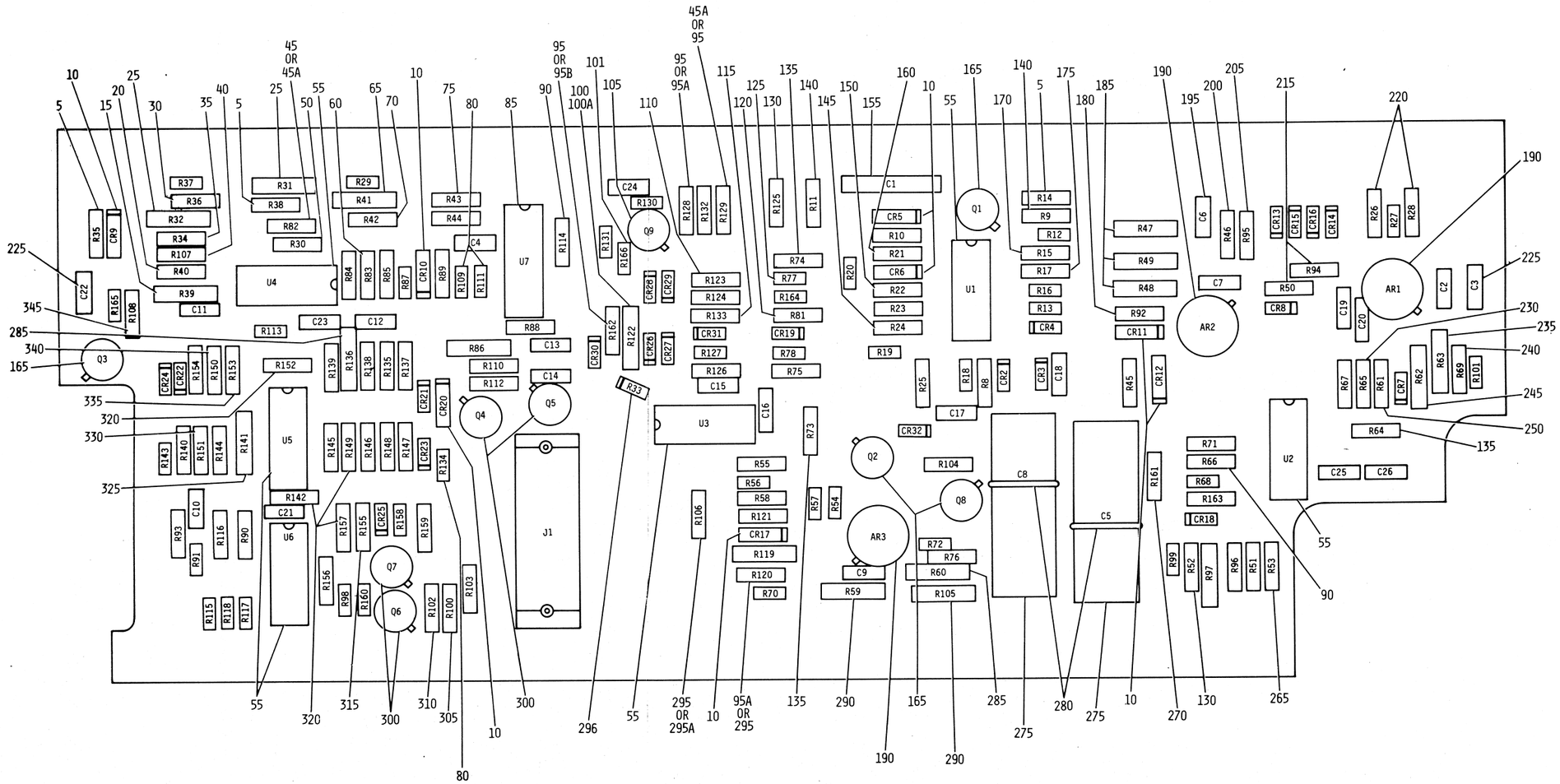

Comparator and Closure
Warning Assembly (A2)
Figure 3 (Sheet 2 of 3)

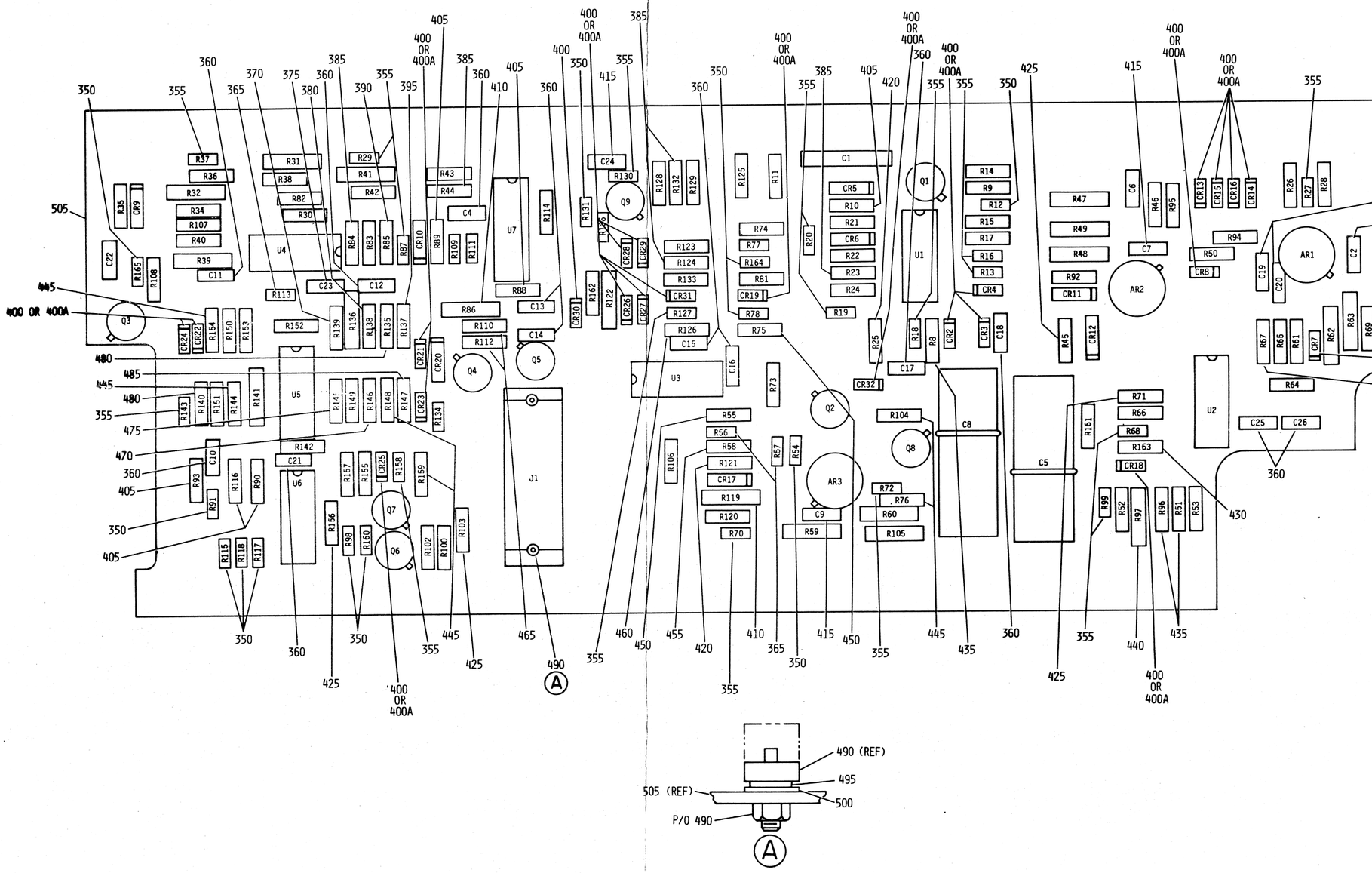

Comparator and Closure
Warning Assembly (A2)
Figure 3 (Sheet 3 of 3)

	FIG. ITEM	PART NUMBER	AIRLINE PART NUMBER	NOMENCLATURE 1234567	EFF CODE	UNITS PER ASSY
R	3 -1	722-1757-001		COMPARATOR AND CLOSURE WARNING ASSEMBLY(SEE FIG. 1 FOR NHA) (PRE SB 6)(SUPSD BY ITEM 1B)	A,B,C D,F,G	RF
R	-1A	722-1757-003		COMPARATOR AND CLOSURE WARNING ASSEMBLY(SEE FIG. 1 FOR NHA) (PRE SB 6)(SUPSD BY ITEM 1C)	E	RF
R	-1B	722-1757-004		COMPARATOR AND CLOSURE WARNING ASSEMBLY(SEE FIG. 1 FOR NHA) (POST SB 6)(SUPSDS ITEM 1)	A,B,C D,F,G	RF
R	-1C	722-1757-005		COMPARATOR AND CLOSURE WARNING ASSEMBLY(SEE FIG. 1 FOR NHA) (POST SB 6)(SUPSDS ITEM 1A)	E	RF
	5	RCR07G102JS		. RESISTOR, 1K, ±5%, 1/4W		3
	10	JAN1N3595		. DIODE		8
	15	RN60C1403F		. RESISTOR, 140K, ±1%, 1/8W		1
	20	RN55C6342F		. RESISTOR, 63.4K, ±1%, 1/10W		1
	25	RN60C1103F		. RESISTOR, 110K, ±1%, 1/8W		2
	30	RCR07G155JS		. RESISTOR,1.5 MEGOHMS,±5%,1/4W		1
	35	RN55C8872F		. RESISTOR,88.7K, ±1%, 1/10W		1
	40	RN55C1001F		. RESISTOR, 1K, ±1%, 1/10W		1
	45	RN55C2552F		. RESISTOR,25.5K,±1%,1/10W A,B,C,D,F,G		1
	45A	RN55C552F		. RESISTOR 25.5K, ±1%,1/10W	E	2
	50	RN55C4422F		. RESISTOR, 44.2K, ±1%, 1/10W		1
	55	LM124D883B		. AMPLIFIER (V27014)		6
	60	RN55C7682F		. RESISTOR, 76.8K, ±1%, 1/10W		1
	65	RN60C2003F		. RESISTOR, 200K, ±1%, 1/8W		1
	70	RN55C3922F		. RESISTOR, 39.2K, ±1%, 1/8W		1
	75	RCR07G273JS		. RESISTOR, 27K, ±5%, 1/4W		1
	80	RCR05G513JS		. RESISTOR, 51K, ±5%, 1/8W		3
	85	LH2010AD883B		. AMPLIFIER (V27014)		1
	90	RCR07G912JS		. RESISTOR, 9.1K,±5%, 1/4W		2
	95	RN55C1302F		. RESISTOR, 13K,±1%,1/10W A,B,C,D,F,G		3
	95A	RN55C1302F		. RESISTOR,13K, ±1%, 1/10W	E	2
R	95B	RN55C1072F		. RESISTOR, 10.7K, ±1%, 1/10W	E	1
R	100	RN60C1373F		. RESISTOR, 137K, ±1%, 1/8W A,B,C,D,F,G		1
R	100A	RN60C1503F		. RESISTOR,150K,±1%, 1/8W	E	1
	101	RCR05G304JS		. RESISTOR, 300K, ±5%, 1/8W		1
	105	2N2484		. TRANSISTOR		1
	110	RN55C3401F		. RESISTOR, 3.4K, ±1%, 1/10W		1
	115	RN55C8661F		. RESISTOR, 8.66K, ±1%, 1/10W		1
	120	RCR07G331JS		. RESISTOR, 330 OHMS ±5%, 1/4W		1
	125	RCR05G303JS		. RESISTOR, 30K, ±5%, 1/8W		1
	130	RN55C2052F		. RESISTOR, 20.5K, ±1%, 1/10W		2
	135	RN55C4992F		. RESISTOR, 49.9K, ±1%, 1/10W		3
	140	RN55C4991F		. RESISTOR, 4.99K, ±1%, 1/10W		2
	145	RN55C7680F		. RESISTOR,768 OHMS,±1%, 1/10W		1

-Items not Illustrated

FIG. ITEM	PART NUMBER	AIRLINE PART NUMBER	NOMENCLATURE 1234567	EFF CODE	UNITS PER ASSY
3 150	RN55C6341F		. RESISTOR, 6.34K, ±1%, 1/10W		1
155	03PL105JSN		. CAPACITOR,1 UF,±5%,30VDC(V12517)		1
160	RN55C1022F		. RESISTOR,10.2K,±1%,1/10W A,B,C,D,F,G		1
	2N5116		. TRANSISTOR		4
170	RN60C4993F		. RESISTOR, 499K, ±1%, 1/8W		1
175	RCR07G514JS		. RESISTOR, 510K, ±5%, 1/4W		1
180	RCR07G684JS		. RESISTOR, 680K, ±5%, 1/4W		1
185	PME55T2-2-00M1		. RESISTOR, 2 MEGOHMS, ±1%, 1/10W (V03888)		3
190	LM108H883B		. AMPLIFIER (V27014)		3
195	CK06BX473K		. CAPACITOR, 0.047UF, ±10%, 100VDC		1
200	RCR07G202JS		. RESISTOR, 2K, ±5%, 1/4W		1
205	RN55C9310F		. RESISTOR, 931 OHMS, ±1%, 1/10W		1
210	NOT USED				
215	RN55C1742F		. RESISTOR, 17.4K, ±1%, 1/10W		2
220	RCR07G205JS		. RESISTOR, 2 MEGOHMS, ±5%, 1/4W		2
225	151-0090-068		. CAPACITOR, 1UF, ±10%, 25VDC		2
230	RN55C5762F		. RESISTOR, 57.6K, ±1%, 1/10W		1
235	RN60C1743F		. RESISTOR, 174K, ±1%, 1/8W		1
240	RCR07G752JS		. RESISTOR, 7.5K, ±5%, 1/4W		1
245	RN60C1543F		. RESISTOR, 154K, ±1%, 1/8W A,B,C,D,F,G		1
250	RN55C8871F		. RESISTOR, 8.87K, ±1%, 1/10W		1
255	NOT USED				
260	NOT USED				
265	RN55C9762F		. RESISTOR, 97.6K, ±1%, 1/10W		1
270	RN55C6342F		. RESISTOR, 63.4K, ±1%, 1/10W		1
275	628E1A505J		. CAPACITOR, 5UF, ±10%, 50VDC (V14752)		2
			ATTACHING PARTS		
280	2829-75-2		. STRAP (V98159)		2
			***		
285	PME55T2-1-00M1		. RESISTOR, 1 MEGOHM, ±1%, 1/10W (V03888)		2
290	PME55T2-1-50M1		. RESISTOR,1.5 MEGOHMS,±1%,1/10W (V03888)		2
R 295	RN55C1432F		. RESISTOR,14.3K,±1%,1/10W A,B,C,D,F,G		2
R 295A	RN55C1432F		. RESISTOR,14.3K,±1%, 1/10W	E	1
R 296	1N4448		. DIODE (POST SB 6)		1
300	2N4093		. TRANSISTOR		4
305	RN55C2001F		. RESISTOR, 2K, ±1%, 1/10W		1
310	RN55C1652F		. RESISTOR, 16.5K, ±1%, 1/10W		1

-Items not Illustrated

FIG. ITEM	PART NUMBER	AIRLINE PART NUMBER	NOMENCLATURE 1234567	EFF CODE	UNITS PER ASSY
3					
315	RN55C3742F		. RESISTOR, 37.4K, ±1%, 1/10W		1
320	RCR07G133JS		. RESISTOR, 13K, ±5%, 1/4W		4
325	RN60C2433F		. RESISTOR, 243K, ±1%, 1/8W		1
330	RN55C4872F		. RESISTOR, 48.7K, ±1%, 1/10W		1
335	RCR07G432JS		. RESISTOR, 4.3K, ±5%, 1/4W		1
340	RN55C1782F		. RESISTOR, 17.8K, ±1%, 1/10W		1
345	RN55C6492F		. RESISTOR, 64.9K, ±1%, 1/10W		1
350	RCR05G104JS		. RESISTOR, 100K, ±5%, 1/8W		12
355	RCR05G103JS		. RESISTOR, 10K, ±5%, 1/8W		18
360	CK06BX104K		. CAPACITOR, 0.1UF, ±10%, 100VDC		15
365	RCR05G203JS		. RESISTOR, 20K, ±5%, 1/8W		3
370	RCR07G123JS		. RESISTOR, 12K, ±5%, 1/4W		1
375	CK06BX472K		. CAPACITOR, 0.0047UF, ±10%, 200VDC		1
380	RCR07G135JS		. RESISTOR, 1.3 MEGOHMS, ±5%, 1/4W		1
385	RN55C1003F		. RESISTOR, 100K, ±1%, 1/10W		5
390	RN55C2492F		. RESISTOR, 24.9K, ±1%, 1/10W		1
395	RCR07G302JS		. RESISTOR, 3K, ±5%, 1/4W		1
400	1N914B		. DIODE	A,B,C,D,F,G	23
400A	1N914B		. DIODE	E	22
405	RCR07G204JS		. RESISTOR, 200K, ±5%, 1/4W		6
410	RN60C3013F		. RESISTOR, 301K, ±1%, 1/8W		2
415	CK05BX330K		. CAPACITOR, 33PF, ±10%, 200VDC		4
420	RCR07G682JS		. RESISTOR, 6.8K, ±5%, 1/4W		2
425	RN55C2002F		. RESISTOR, 20K, ±1%, 1/10W		5
430	RCR07G515JS		. RESISTOR, 5.1 MEGOHMS, ±5%, 1/4W		1
435	RN55C1002F		. RESISTOR, 10K, ±1%, 1/10W		3
440	RN60C1133F		. RESISTOR, 113K, ±1%, 1/8W		1
445	RCR07G105JS		. RESISTOR, 1 MEGOHM, ±5%, 1/4W		6
450	RCR07G512JS		. RESISTOR, 5.1K, ±5%, 1/4W		2
455	RCR07G332JS		. RESISTOR, 3.3K, ±5%, 1/4W		1
460	RCR07G106JS		. RESISTOR, 10 MEGOHMS, ±5%, 1/4W		1
465	RN55C4022F		. RESISTOR, 40.2K, ±1%, 1/10W		2

-Items not Illustrated

	FIG. ITEM	PART NUMBER	AIRLINE PART NUMBER	NOMENCLATURE 1234567	EFF CODE	UNITS PER ASSY
3	470	RN55C1582F		. RESISTOR, 15.8K, ±1%,1/10W		1
	475	RN55C7502F		. RESISTOR, 75K, ±1%, 1/10W		1
	480	RN55C1372F		. RESISTOR, 13.7K, ±1%, 1/10W		2
	485	RCR07G392JS		. RESISTOR, 3.9K, ±5%, 1/4W		1
	490	MM44-22PGDDS		. CONNECTOR (V95238)		1
	495	5610-10-32		. WASHER (V86928)		2
	500	614-0519-001		. INSULATOR		1
R	505	623-1710-002		. PRINTED WIRING BOARD	A,B,C,D,F,G	1
R	505A	623-1710-003		. PRINTED WIRING BOARD	E	1
	510	722-1839-001		. TURBO-PROP ASSEMBLY	E	1
				ATTACHING PARTS		
	515	MS51957-12		. SCREW	E	2
	520	MS51957-13		. SCREW	E	2
	525	MS15795-803		. WASHER	E	4
	530	624-0543-004		. SPACER	E	2
				***		
	535	RN55C1003F		. . RESISTOR, 100K, ±1%, 1/10W	E	2
	540	2N4093		. . TRANSISTOR	E	2
	545	RN55C2552F		. . RESISTOR, 25.5K, ±1%, 1/10W	E	1
	550	2N2484		. . TRANSISTOR	E	2
	555	RCR07G204JS		. . RESISTOR, 200K, ±5%, 1/4W	E	2
	560	RCR07G153JS		. . RESISTOR, 15K, ±5%, 1/4W	E	1
	565	RCR07G103JS		. . RESISTOR, 10K, ±5%, 1/4W	E	2
	570	1N914B		. . DIODE	E	2
	575	RCR07G104JS		. . RESISTOR, 100K, ±5%, 1/4W	E	1
	580	RCR07G512JS		. . RESISTOR, 5.1K, ±5%, 1/4W	E	1
	585	RCR07G513JS		. . RESISTOR, 51K, ±5%, 1/4W	E	2
	590	RN55C1023JS		. . RESISTOR, 102K, ±1%, 1/10W	E	1
	595	RN55C1002F		. . RESISTOR, 10K, ±1%, 1/10W	E	2
				(SELECT FROM THIS AND THE		
				FOLLOWING)		
	-596	RN55C1022F		. . RESISTOR, 10.2K, ±1%, 1/10W	E	AR
	-597	RN55C1052F		. . RESISTOR, 10.5K, ±1%, 1/10W	E	AR
	-598	RN55C1072F		. . RESISTOR, 10.7K, ±1%, 1/10W	E	AR
	-599	RN55C1102F		. . RESISTOR, 11K, ±1%, 1/10W	E	AR
	-600	RN55C1132F		. . RESISTOR, 11.3K, ±1%, 1/10W	E	AR
	-601	RN55C1152F		. . RESISTOR, 11.5K, ±1%, 1/10W	E	AR
	-602	RN55C1182F		. . RESISTOR, 11.8K, ±1%, 1/10W	E	AR
	-603	RN55C1212F		. . RESISTOR, 12.1K, ±1%, 1/10W	E	AR
	-604	RN55C1242F		. . RESISTOR, 12.4K, ±1%, 1/10W	E	AR
	-605	RN55C1272F		. . RESISTOR, 12.7K, ±1%, 1/10W	E	AR
	-606	RN55C1302F		. . RESISTOR, 10K, ±1%, 1/10W	E	AR
	-607	RN55C1332F		. . RESISTOR, 13.3K, ±1%, 1/10W	E	AR
	-608	RN55C1372F		. . RESISTOR, 13.7K, ±1%, 1/10W	E	AR

-Items not Illustrated

FIG. ITEM	PART NUMBER	AIRLINE PART NUMBER	NOMENCLATURE 1234567	EFF CODE	UNITS PER ASSY
3					
-609	RN55C1402F		. . RESISTOR, 14K, ±1%, 1/10W	E	AR
-610	RN55C1432F		. . RESISTOR, 14.3K, ±1%, 1/10W	E	AR
-611	RN55C1472F		. . RESISTOR, 14.7K, ±1%, 1/10W	E	AR
-612	RN55C1502F		. . RESISTOR, 15K, ±1%, 1/10W	E	AR
620	623-1789-001		. . PRINTED WIRING BOARD	E	1

-Items not Illustrated

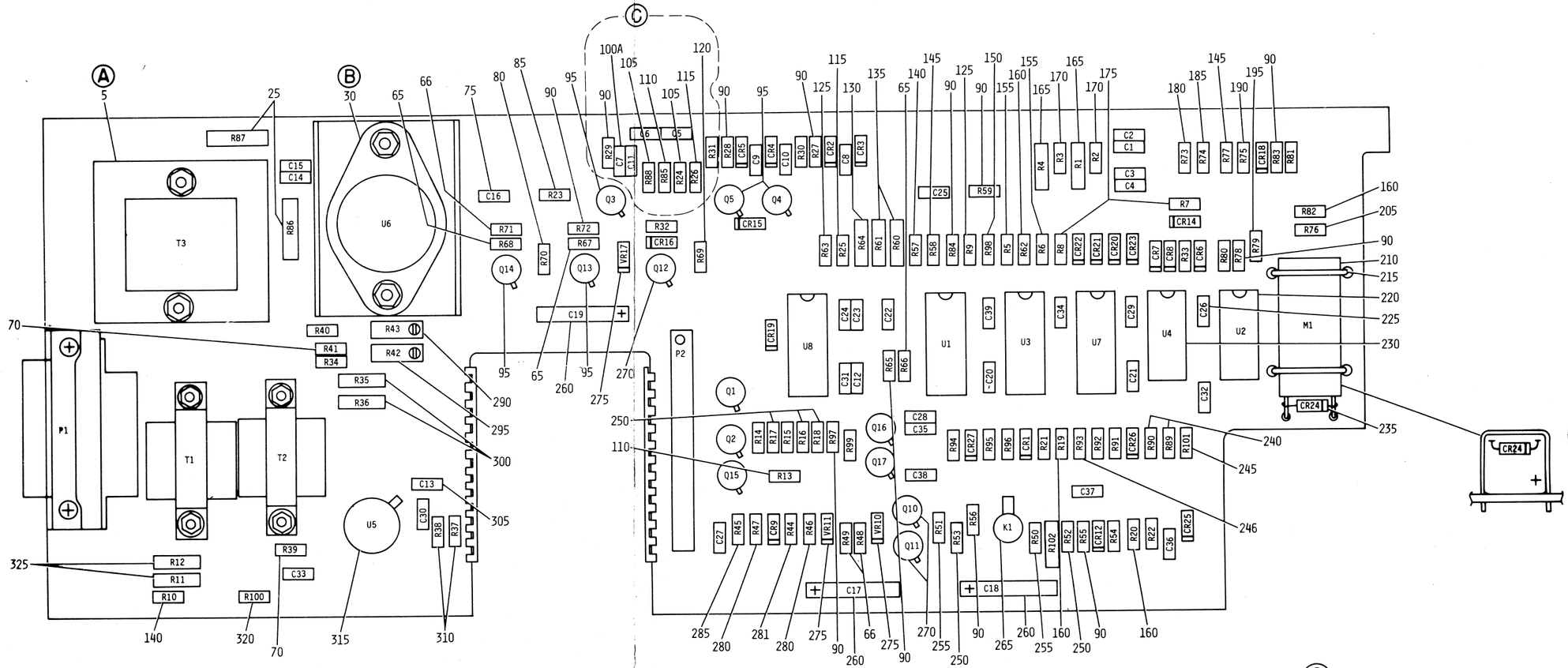

Audio Assembly (A3)
Figure 4 (Sheet 1 of 2)

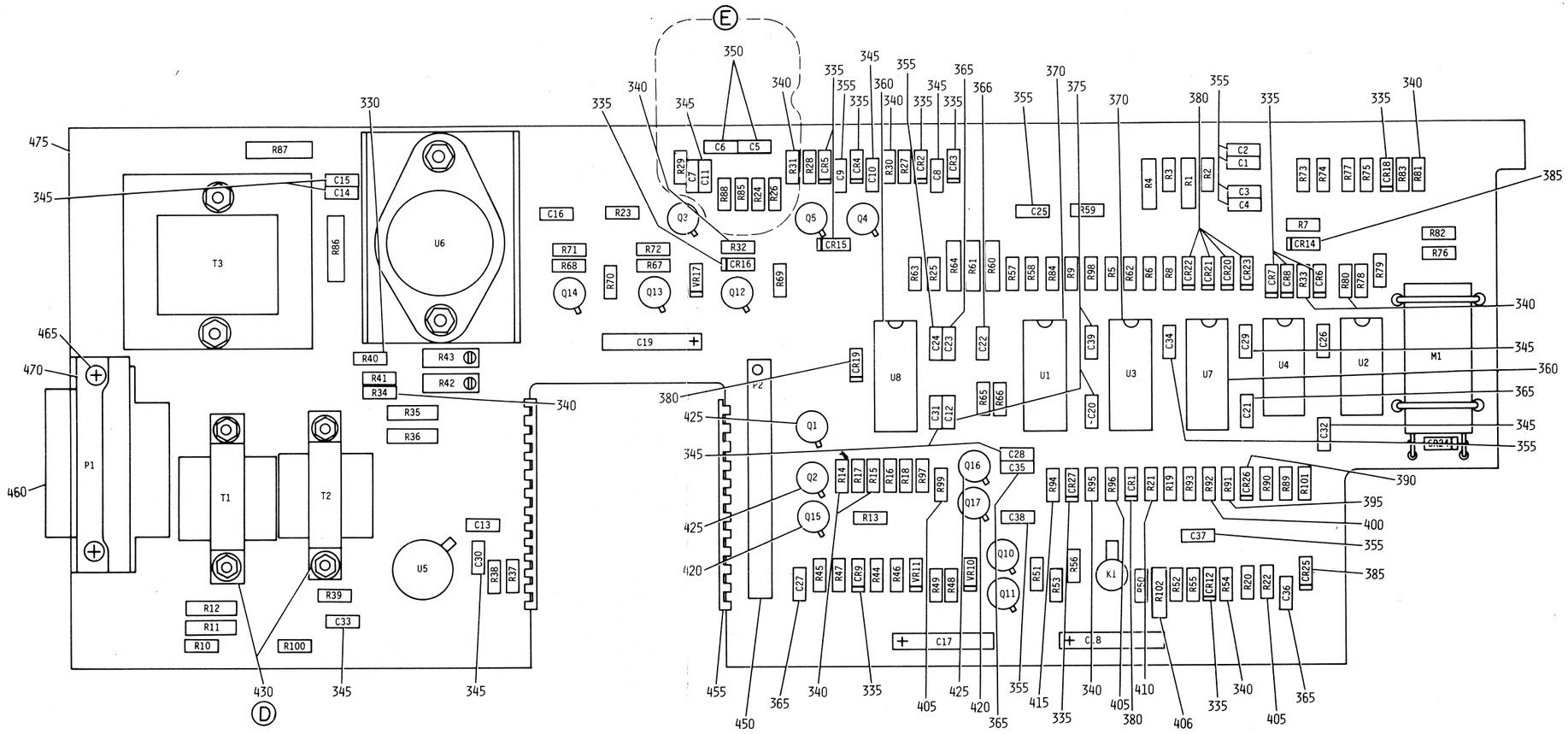

Audio Assembly (A3)
Figure 4 (Sheet 2 of 2)

	FIG. ITEM	PART NUMBER	AIRLINE PART NUMBER	NOMENCLATURE 1234567	EFF CODE	UNITS PER ASSY
	4					
	-1	722-1798-003		AUDIO ASSEMBLY(SEE FIG.1 FOR NHA)	A,B,C D,F,G	RF
	-1A	722-1798-004		AUDIO ASSEMBLY(SEE FIG. 1 FOR NHA)	E	RF
	5	020-0316		. TRANSFORMER, SIGNAL (V83008)		1
				ATTACHING PARTS		
	10	MS51957-19		. SCREW		2
	15	MS21042-04		. NUT		2
	20	MS15795-803		. WASHER		4
	21	NAS43DD0-6		. SPACER		2
				* * *		
R	-25	BWH2-7-5PCT		. RESISTOR, 2.7 OHMS,±5%,2W (V11502)(SUPSD BY ITEM 25A)		2
R	25A	BWH1-10PCT		. RESISTOR, 1 OHM,±10%, 2W (V11502)(SUPSDS ITEM 25)		2
R	30	2A037		. AMPLIFIER (V13919)		1
				ATTACHING PARTS		
	35	MS51957-31		. SCREW		2
	36	5610-58-15		. WASHER (V86928)		2
	40	MS21042-06		. NUT		2
	45	MS35338-136		. WASHER		2
	50	MS15795-805		. WASHER		2
	55	NY06-040		. WASHER, SHOULDER (V08289)		2
				* * *		
	60	612-0101-001		. HEATSINK		1
	65	RCR05G513JS		. RESISTOR, 51K, ±5%, 1/8W		3
R	66	RCR05G332JS		. RESISTOR, 3.3K, ±5%, 1/8W		3
R	70	RCR05G203JS		. RESISTOR, 20K, ±5%, 1/8W		2
	75	CK05BS472K		. CAPACITOR, 0.0047 UF,±10%, 100 VDC		1
	80	RCR07G682JS		. RESISTOR, 6.8K, ±5%, 1/4W		1
	85	RCR07G332JS		. RESISTOR, 3.3K, ±5%, 1/4W		1
	90	RCR05G103JS		. RESISTOR, 10K, ±5%, 1/8W		12
	95	2N2484		. TRANSISTOR		5
	100	CK06BX223K		. CAPACITOR, 0.022 UF, ±10%, 100 VDC (PRE SB 1)		1
	100A	CK05BX222K		. CAPACITOR, 0.0022 UF, ±10%, 100 VDC (POST SB 1)		1
	105	RCR07G153JS		. RESISTOR, 15K, ±5%, 1/4W		2
	110	RCR07G512JS		. RESISTOR, 5.1K, ±5%, 1/10W		2
	115	RCR07G202JS		. RESISTOR, 2K, ±5%, 1/4W		2
	120	RCR07G620JS		. RESISTOR, 62 OHMS, ±5%, 1/4W		1
	125	RN55C3402F		. RESISTOR,34K, ±1%, 1/10W		2
	130	RN60C4023F		. RESISTOR, 402K, ±1%, 1/8W		1
	135	RN60C2003F		. RESISTOR, 200K, ±1%, 1/8W		2
	140	RN55C7502F		. RESISTOR, 75K, ±1%, 1/10W		2

-Items not Illustrated

FIG. ITEM	PART NUMBER	AIRLINE PART NUMBER	NOMENCLATURE 1234567	EFF CODE	UNITS PER ASSY
4					
145	RN55C1003F		. RESISTOR, 100K, ±1%, 1/10W		2
150	RCR07G394JS		. RESISTOR, 390K, ±5%, 1/4W		1
155	RN55C2802F		. RESISTOR, 28K, ±1%, 1/10W		2
160	RCR07G105JS		. RESISTOR, 1 MEGOHMS, ±5%, 1/4W		4
165	RN60C8662F		. RESISTOR, 86.6K, ±1%, 1/8W		2
170	RN55C2152F		. RESISTOR, 21.5K, ±1%, 1/10W		2
R 175	RN55C9092F		. RESISTOR, 90.9K, ±1%, 1/10W		2
180	RN55C7871F		. RESISTOR, 7.87K, ±1%, 1/10W		1
185	RN55C2742F		. RESISTOR, 27.4K, ±1%, 1/10W		1
190	RN55C1432F		. RESISTOR, 14.3K, ±1%, 1/10W		1
195	RCR07G124JS		. RESISTOR, 120K, ±5%, 1/4W		1
200	NOT USED				
205	RN55C6192F		. RESISTOR, 61.9K, ±1%, 1/10W		1
210	K19502A		. COUNTER, EVENT (V44028)	E	1
			ATTACHING PARTS		
215	2829-75-2		. STRAP (V98159)	E	2
			***		
220	LM124D883B		. AMPLIFIER (V27014)		1
225	151-0090-068		. CAPACITOR, 1UF, ±10%, 25VDC		1
230	MC668L		. INTEGRATED CIRCUIT (V04713)		1
235	1N645		. DIODE	E	1
240	RN55C3742F		. RESISTOR, 37.4K, ±1%, 1/10W		2
245	RN60C4993F		. RESISTOR, 499K, ±1%, 1/8W		1
246	RN55C4992F		. RESISTOR, 49.9K, ±1%, 1/10W		1
250	RCR05G104JS		. RESISTOR, 100K, ±5%, 1/8W		5
255	RCR07G304JS		. RESISTOR, 300K, ±5%, 1/4W		2
260	CSR13D686ML		. CAPACITOR, 68UF, ±10%, 15VDC		3
265	422D26		. RELAY (V11532)		1
270	2N2222A		. TRANSISTOR		3
275	1N755A		. DIODE		3
280	RCR07G152JS		. RESISTOR, 1.5K, ±5%, 1/4W		2
281	RCR07G562JS		. RESISTOR, 5.6K, ±5%, 1/4W		1
285	RCR07G752JS		. RESISTOR, 7.5K, ±5%, 1/4W		1
290	3292W1-104		. RESISTOR, VARIABLE, 100K (V32997)		1
295	3292W1-503		. RESISTOR, VARIABLE, 50K (V32997)		1
300	RCR20G121JS		. RESISTOR, 120 OHMS, ±5%, 1/2W		2
305	CK06BX332M		. CAPACITOR, 3300PF, ±10%, 100VDC		1
310	RCR07G3R3JS		. RESISTOR, 3.3 OHMS, ±5%, 1/4W		2

-Items not Illustrated

FIG. ITEM	PART NUMBER	AIRLINE PART NUMBER	NOMENCLATURE 1234567	EFF CODE	UNITS PER ASSY
4					
315	LH0041G883B		. AMPLIFIER (V27014)		1
320	RNC55H1653FR		. RESISTOR, 165K, ±1%, 1/10W		1
325	RN60C3013F		. RESISTOR, 301K, ±1%, 1/8W		2
330	RCR07G183JS		. RESISTOR, 18K, ±5%, 1/4W		1
335	1N4448		. DIODE		13
340	RCR05G303JS		. RESISTOR, 30K, ±5%, 1/8W		11
345	CK06BX104K		. CAPACITOR, 0.1UF, ±10% 100VDC		11
350	CK05BX102K		. CAPACITOR, 0.001UF, ±10%, 100VDC		2
355	CK06BX105K		. CAPACITOR, 1UF, ±10%, 25VDC (POST SB 1)		10
360	316-5106-001		. INTEGRATED CIRCUIT		2
365	CK06BX103K		. CAPACITOR, 0.01UF, ±10%, 200VDC		5
366	CK06BX564K		. CAPACITOR, 0.56UF, ±10%, 50VDC		1
370	LH2101AD883B		. AMPLIFIER (V27014)		2
375	CK05BX330K		. CAPACITOR, 33PF, ±10%, 200VDC		3
380	1N649		. DIODE		6
385	1N3595		. DIODE		2
390	1N967B		. DIODE		1
395	RN55C3322F		. RESISTOR, 33.2K, ±1%, 1/10W		1
400	RN55C5231F		. RESISTOR, 5.23K, ±1%, 1/10W		1
405	RCR07G623JS		. RESISTOR, 62K, ±5%, 1/4W		3
R 406	RCR07G106JS		. RESISTOR,10 MEGOHMS,±5%,1/4W		1
410	RN60C5113F		. RESISTOR, 511K, ±1%, 1/8W		1
415	RCR07G433JS		. RESISTOR, 43K, ±5%, 1/4W		1
420	2N3250		. TRANSISTOR		2
425	2N4093		. TRANSISTOR		3
430	MMT26FB		. TRANSFORMER (V00348)		2
			ATTACHING PARTS		
435	MS35649-224		. NUT		4
440	MS51957-2		. SCREW		4
445	MS15795-802		. WASHER		8
			***		
450	008129015603 002		. CONNECTOR (V91662)		1
455	G51PA		. GROMMET (V03296)		AR
460	10-285407-1P		. CONNECTOR (V77820)		1
			ATTACHING PARTS		
465	NAS1190C04P4L		. SCREW		4
470	602-1300-001		. BRACKET, EXTRACTOR		1
			***		
475	623-1757-001		. PRINTED WIRING BOARD		1

-Items not Illustrated

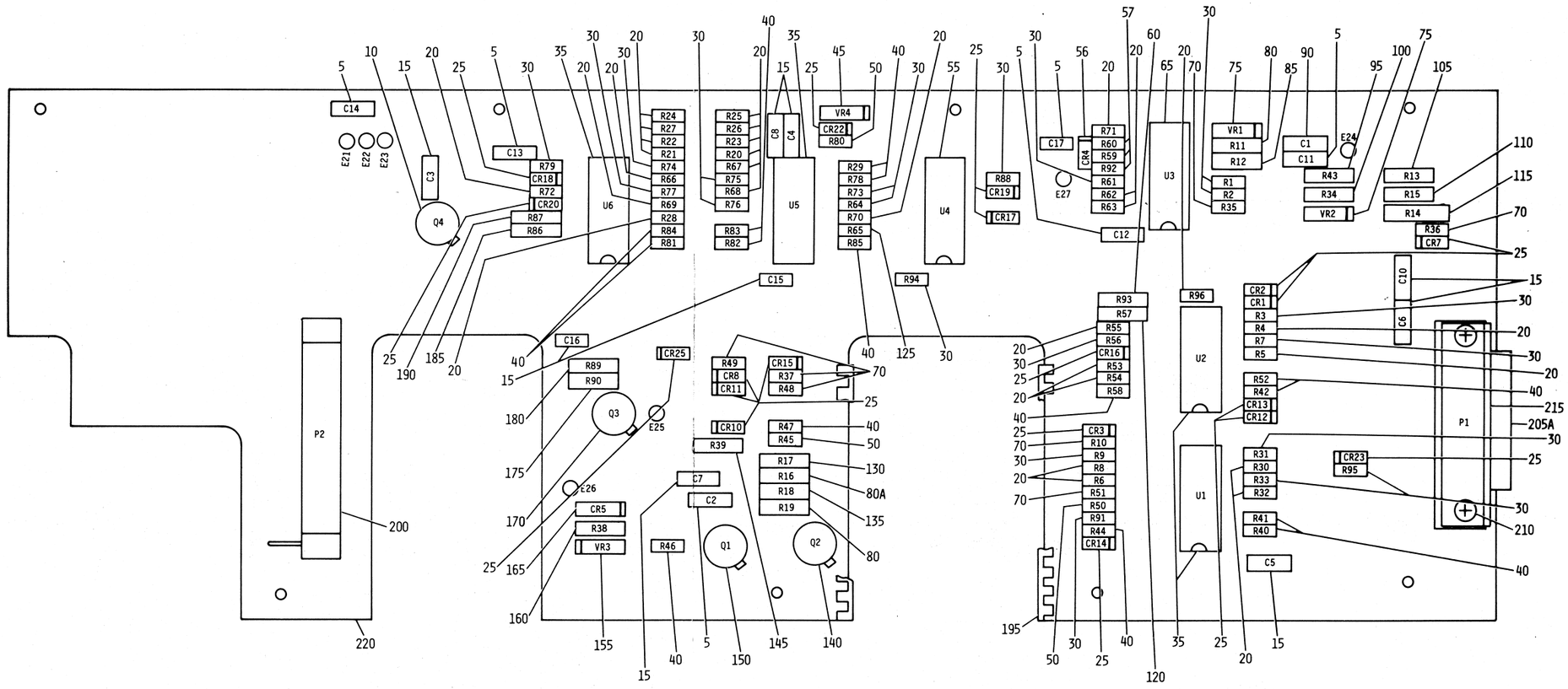

Monitor Logic Assembly (A5)
Figure 5

FIG. ITEM	PART NUMBER	AIRLINE PART NUMBER	NOMENCLATURE 1234567	EFF CODE	UNITS PER ASSY
5					
-1	722-1758-003		MONITOR LOGIC ASSEMBLY (SEE FIG. 1 FOR NHA)	A,B,C E,F,G	RF
-1A	722-1758-004		MONITOR LOGIC ASSEMBLY (SEE FIG. 1 FOR NHA)	D	RF
5	CK06BX105K		. CAPACITOR, 1UF, ±10%, 50VDC		6
10	2N4093		. TRANSISTOR		1
15	CK06BX104K		. CAPACITOR, 0.1UF, ±10%, 100VDC		9
20	RCR05G104JS		. RESISTOR, 100K, ±5%, 1/8W		28
25	1N4448		. DIODE		19
30	RCR05G513JS		. RESISTOR, 51K, ±5%, 1/8W		20
35	LM139D883B		. COMPARATOR (V27014)		4
40	RCR05G203JS		. RESISTOR, 20K, ±5%, 1/8W		15
45	1N751		. DIODE		1
50	RCR05G103JS		. RESISTOR, 10K, ±5%, 1/8W		3
55	MC668L		. INTEGRATED CIRCUIT (V04713)		1
56	1N3595		. DIODE		1
57	RCR05G105JS		. RESISTOR, 1 MEGOHM, ±5%, 1/8W		3
60	RN55C6652F		. RESISTOR, 66.5K, ±1%, 1/8W		1
65	LM124D883B		. AMPLIFIER (V27014)		1
70	RCR05G303JS		. RESISTOR, 30K, ±5%, 1/8W		7
75	1N755A		. DIODE		2
R 80	RCR07G683JS		. RESISTOR, 68K, ±5%, 1/4W		2
R 80A	RCR07G333JS		. RESISTOR, 33K, ±5%, 1/4W		1
85	RCR07G623JS		. RESISTOR, 62K, ±5%, 1/4W		1
90	CK06BX103K		. CAPACITOR, 0.01UF, ±10% 200VDC		1
95	RCR07G304JS		. RESISTOR, 300K, ±5%, 1/4W		1
100	RCR07G752JS		. RESISTOR, 7.5K, ±5%, 1/4W		1
105	RN55C1003F		. RESISTOR, 100K, ±1%, 1/10W		1
110	RN55C1271F		. RESISTOR, 1.27K, ±1%, 1/10W		1
115	RN60C2003F		. RESISTOR, 200K, ±1%, 1/8W		1
120	RN55C2872F		. RESISTOR, 28.7K, ±1%, 1/10W		1
125	RCR05G392JS		. RESISTOR, 3.9K, ±5%, 1/8W		1
130	RCR07G274JS		. RESISTOR, 270K, ±5%, 1/4W		1
135	RCR07G563JS		. RESISTOR, 56K, ±5%, 1/4W		1
140	2N2222A		. TRANSISTOR		1
145	RCR07G302JS		. RESISTOR, 3K, ±5%, 1/4W		1

-Items not Illustrated

	FIG. ITEM	PART NUMBER	AIRLINE PART NUMBER	NOMENCLATURE 1234567	EFF CODE	UNITS PER ASSY
	5					
	150	2N2484		. TRANSISTOR		1
	155	1N965A		. DIODE		1
	160	RCR07G122JS		. RESISTOR, 1.21K, ±5%, 1/4W		1
	165	1N649		. DIODE		1
	170	2N3250		. TRANSISTOR		1
	175	RCR07G163JS		. RESISTOR, 16K, ±5%, 1/4W		1
	180	RCR07G102JS		. RESISTOR, 1K, ±5%, 1/4W		1
	185	RCR07G392JS		. RESISTOR, 3.9K, ±5%, 1/4W		1
	190	RCR07G105JS		. RESISTOR, 1 MEGOHM, ±5%, 1/4W		1
	195	G51PA		. GROMMET (V03296)		AR
	200	0081290156 10007		. CONNECTOR (V31781)		1
R	205	10-285407-1		. CONNECTOR (V77820) (SUPSD BY ITEM 205A)		1
R	205A	10-285407-1P		. CONNECOTR (V77820) (SUPSDS ITEM 205)		1
				ATTACHING PARTS		
	210	NAS1190C04P4L		. SCREW		4
	215	602-1300-001		. BRACKET		1
				* * *		
	220	623-1711-002		. PRINTED WIRING BOARD		

-Items not Illustrated

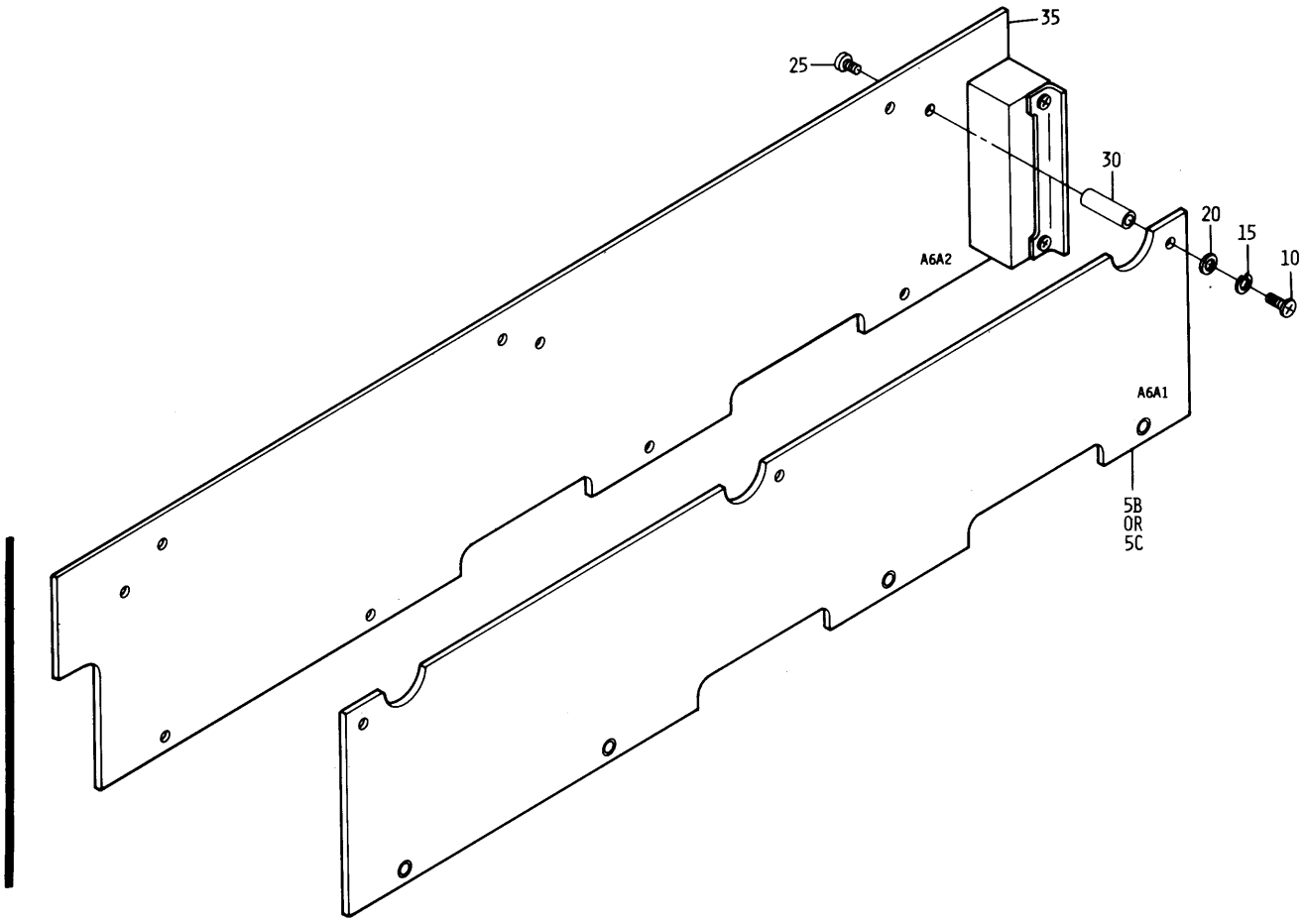

Glideslope Assembly (A6)
Figure 6

	FIG. ITEM	PART NUMBER	AIRLINE PART NUMBER	NOMENCLATURE 1234567	EFF CODE	UNITS PER ASSY
R	6 -1	722-1783-003		GLIDESLOPE ASSEMBLY (SEE FIG. 1 FOR NHA)(PRE SB 8)(SUPSD BY ITEM 1D)	B,C,D F	RF
R	-1A	722-1783-004		GLIDESLOPE ASSEMBLY (SEE FIG. 1 FOR NHA)(PRE SB 8)(SUPSD BY ITEM 1E)	A	RF
R	-1B	722-1783-005		GLIDESLOPE ASSEMBLY (SEE FIG. 1 FOR NHA)(PRE SB 8)(SUPSD BY ITEM 1F)	E	RF
R	-1C	722-1783-006		GLIDESLOPE ASSEMBLY (SEE FIG. 1 FOR NHA)(PRE SB 8)(SUPSD BY ITEM 1G)	G	RF
R	-1D	722-1783-007		GLIDESLOPE ASSEMBLY (SEE FIG. 1 FOR NHA)(POST SB 8)(SUPSDS ITEM 1)	B,C,D F	RF
R	-1E	722-1783-008		GLIDESLOPE ASSEMBLY(SEE FIG. 1 FOR NHA)(POST SB 8)(SUPSDS ITEM 1A)	A	RF
R	-1F	72201783-009		GLIDESLOPE ASSEMBLY (SEE FIG. 1 FOR NHA)(POST SB 8)(SUPSDS ITEM 1B)	E	RF
R	-1G	722-1783-010		GLIDESLOPE ASSEMBLY (SEE FIG. 1 FOR NHA)(POST SB 8)(SUPSDS ITEM 1C)	G	RF
R	-5	722-1761-003		. GLIDESLOPE NO. 2 ASSEMBLY (SEE FIG. 7 FOR DETAIL BREAKDOWN)(PRE SB 8)(SUPSD BY ITEM 5B)	B,C,D F,G	1
R	5A	722-1761-004		. GLIDESLOPE NO. 2 ASSEMBLY(SEE FIG. 7 FOR DETAIL BREAKDOWN) (PRE SB 8)(SUPSD BY ITEM 5C)	A,E	1
R	5B	722-1761-005		. GLIDESLOPE NO. 2 ASSEMBLY(SEE FIG. 7 FOR DETAIL BREAKDOWN) (POST SB 8)(SUPSDS ITEM 5)	B,C,D F,G	1
R	5C	722-1761-006		. GLIDESLOPE NO. 2 ASSEMBLY(SEE FIG. 7 FOR DETAIL BREAKDOWN) (POST SB 8)(SUPSDS ITEM 5A)	A,E	1
				ATTACHING PARTS		
	10	MS51957-13		. SCREW		3
	15	MS35338-40		. WASHER		3
	20	MS15795-803		. WASHER		3
	25	NAS1190C04P4L		. SCREW		3
	30	624-0543-001		. SPACER		3
				* * *		
	35	722-1762-001		. GLIDESLOPE NO. 1 ASSEMBLY(SEE FIG. 8 FOR DETAIL BREAKDOWN)	A,B,C D,F	1

-Items not Illustrated

FIG. ITEM	PART NUMBER	AIRLINE PART NUMBER	NOMENCLATURE 1234567	EFF CODE	UNITS PER ASSY
6					
35A	722-1762-002		. GLIDESLOPE NO. 1 ASSEMBLY (SEE FIG. 8 FOR DETAIL BREAKDOWN)	E	1
35B	722-1762-003		. GLIDESLOPE NO. 1 ASSEMBLY (SEE FIG. 8 FOR DETAIL BREAKDOWN)	G	1

-Items not Illustrated

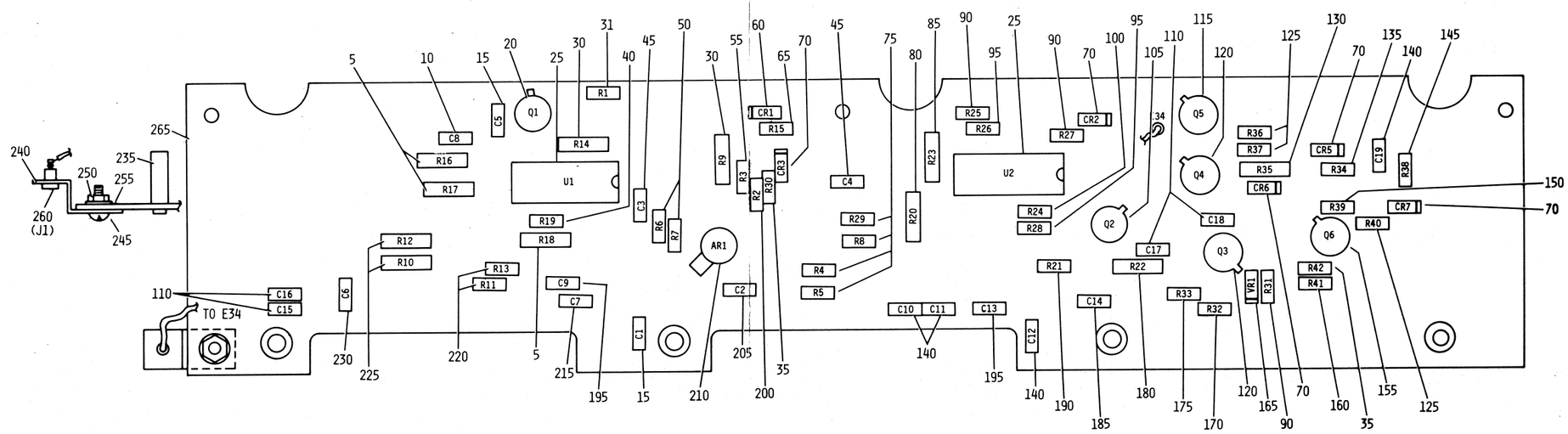

Glideslope No. 2 Assembly (A6A1)
Figure 7

	FIG. ITEM	PART NUMBER	AIRLINE PART NUMBER	NOMENCLATURE 1234567	EFF CODE	UNITS PER ASSY
R	7 -1	722-1761-003		GLIDESLOPE NO.2 ASSEMBLY(SEE FIG 6 FOR NHA)(PRE SB 8)(SUPSD BY ITEM 1B)	B,C,D F,G	RF
R	-1A	722-1761-004		GLIDESLOPE NO.2 ASSEMBLY (SEE FIG. 6 FOR NHA)(PRE SB 8)(SUPSD BY ITEM 1C)	A,E	RF
R	-1B	722-1761-005		GLIDESLOPE NO.2 ASSEMBLY (SEE FIG.6 FOR NHA)(POST SB 8) (SUPSDS ITEM 1)	B,C,D F,G	RF
R	-1C	722-1761-006		GLIDESLOPE NO.2 ASSEMBLY (SEE FIG. 6 FOR NHA)(POST SB 8) (SUPSDS ITEM 1A)	A,E	RF
	5	RN60C3323F		. RESISTOR, 332K, ±1%, 1/8W		3
	10	CK06BX684K		. CAPACITOR,0.68 UF,±10%,200VDC		1
	15	CK05BX101K		. CAPACITOR,100 PF,±10%,200VDC		2
	20	2N5116		. TRANSISTOR		1
	25	LH2101AD883B		. INTEGRATED CIRCUIT(V27014)		2
	30	RN60C4223F		. RESISTOR,422K,±1%, 1/8W		2
R	31	RCR05G105JS		. RESISTOR,1 MEGOHM,±5%,1/8W (POST SB 8)		1
R	35	RCR05G104JS		. RESISTOR,100K±5%,1/8W(SB 8)		2
	40	RCR07G105JS		. RESISTOR,1 MEGOHM,±5%,1/4W		1
	45	CK06BX103K		. CAPACITOR,0.01 UF,±10%,200VDC		2
	50	RCR07G106JS		. RESISTOR, 10 MEGOHMS, ±5%, 1/4W	B,C,D F,G	
	55	RN55C2802F		. RESISTOR,28K,±1%,1/10W		1
	60	1N3595		. DIODE		1
	65	RCR07G514JS		. RESISTOR, 510K, ±5%, 1/4W		1
	70	1N4448		. DIODE		5
	75	PME55T2-4-99M1		. RESISTOR,4.99 MEGOHMS,±1%,1/8(V03888)		4
	80	RN60C4533F		. RESISTOR,453K,±1%, 1/8W		1
	85	RN60C1783F		. RESISTOR,178K, ±1%, 1/8W		1
	90	RN55C1002F		. RESISTOR, 10K, ±1%, 1/10W		3
	95	RCR07G512JS		. RESISTOR,5.1K, ±5%, 1/4W		2
	100	RCR07G305JS		. RESISTOR,3 MEGOHMS,±5%,1/4W		1
	105	2N2484		. TRANSISTOR		1
	110	CK06BX104K		. CAPACITOR,0.1 UF,±10%,100VDC		4
	115	2N3250		. TRANSISTOR		1
	120	2N2222A		. TRANSISTOR		2
	125	RCR05G103JS		. RESISTOR,10K, ±5%, 1/8W		3
	130	RN60C1583F		. RESISTOR,158K, ±1%, 1/8W		1
	135	RN55C3012F		. RESISTOR,30.1K, ±1%, 1/10W		1
	140	CK06BX105K		. CAPACITOR,1 UF,±10%,50 VDC		4
	145	RCR05G203JS		. RESISTOR, 20K, ±5%, 1/8W		1
	150	RCR05G274JS		. RESISTOR, 270K, ±5%, 1/8W		1
	155	2N4093		. TRANSISTOR		1

-Items not Illustrated

FIG. ITEM	PART NUMBER	AIRLINE PART NUMBER	NOMENCLATURE 1234567	EFF CODE	UNITS PER ASSY
7					
160	RCR05G204JS		. RESISTOR, 200K, ±5%, 1/8W		1
165	1N755A		. DIODE		1
170	RN55C7151F		. RESISTOR, 7.15K, ±1%, 1/10W		1
175	RCR05G303JS		. RESISTOR, 30K, ±5%, 1/8W		1
180	RN60C1623F		. RESISTOR, 162K, ±1%, 1/8W		1
185	CK05BX561K		. CAPACITOR, 560PF, ±10%, 200VDC		1
190	PME55T2-3-00M1		. RESISTOR, 3 MEGOHMS, ±1%, 1/8W (V03888)		1
195	CK05BX330K		. CAPACITOR, 33PF, ±10%, 200VDC		2
200	RN55C1911F		. RESISTOR, 1.91K, ±1%, 1/10W		1
205	CK05BX221K		. CAPACITOR, 220PF, ±10%, 200VDC		1
210	LM108H883B		. AMPLIFIER (V27014)		1
215	CK06BX393K		. CAPACITOR, 0.039UF, ±10%, 100VDC		1
220	RCR07G204JS		. RESISTOR, 200K, ±5%, 1/4W	B,C,D,F,G	2
225	RN60C3743F		. RESISTOR, 374K, ±1%, 1/8W		2
230	CK06BX274K		. CAPACITOR, 0.27UF, ±10%, 50VDC		1
235	624-0535-001		. SPACER		4
240	602-1790-001		. BRACKET		1
			ATTACHING PARTS		
245	MS51957-13		. SCREW		1
250	MS21042-04		. HUT		1
255	MS15795-803		. WASHER		1
260	7780C3		. JACK (V15849)		1
265	623-1714-004		. PRINTED WIRING BOARD		1

-Items not Illustrated

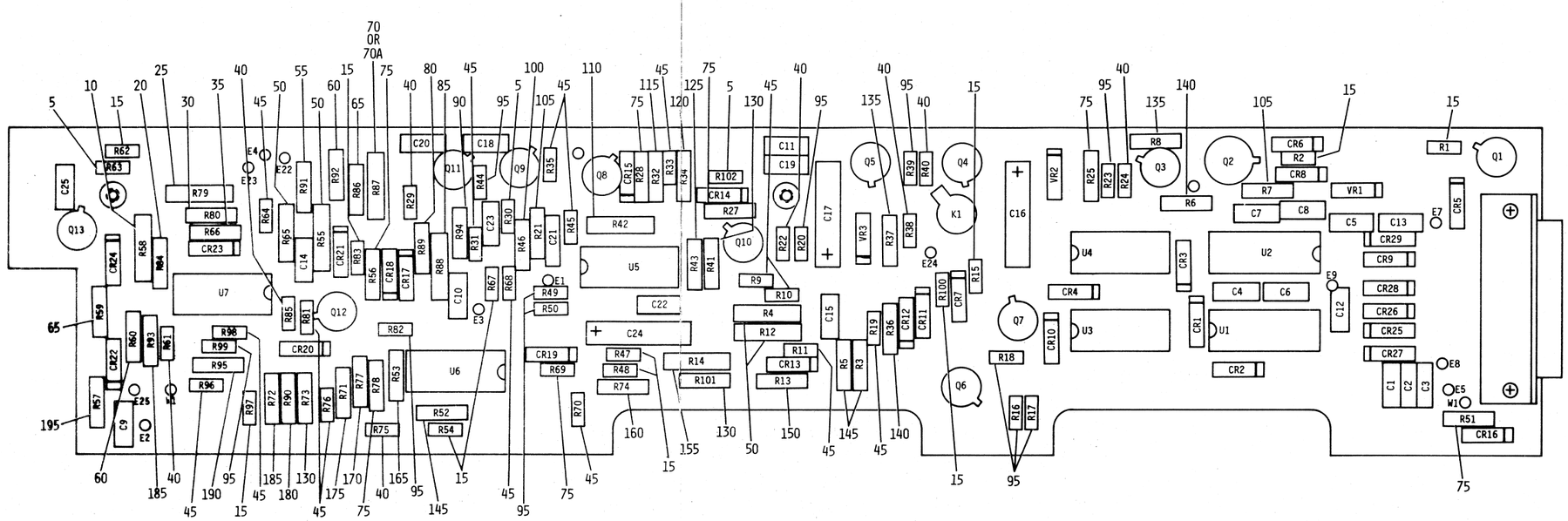

Glideslope No. 1 Assembly (A6A2)
Figure 8 (Sheet 1 of 2)